2013 PRICELIST

THE LIVING

CLASSIC COLLECTION

VISMARADESIGN®

La Vismara Design si risera di apportare in qualsiasi momento e senza preavviso modifiche estetiche e tecniche al prodotto, atte a migliorarlo.

Vismara Design reserves any time and without warning the right to make any technical and aesthetical changes suitable to improve the products.

Фабрика Vismara Design оставляет за собой право в любое время и без предупреждения вносить эстетические и технические изменения изделия, направленные на его улучшения.

Eventuali leggere differenze sulla tonalità delle finiture, devono essere accettate, in quanto si tratta di lavorazioni artigianali realizzate a mano. Dovranno essere accettate anche differenze di colorazione e venatura delle essenze di legno in quanto prodotto naturale.

Possible differences in color shades of finishings have to be accepted, as it comes to handmade, handicraft works.
Also differences in colours and veinings of the wood have to be accepted, since it comes to a natural product.

Возможные незначительные различия в тональности отделки должны быть приняты, так как речь идёт о ремесленных работах, выполненных вручную. Должны быть приняты также различия в цвете и расположении прожилок дерева, так как это натуральный продукт.

Piccole cicatrici, graffi o imperfezioni (sempre presenti nella pelle animale) non possono e non devono essere considerati difetti, ma caratteristica e pregio della vera pelle naturale di qualità. Queste imperfezioni sono molto piu visibili nelle pelli di maggior pregio, quali nabuk e pelli all'anilina (toledo), in quanto generalmente trattate con rifinizioni poco o nulla coprenti.

Minor scars, imperfetions and flaws (always present on animal hides) are not to be considered defects but distinctive characteristics that add uniqueness and value to real, natural and quality hides. These imperfetions are always evident on hides of the best quality, like nabuk and anilin leather (toledo), because they are less treated than the other.

Небольшие шрамы, царапины и несовершенства на коже (всегда присутствующие на коже животных) не могут и не должны рассматриваться как дефекты, это характеристика и ценность натуральной кожи высокого качества. Эти несовершенства гораздо более заметны на ценных кожах, таких как набук и анилин-коже (Toledo), выделанных и обработанных практически без покрытия или малом его количестве.

VISMARADESIGN®

INDICE - INDEX

MOSAIK	01	>	33
BAROQUE	34	>	71
ART DECO	72	>	109
CLASSIC	110	>	147
GLASS EYES	148	>	185
GOLD/SILVER EYES	186	>	223
PIRAMID	224	>	262
MODERN	263	>	298
ALTRO-OTHER	299	>	330

DIVANI & POLTRONE - ACCESSORI - PORTA CD/DVD -
SOFAS & ARMCHAIRS - ACCESSORIES - CD/DVD RACKS

VISMARADESIGN®

TV - LIFT & FIRE - 158 - MOSAIK

Struttura per Home Cinema - a parete (con salita TV motorizzata computerizzata e telecomandata - completo di Bio-Camino ecologico)
Home Cinema - Wall Rack (motorized, computerized and remote-controlled TV lift system - provided with ecological bio-fireplace)

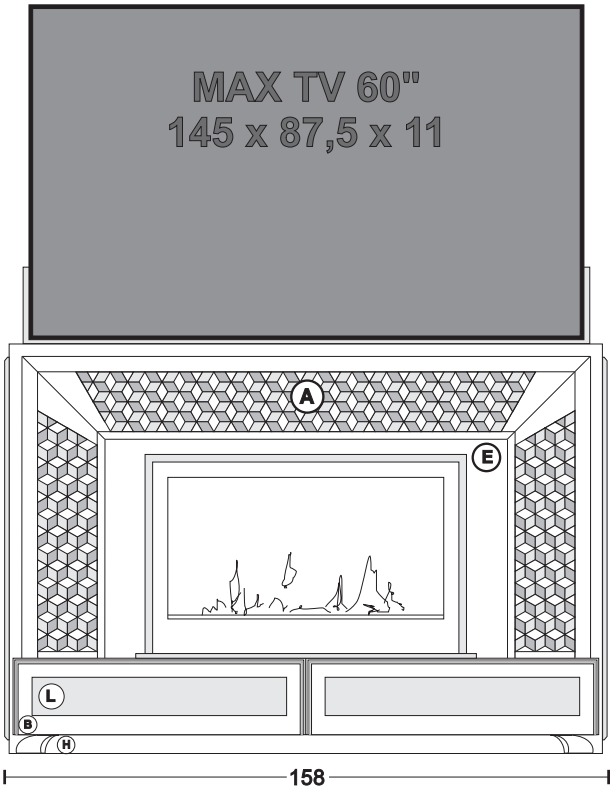

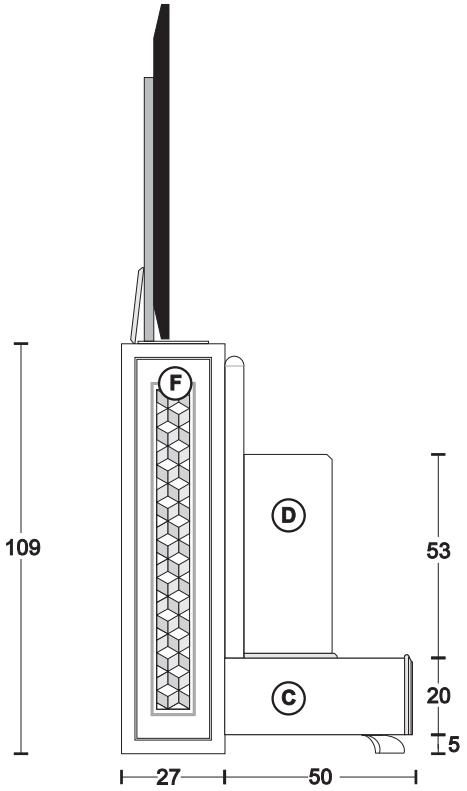

Finiture e combinazioni - Finishings and combinations

A + F Bianco/Nero/Crema opaco
Mosaik: Bianco+Argento+Argento rosato
Mosaik: Argento Foglia+Argento Foglia 2+Oro Foglia
(Opaque White/Black/Cream-Mosaik: White+Silver foil+pinkish silver)
(Opaque White/Black/Cream-Mosaik: Silver foil+Silver foil2+Gold foil)

B + C + D + E Bianco/Nero/Crema opaco - decorazioni Oro/Argento foglia
(opaque White/Black - Gold/Silver foil decorations)

H Argento/Oro foglia
(Silver/Gold foil)

L Vetri:Bianco/Fume
(glass white or fume)

€ 20.290,60

A + F Bianco/Nero/Crema lucido
Mosaik: Bianco+Argento+Argento rosato
Mosaik: Argento Foglia+Argento Foglia 2+Oro Foglia
(Gloss White/Black/Cream-Mosaik: White+Silver foil+pinkish silver)
(Gloss White/Black/Cream-Mosaik: Silver foil+Silver foil2+Gold foil)

B + C + D + E Bianco/Nero/Cream opaco - decorazioni Oro/Argento foglia
(opaque White/Black - Gold/Silver foil decorations)

H Argento/Oro foglia
(Silver/Gold foil)

L Vetri:Bianco/Fume
(glass white or fume)

€ 20.670,10

TV - LIFT & BAR - 158 - MOSAIK

Struttura per Home Cinema - a parete (con salita TV motorizzata computerizzata e telecomandata - completo di Mobile a 3 ante push)
Home Cinema - Wall Rack (with motorized, computerized and remote-controlled TV lift system - provided with a 3 push-doors cabinet)

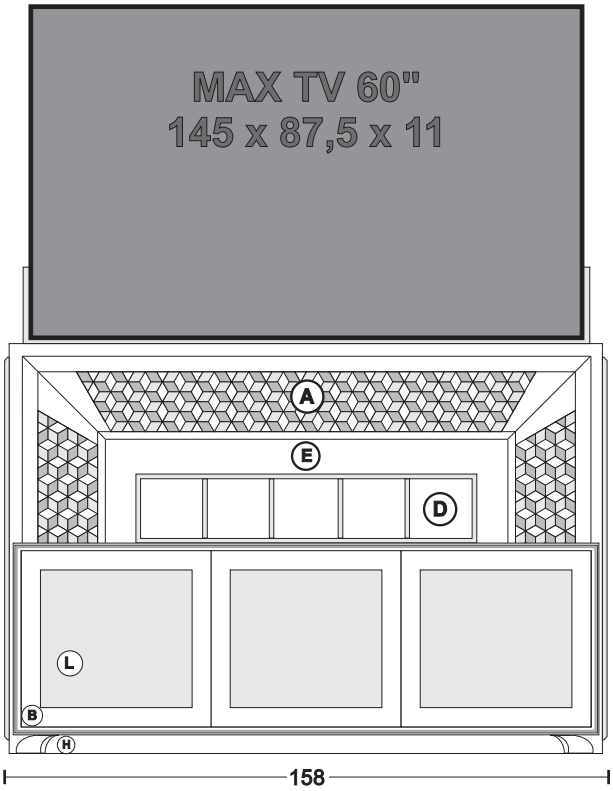

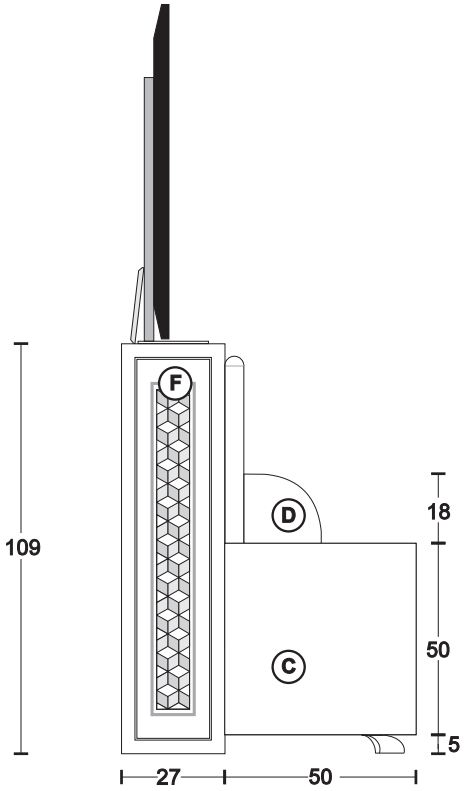

Finiture e combinazioni - Finishings and combinations

A + F Bianco/Nero/Crema opaco
Mosaik: Bianco+Argento+Argento rosato
Mosaik: Argento Foglia+Argento Foglia 2+Oro Foglia
(Opaque White/Black/Cream-Mosaik: White+Silver foil+pinkish silver)
(Opaque White/Black/Cream-Mosaik: Silver foil+Silver foil2+Gold foil)

B + C + D + E Bianco/Nero/Crema opaco - decorazioni Oro/Argento foglia
(opaque White/Black/Cream - Gold/Silver foil decorations)

H Argento/Oro foglia
(Silver/Gold foil)

L Vetri:Bianco/Fume
(glass white or fume)

€ 18.458,00

A + F Bianco/Nero/Crema lucido
Mosaik: Bianco+Argento+Argento rosato
Mosaik: Argento Foglia+Argento Foglia 2+Oro Foglia
(Gloss White/Black/Cream-Mosaik: White+Silver foil+pinkish silver)
(Gloss White/Black/Cream-Mosaik: Silver foil+Silver foil2+Gold foil)

B + C + D + E Bianco/Nero opaco/Crema - decorazioni Oro/Argento foglia
(opaque White/Black/Cream - Gold/Silver foil decorations)

H Argento/Oro foglia
(Silver/Gold foil)

L Vetri:Bianco/Fume
(glass white or fume)

€ 18.836,40

TV - LIFT & FIRE - 182 - MOSAIK

Struttura per Home Cinema - a parete (con salita TV motorizzata computerizzata e telecomandata - completo di Bio-Camino ecologico)
Home Cinema - Wall Rack (motorized, computerized and remote-controlled TV lift system - provided with ecological bio-fireplace)

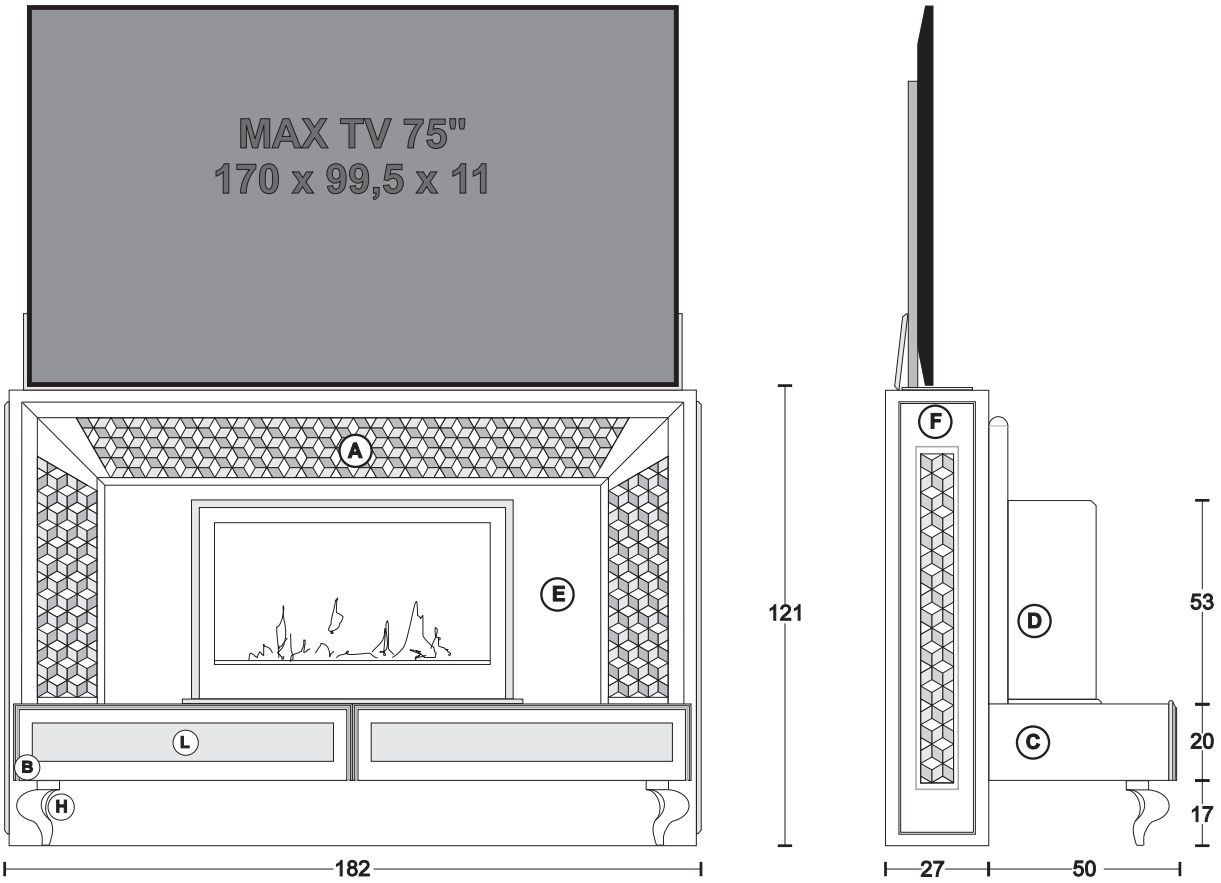

Finiture e combinazioni - Finishings and combinations

Ⓐ+Ⓕ Bianco/Nero/Crema opaco
Mosaik: Bianco+Argento+Argento rosato
Mosaik: Argento Foglia+Argento Foglia 2+Oro Foglia
(Opaque White/Black/Cream-Mosaik: White+Silver foil+pinkish silver)
(Opaque White/Black/Cream-Mosaik: Silver foil+Silver foil2+Gold foil)

Ⓑ+Ⓒ+Ⓓ+Ⓔ Bianco/Nero/Crema opaco - decorazioni Oro/Argento foglia
(opaque White/Black/Cream - Gold/Silver foil decorations)

Ⓗ Argento/Oro foglia
(Silver/Gold foil)

Ⓛ Vetri:Bianco/Fume
(glass white or fume)

€ 20.680,00

Ⓐ+Ⓕ Bianco/Nero/Crema lucido
Mosaik: Bianco+Argento+Argento rosato
Mosaik: Argento Foglia+Argento Foglia 2+Oro Foglia
(Gloss White/Black/Cream-Mosaik: White+Silver foil+pinkish silver)
(Gloss White/Black/Cream-Mosaik: Silver foil+Silver foil2+Gold foil)

Ⓑ+Ⓒ+Ⓓ+Ⓔ Bianco/Nero/Crema opaco - decorazioni Oro/Argento foglia
(opaque White/Black/Cream - Gold/Silver foil decorations)

Ⓗ Argento/Oro foglia
(Silver/Gold foil)

Ⓛ Vetri:Bianco/Fume
(glass white or fume)

€ 21.065,00

TV - LIFT & BAR - 182 - MOSAIK

Struttura per Home Cinema - a parete (con salita TV motorizzata computerizzata e telecomandata - completo di Mobile a 4 ante push)
Home Cinema - Wall Rack (with motorized, computerized and remote-controlled TV lift system - provided with a 4 push-doors cabinet)

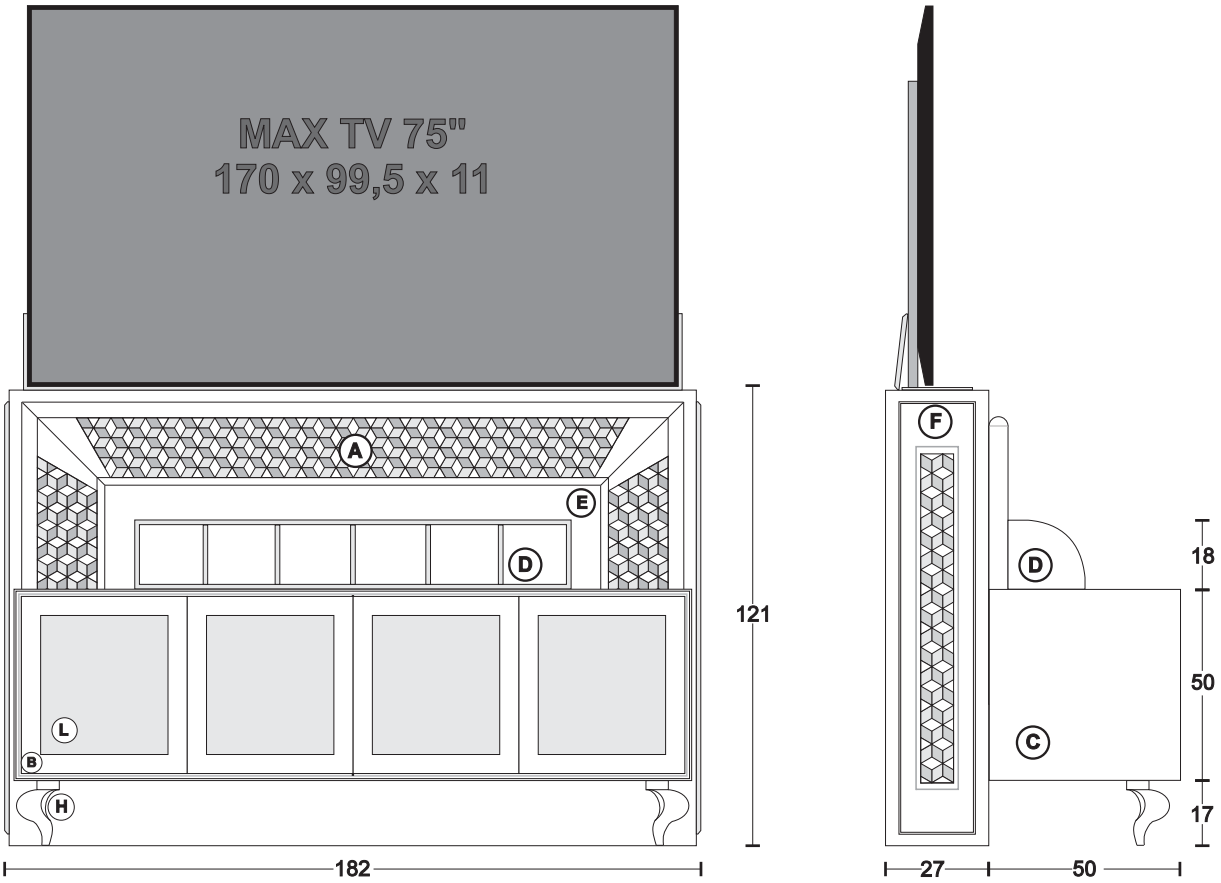

Finiture e combinazioni - Finishings and combinations

Ⓐ+Ⓕ Bianco/Nero/Crema opaco
Mosaik: Bianco+Argento+Argento rosato
Mosaik: Argento Foglia+Argento Foglia 2+Oro Foglia
(Opaque White/Black/Cream-Mosaik: White+Silver foil+pinkish silver)
(Opaque White/Black/Cream-Mosaik: Silver foil+Silver foil2+Gold foil)

Ⓑ+Ⓒ+Ⓓ+Ⓔ Bianco/Nero/Crema opaco - decorazioni Oro/Argento foglia
(opaque White/Black/Cream - Gold/Silver foil decorations)

Ⓗ Argento/Oro foglia
(Silver/Gold foil)

Ⓛ Vetri:Bianco/Fume
(glass white or fume)

€ 18.947,50

Ⓐ+Ⓕ Bianco/Nero/Crema lucido
Mosaik: Bianco+Argento+Argento rosato
Mosaik: Argento Foglia+Argento Foglia 2+Oro Foglia
(Gloss White/Black/Cream-Mosaik: White+Silver foil+pinkish silver)
(Gloss White/Black/Cream-Mosaik: Silver foil+Silver foil2+Gold foil)

Ⓑ+Ⓒ+Ⓓ+Ⓔ Bianco/Nero/Crema opaco - decorazioni Oro/Argento foglia
(opaque White/Black/Cream - Gold/Silver foil decorations)

Ⓗ Argento/Oro foglia
(Silver/Gold foil)

Ⓛ Vetri:Bianco/Fume
(glass white or fume)

€ 19.327,00

SLIDING HOME CINEMA - MOSAIK

Struttura per Home Cinema - a parete con apertura motorizzata, computerizzata e telecomandata - luci led laterali
Home Cinema - Wall Rack - Motorized and computerized opening, with remote control - LED lights on sides

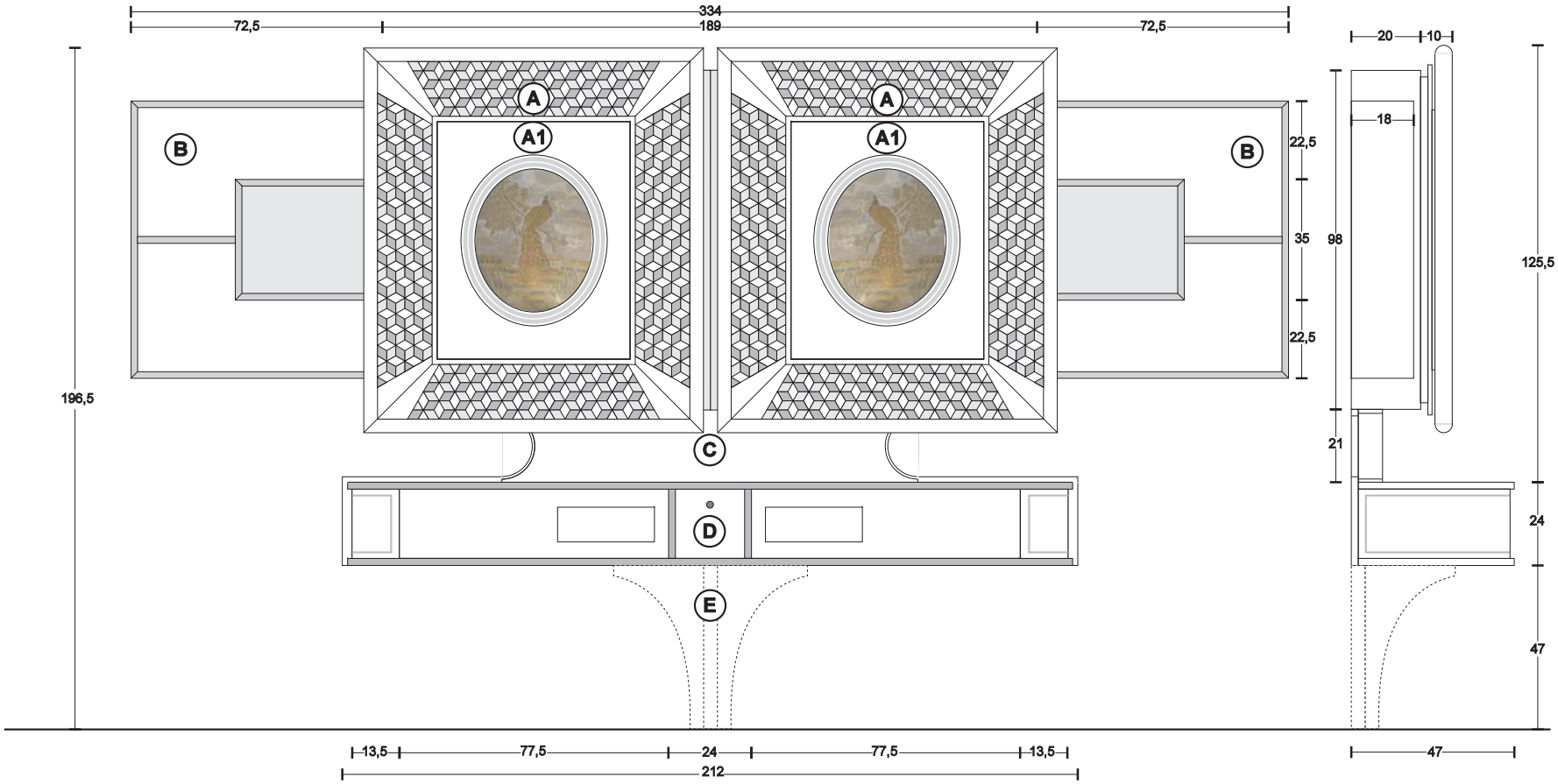

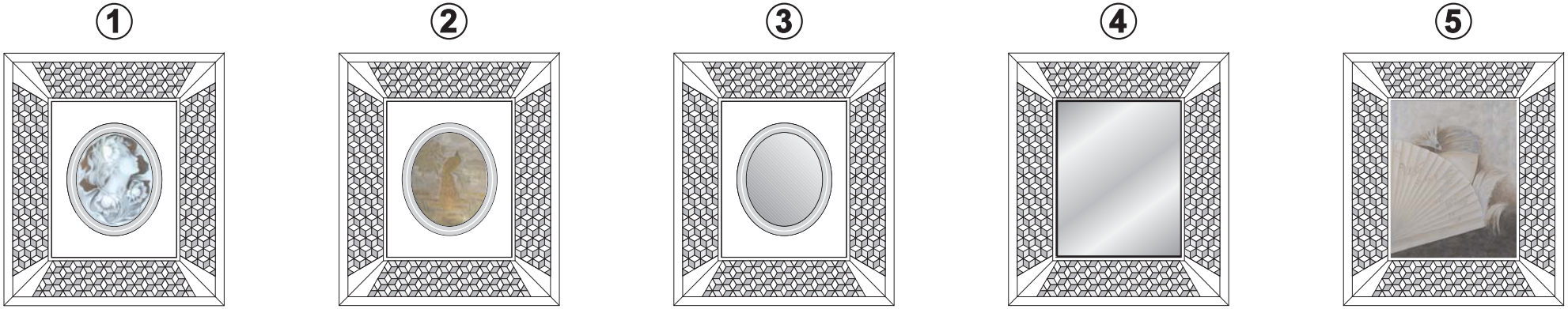

SLIDING HOME CINEMA - MOSAIK

Struttura per Home Cinema - a parete con apertura motorizzata, computerizzata e telecomandata - luci led laterali
Home Cinema - Wall Rack - Motorized and computerized opening, with remote control - LED lights on sides

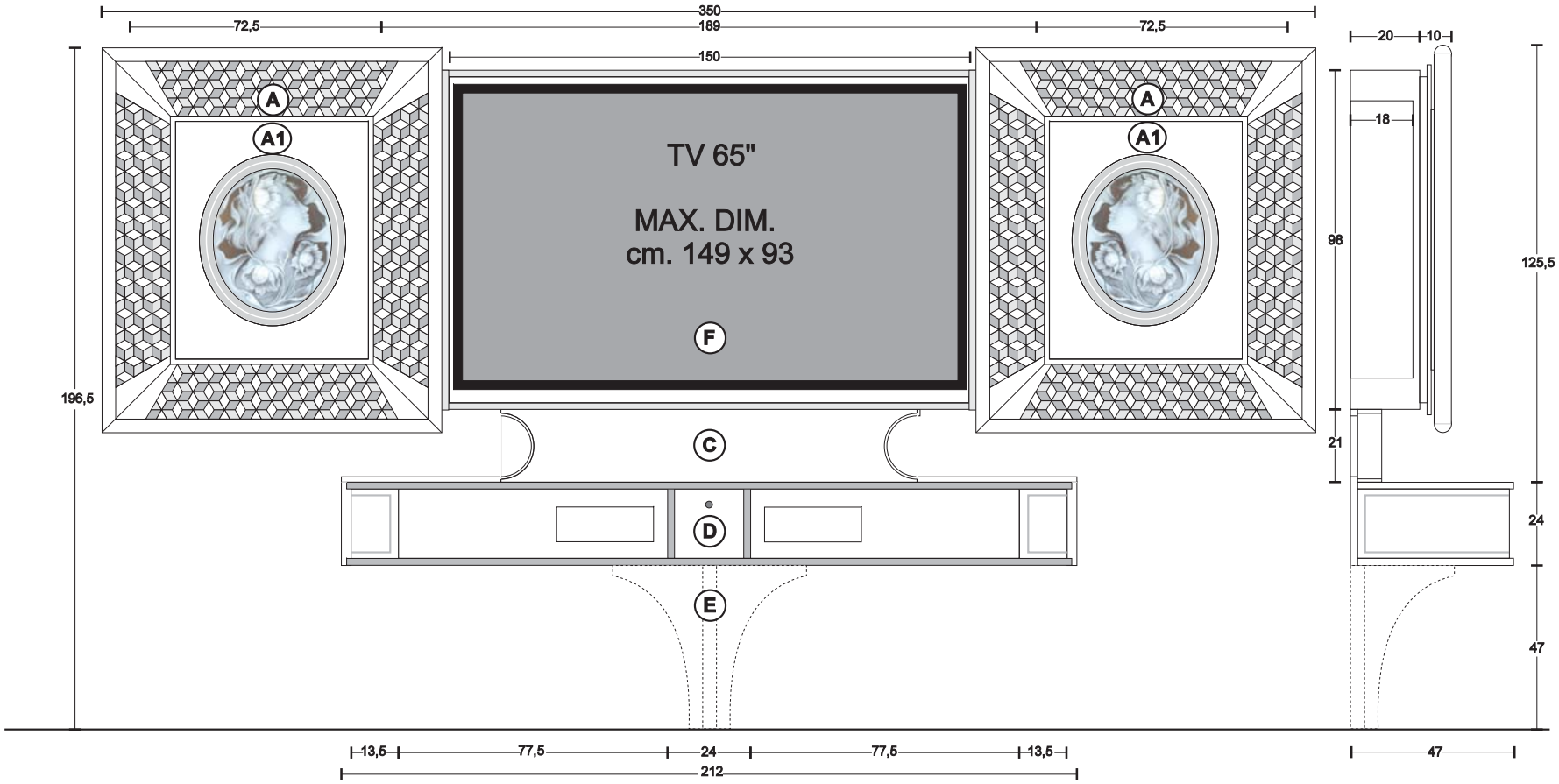

Ⓐ Bianco/Nero/Crema opaco
Mosaik:bianco+Argento+Argento rosato
Mosaik:Argento+Argento 2+Oro foglia
Opaque White/Black/Cream-Mosaik:White+Silver foil+pinkish
Opaque White/Black/Cream-Mosaik:Silver+Silver 2+Gold foil

Ⓐ1 + Ⓒ + Ⓔ + Ⓕ Bianco/Nero/Crema opaco
Opaque White/Black/Cream

Ⓑ Bianco/Nero/Crema opaco
Decorazioni - Argento/Oro Foglia
Opaque White/Black/Cream
Decoration - Gold/Silver foil

Ⓓ Top Argento/Oro Foglia-parti rimanenti
Bianco/Nero/Crema opaco -Decorazioni Oro/Argento Foglia
Top silver/Gold foil-remaining parts:
Opaque White/Black/Cream-decorations Gold/silver foil

Con-with ① **EURO 28.917,90** Con-with ② **EURO 32.220,10** Con-with ③ **EURO 28.260,10** Con-with ④ **EURO 28.285,40** Con-with ⑤ **EURO 29.145,60**

Ⓐ Bianco/Nero/Crema lucido
Mosaik:bianco+Argento+Argento rosato
Mosaik:Argento+Argento 2+Oro foglia
Gloss White/Black/Cream-Mosaik:White+Silver foil+pinkish
Gloss White/Black/Cream-Mosaik:Silver+Silver 2+Gold foil

Ⓐ1 + Ⓒ + Ⓔ + Ⓕ Bianco/Nero/Crema opaco
Opaque White/Black/Cream

Ⓑ Bianco/Nero/Crema opaco
Decorazioni - Argento/Oro Foglia
Opaque White/Black/Cream
Decoration - Gold/Silver foil

Ⓓ Top Argento/Oro Foglia-parti rimanenti
Bianco/Nero/Crema opaco -Decorazioni Oro/Argento Foglia
Top silver/Gold foil-remaining parts:
Opaque White/Black/Cream-decorations Gold/silver foil

Con-with ① **EURO 29.394,20** Con-with ② **EURO 32.738,20** Con-with ③ **EURO 28.791,40** Con-with ④ **EURO 28.803,50** Con-with ⑤ **EURO 29.676,90**

REVOLVING HOME CINEMA - MOSAIK

Struttura per Home Cinema - centro stanza con rotazione TV motorizzata, computerizzata e telecomandata
Home Cinema - Standing rack - Motorized and computerized revolving TV , with remote control

LATO -SIDE- "A"

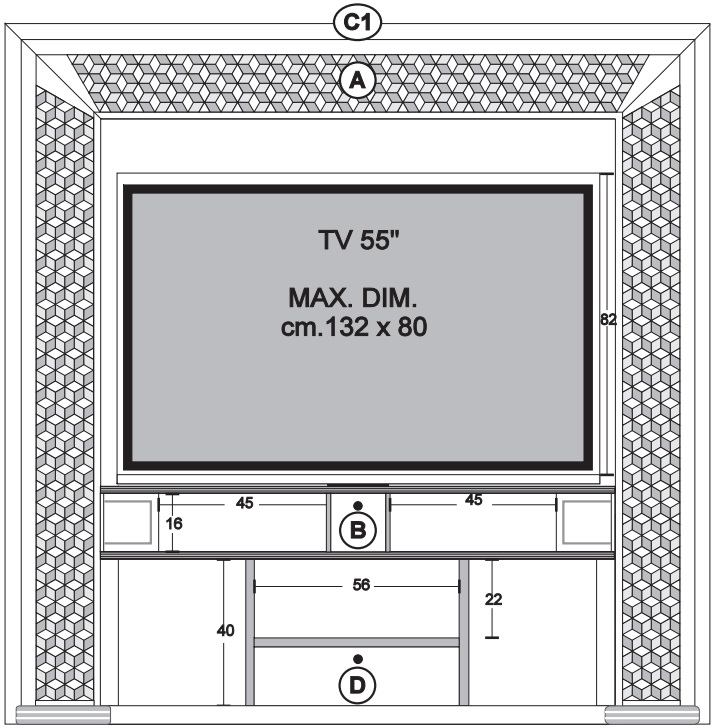

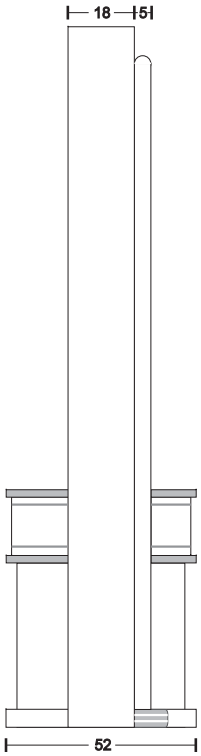

LATO -SIDE- "B"

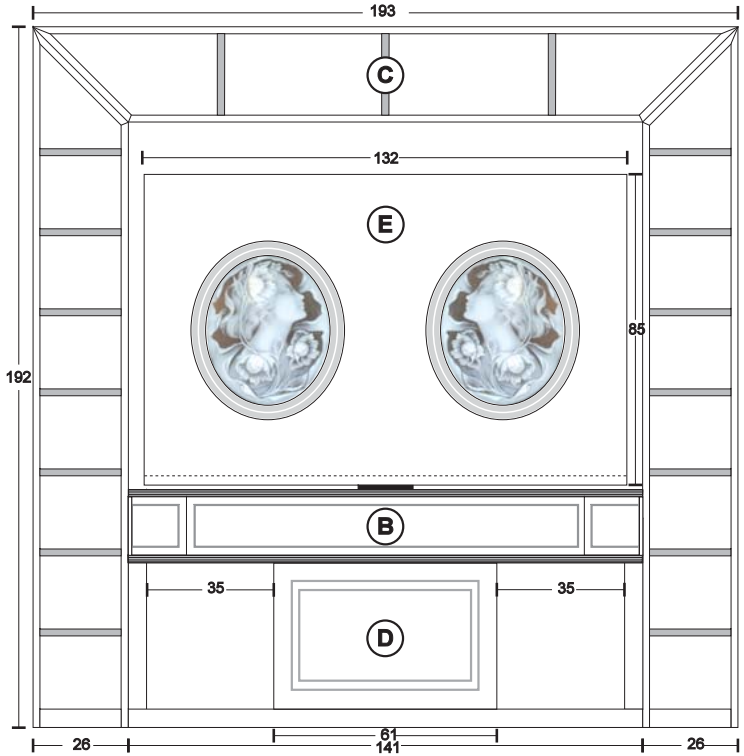

REVOLVING HOME CINEMA - MOSAIK

Struttura per Home Cinema - centro stanza con rotazione TV motorizzata, computerizzata e telecomandata
Home Cinema - Standing rack - Motorized and computerized revolving TV , with remote control

DECORAZIONE PANNELLO LATO "B" -DECORATION PANEL SIDE "B"

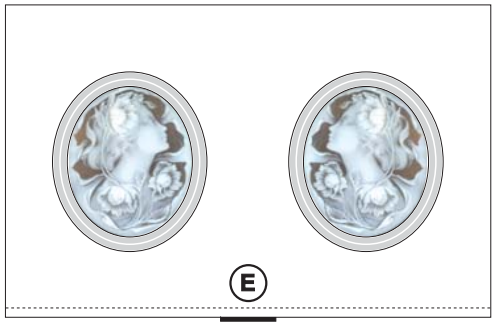

1 ovale con Cammeo
Oval with Cameo

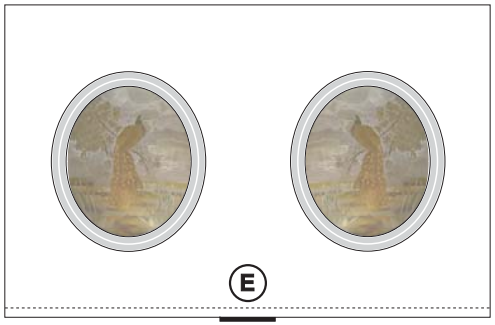

2 Ovale con Pavone Artistico oro 23/22/20/18/16/12 Carati
Oval with Artistic peacock Gold 23/22/20/18/16/12 carats

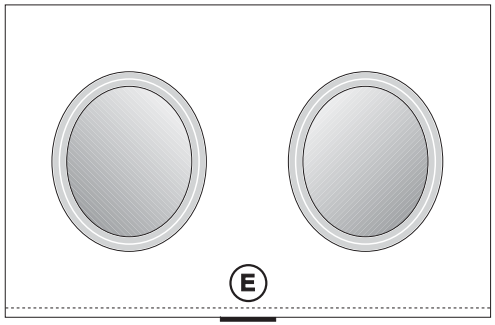

3 Ovale con specchio bisellato
Oval with bevelled mirror

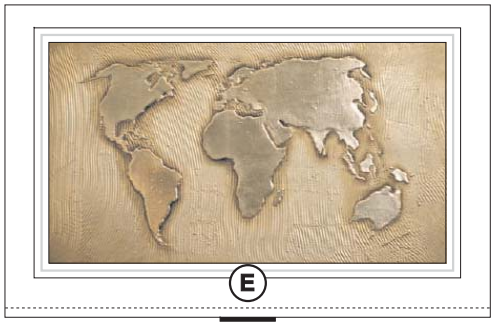

4 "Il Mondo" decorazione in rilievo in foglia platino
"The world" decoration in relief - platinum foil

A cornice-frame:
Bianco/Nero/Crema opaco
White/Black/Cream opaque

C1+C+E+D Bianco/Nero/Crema opaco-Decorazioni Oro/Argento Foglia
White/Black/Cream opaque-decoration Gold/Silver Foil

B Oro/Argento Foglia-Bianco/Nero/Crema opaco
Gold/Silver foil-White/Black/Cream opaque

Mosaik:Bianco+Argento+Argento rosato
Mosaik:White+Silverfoil+Pinkish silverfoil

Mosaik: Argento+Argento 2+oro
Mosaik:Silverfoil+Silverfoil 2+Gold

Con-with 1 EURO 19.631,70 | Con-with 2 EURO 23.244,10 | Con-with 3 EURO 19.206,00 | Con-with 4 EURO 20.746,00

A cornice-frame-Rahmen:
Nero/Bianco/Crema lucido
Gloss Black/White/Cream

C1+C+E+D Nero/Bianco/Crema lucido-Decorazioni Oro/Argento Foglia
Gloss Black/White/Cream-decoration Gold/Silver Foil

B Oro/Argento Foglia-Bianco/Nero/Crema opaco
Gold/Silver foil-White/Black/Cream opaque

Mosaik:Bianco+Argento+Argento rosato
Mosaik:White+Silverfoil+Pinkish silverfoil

Mosaik:Argento+Argento 2+oro
Mosaik:Silverfoil+Silverfoil 2+Gold

Con-with 1 EURO 20.029,90 | Con-with 2 EURO 23.643,40 | Con-with 3 EURO 19.605,30 | Con-with 4 EURO 21.145,30

THE WALL HOME CINEMA - MOSAIK

Struttura per Home Cinema - a parete
Home Cinema - Wall Rack

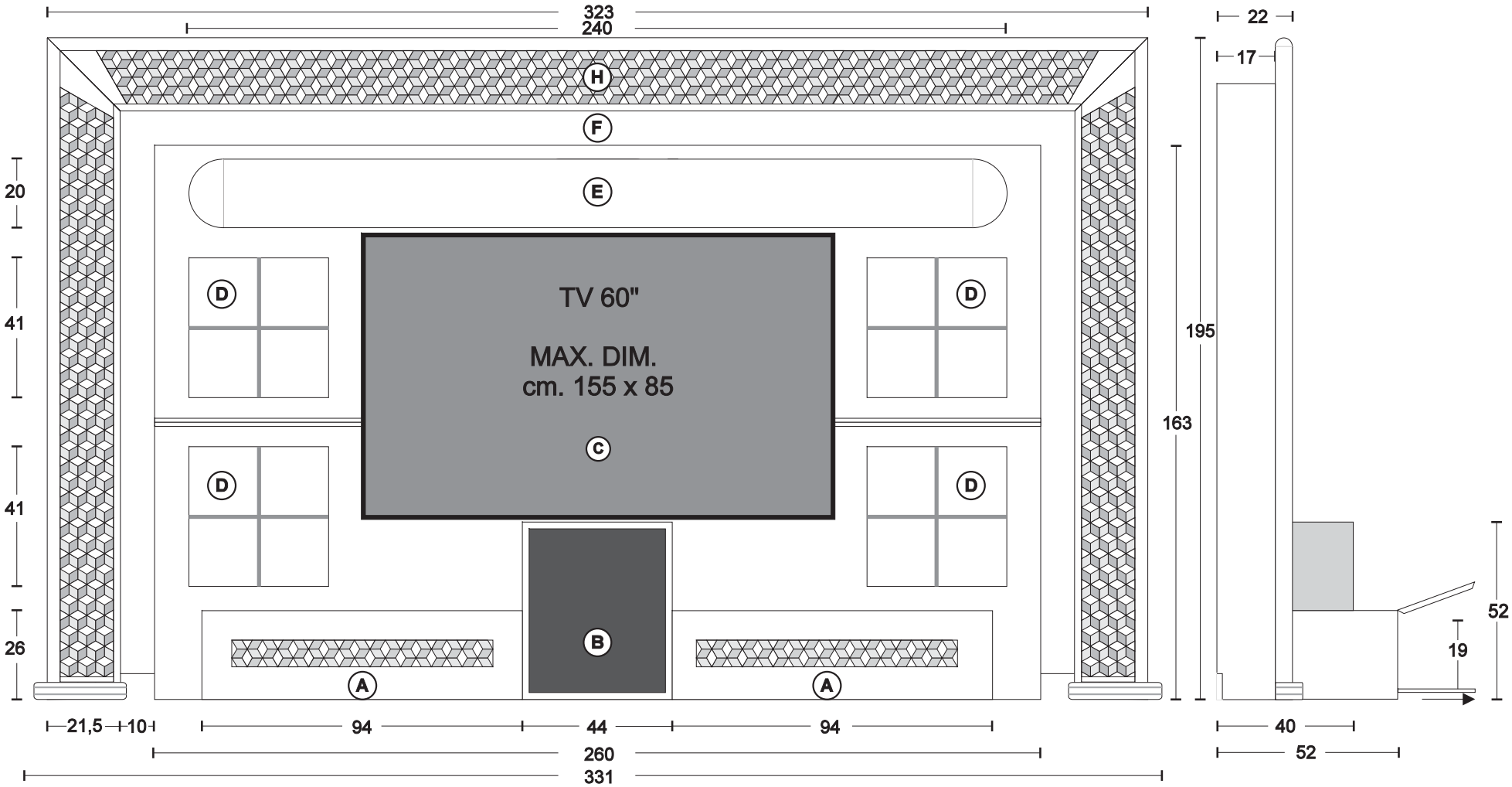

B+C+A+D+E+F	Bianco/Nero/Crema Opaco Opaque White/Black/Cream	H Cornice:Bianco/Nero/Crema opaco - Frame:White/Black/Cream opaque Mosaik: Bianco+Argento+Argento rosato - White+Silverfoil+Pinkish silverfoil Mosaik: Argento+Argento 2+oro - Silverfoil+Silverfoil 2+Gold	**€ 21.037,50**
B+C+A+D+E+F	Bianco/Nero/Crema Opaco Opaque White/Black/Cream	H cornice:Nero/Bianco/Crema lucido - frame:Gloss Black/White/Cream Mosaik: Bianco+Argento+Argento rosato - White+Silverfoil+Pinkish silverfoil Mosaik: Argento+Argento 2+oro - Silverfoil+Silverfoil 2+Gold	**€ 21.694,20**

THE FRAME HOME CINEMA - MOSAIK

Struttura per Home Cinema - a parete (con luci retro-pannello diffuse)
Home Cinema - Wall Rack (with spreading back-panel lighting)

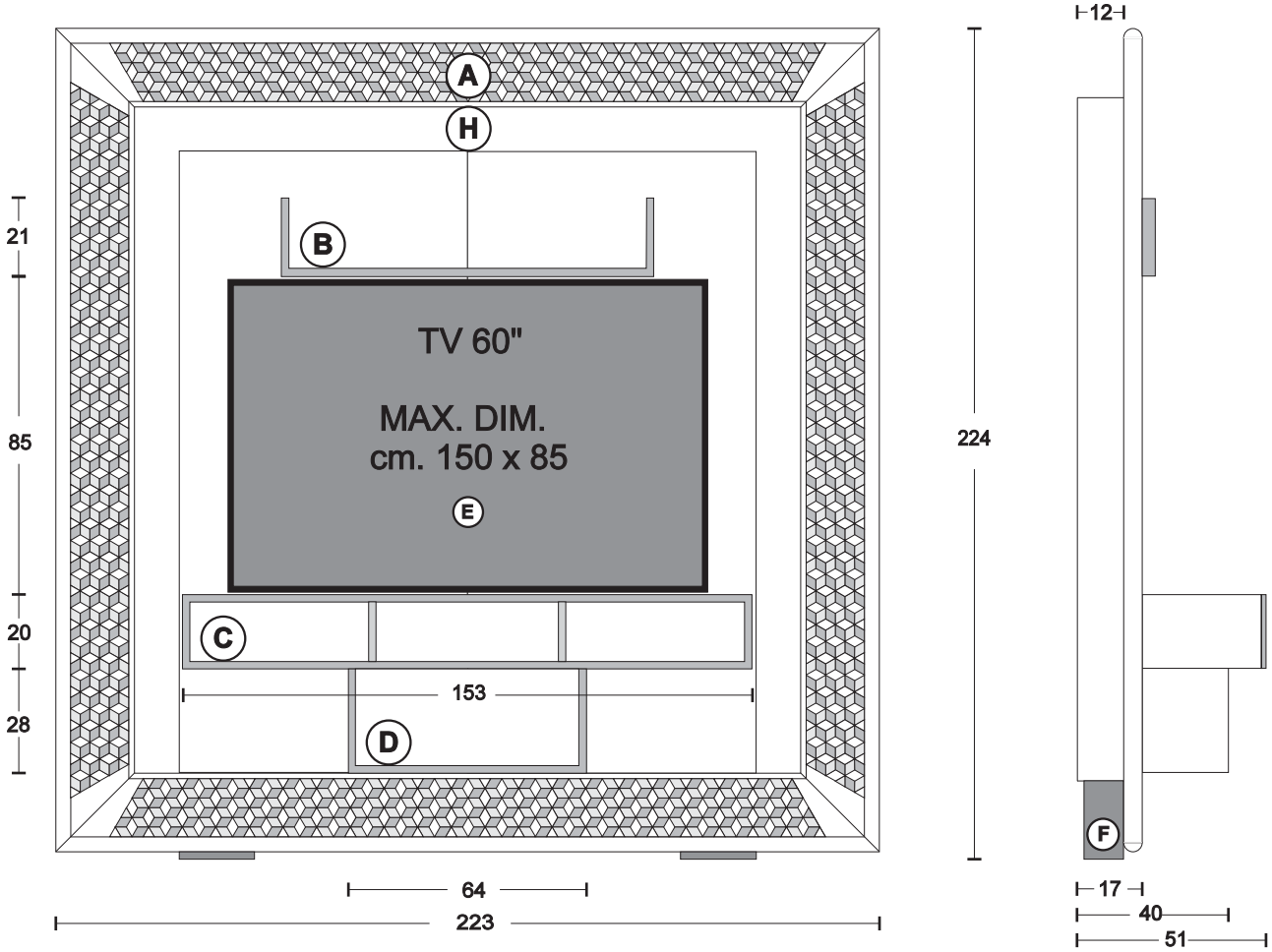

Finiture e combinazioni - Finishings and combinations

A	cornice-frame: Bianco/Nero/Crema opaco White/Black/Cream opaque Mosaik:Bianco+Argento+Argento rosato Mosaik:White+Silverfoil+Pinkish silverfoil Mosaik: Argento+Argento 2+oro Mosaik:Silverfoil+Silverfoil 2+Gold	C	Oro/Argento foglia Gold/Silver Foil	B + D + E + F + H	Bianco/Nero/Crema Opaco Opaque White/Black/Cream	€ 13.257,20
A	cornice-frame: Nero/Bianco/Crema lucido Gloss Black/White/Cream Mosaik:Bianco+Argento+Argento rosato Mosaik:White+Silverfoil+Pinkish silverfoil Mosaik:Argento+Argento 2+oro Mosaik:Silverfoil+Silverfoil 2+Gold	C	Oro/Argento foglia Gold/Silver Foil	B + D + E + F + H	Bianco/Nero/Crema Opaco Opaque White/Black/Cream	€ 13.921,60

THE FRAME CONTAINER-BAR - MOSAIK

Mobile con scaffali a giorno e ante scorrevoli - a parete (con led bianchi sotto piani orizzontali) ①②③④
Open wall-container, with sliding doors- Horizontal shelves enlightened by white LEDs ①②③④

-Sezione
-Section

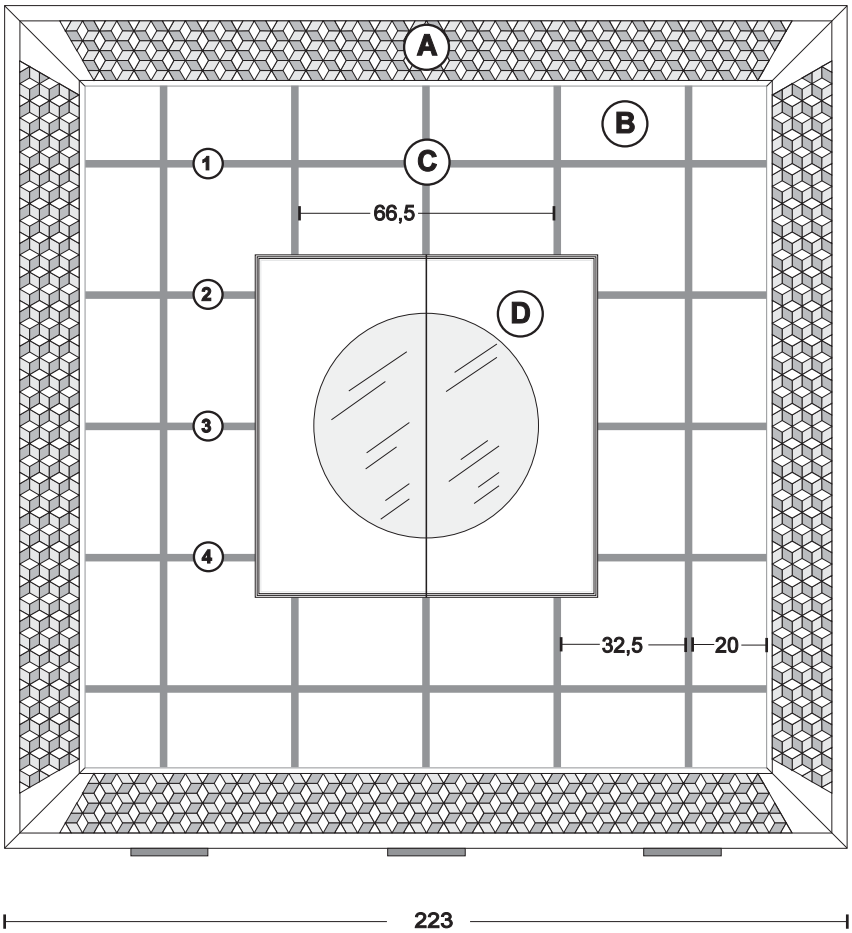

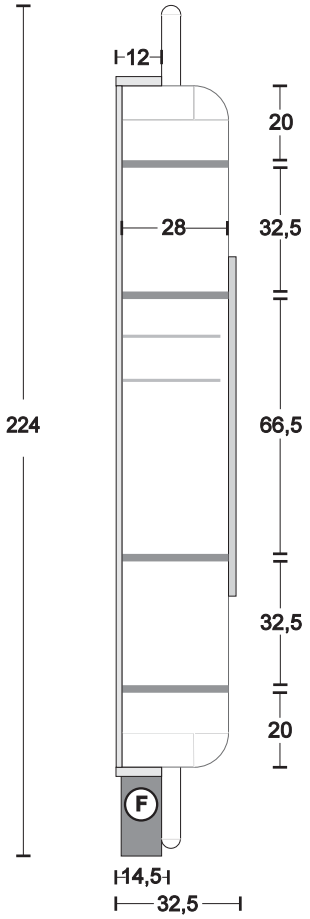

Finiture e combinazioni - Finishings and combinations

Ⓐ cornice-frame:
Bianco/Nero/Crema opaco
White/Black/Cream opaque

Mosaik:Bianco+Argento+Argento rosato
Mosaik:White+Silverfoil+Pinkish silverfoil

Mosaik: Argento+Argento 2+oro
Mosaik:Silverfoil+Silverfoil 2+Gold

Ⓒ + Ⓕ + Ⓓ Bianco/Nero/Crema Opaco
Opaque White/Black/Cream

Ⓑ Argento/Oro foglia
Silver/Gold Foil

€ 16.762,90

Ⓐ cornice-frame:
Nero/Bianco/Crema lucido
Gloss Black/White/Cream

Mosaik:Bianco+Argento+Argento rosato
Mosaik:White+Silverfoil+Pinkish silverfoil

Mosaik:Argento+Argento 2+oro
Mosaik:Silverfoil+Silverfoil 2+Gold

Ⓒ + Ⓕ + Ⓓ Bianco/Nero/Crema Opaco
Opaque White/Black/Cream

Ⓑ Argento/Oro foglia
Silver/Gold Foil

€ 17.426,20

THE FRAME "BIG MIRROR" - MOSAIK

Specchio a parete completo di consolle a 2 cassetti e vano a giorno - led bianchi perimetrali - bolle perimetrali su specchio
Wall-mirror with 2-drawer-consolle and open compartment- white leds on perimeter- bubbles on mirror border

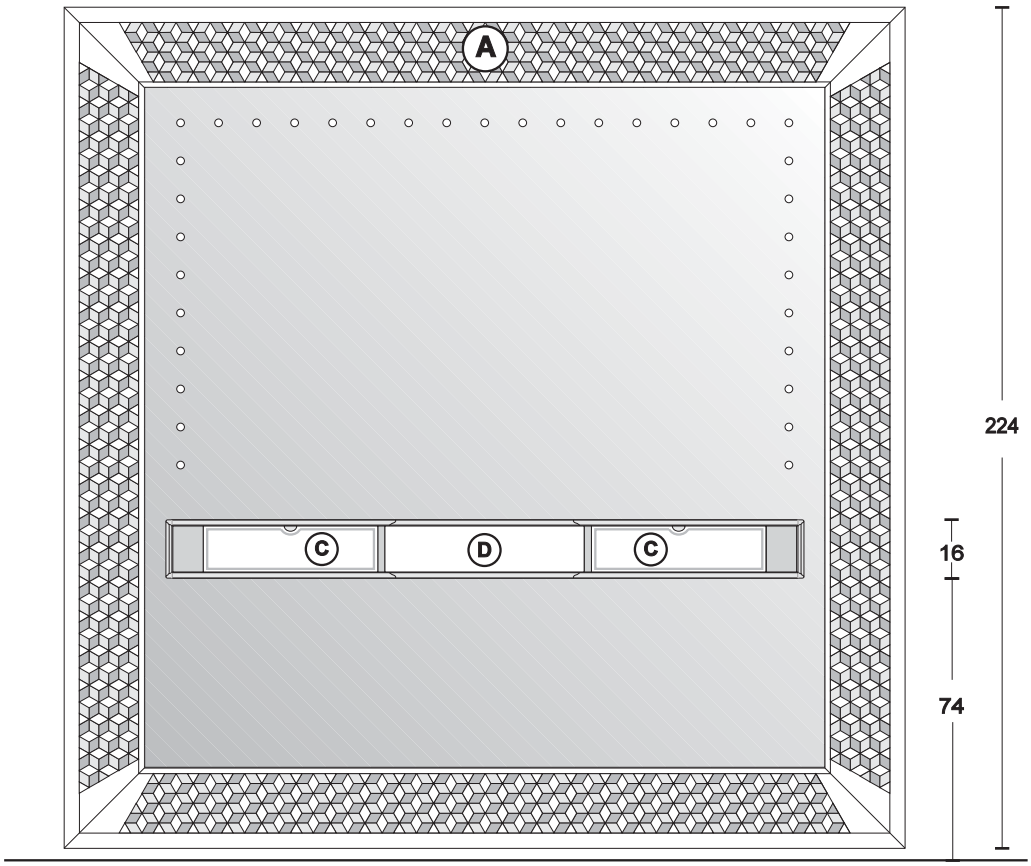

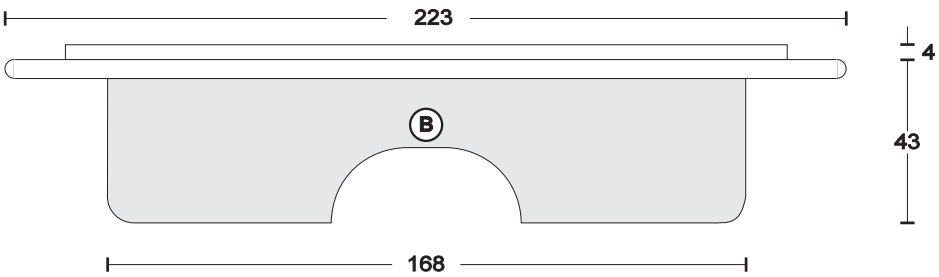

Finiture e combinazioni - Finishings and combinations

(A) cornice-frame: Bianco/Nero/Crema opaco White/Black/Cream opaque Mosaik:Bianco+Argento+Argento rosato Mosaik:White+Silverfoil+Pinkish silverfoil Mosaik: Argento+Argento 2+oro Mosaik:Silverfoil+Silverfoil 2+Gold	(C) + (D) Bianco/Nero/Crema Opaco Opaque White/Black/Cream	(B) Argento/Oro foglia Silver/Gold Foil	**€ 14.516,70**
(A) cornice-frame: Nero/Bianco/Crema lucido Gloss Black/White/Cream Mosaik:Bianco+Argento+Argento rosato Mosaik:White+Silverfoil+Pinkish silverfoil Mosaik:Argento+Argento 2+oro Mosaik:Silverfoil+Silverfoil 2+Gold	(C) + (D) Bianco/Nero/Crema Opaco Opaque White/Black/Cream	(B) Argento/Oro foglia Silver/Gold Foil	**€ 15.182,20**

FRAME - 214 MOSAIK- MIRROR

SPECCHIERA A PARETE-WALL MIRROR

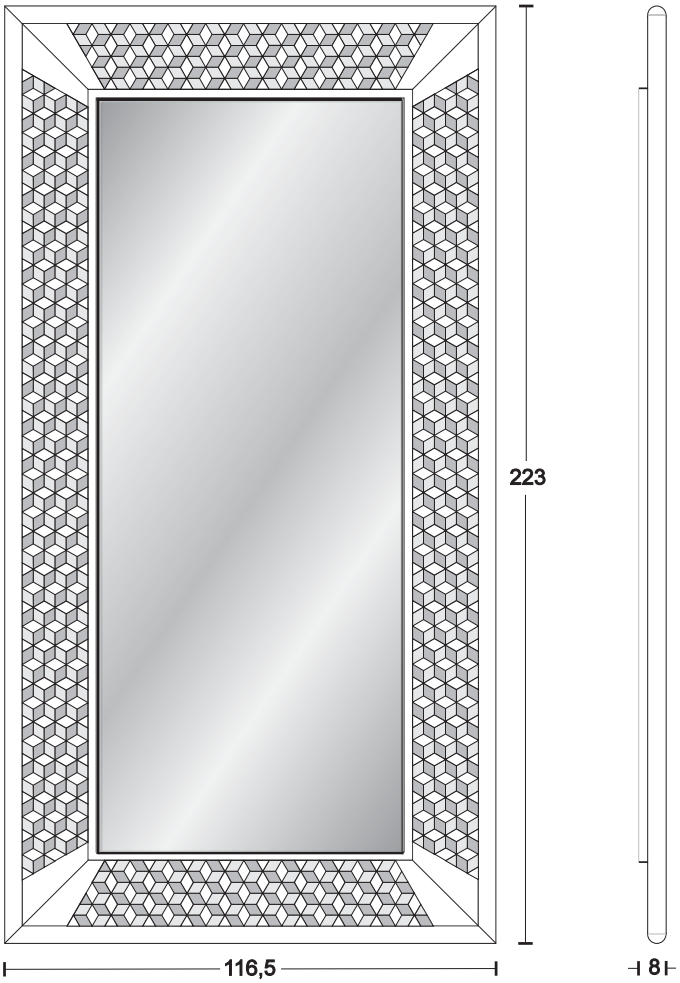

cornice-frame: **€ 6.800,20**
Bianco/Nero/Crema opaco
White/Black/Cream opaque

Mosaik:Bianco+Argento+Argento rosato
Mosaik:White+Silverfoil+Pinkish silverfoil

Mosaik: Argento+Argento 2+oro
Mosaik:Silverfoil+Silverfoil 2+Gold

cornice-frame: **€ 7.266,60**
Nero/Bianco/Crema lucido
Gloss Black/White/Cream

Mosaik:Bianco+Argento+Argento rosato
Mosaik:White+Silverfoil+Pinkish silverfoil

Mosaik:Argento+Argento 2+oro
Mosaik:Silverfoil+Silverfoil 2+Gold

FRAME - 214 MOSAIK - SOLO FRAME

SOLO CORNICE-JUST FRAME

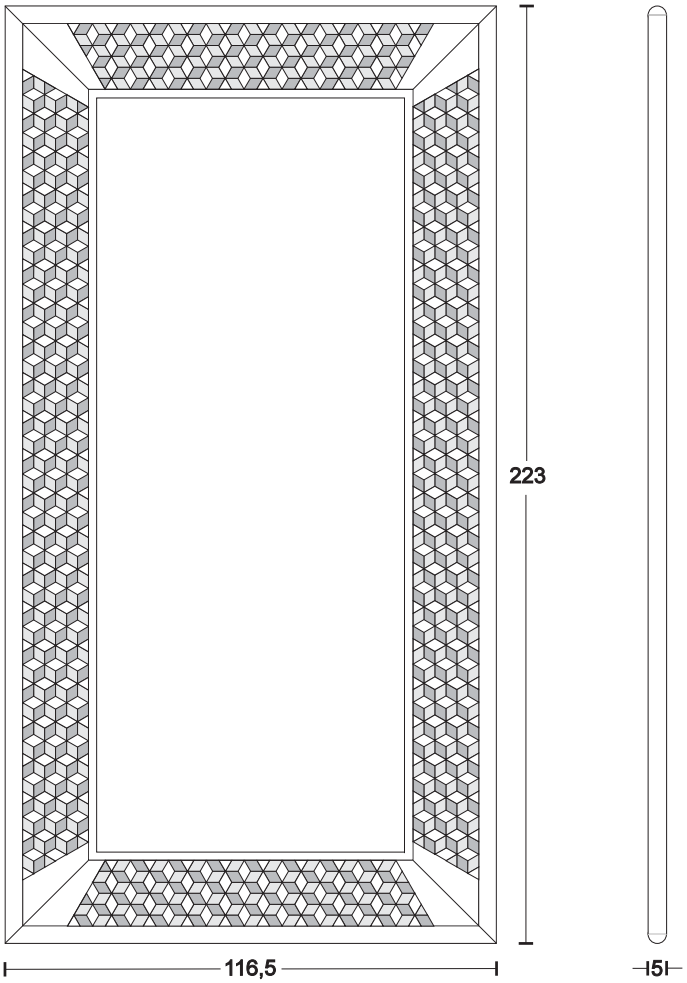

cornice-frame: **€ 6.110,50**
Bianco/Nero/Crema opaco
White/Black/Cream opaque

Mosaik:Bianco+Argento+Argento rosato
Mosaik:White+Silverfoil+Pinkish silverfoil

Mosaik: Argento+Argento 2+oro
Mosaik:Silverfoil+Silverfoil 2+Gold

cornice-frame: **€ 6.575,80**
Nero/Bianco/Crema lucido
Gloss Black/White/Cream

Mosaik:Bianco+Argento+Argento rosato
Mosaik:White+Silverfoil+Pinkish silverfoil

Mosaik:Argento+Argento 2+oro
Mosaik:Silverfoil+Silverfoil 2+Gold

FRAME - 120 MOSAIK

Elemento porta CD-DVD a parete
Wall CD-DVD rack

cornice-frame: **€ 5.028,10**
Bianco/Nero/Crema opaco-White/Black/Creme opaque
Mosaik:Bianco+Argento+Argento rosato - White+Silverfoil+Pinkish silverfoil
Mosaik:Argento+Argento 2+oro - Silverfoil+Silverfoil 2+Goldfoil

cornice-frame: **€ 5.379,00**
nero/bianco/crema lucido-gloss black/white/cream
Mosaik:Argento+Argento 2+oro - Silverfoil+Silverfoil 2+Goldfoil
Mosaik:Bianco+Argento+Argento rosato - White+Silverfoil+Pinkish silverfoil

(interno-inside: Metalblack/Bianco-White/Nero-Black)

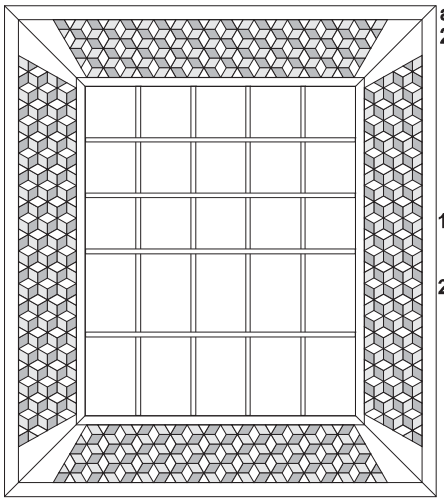

art.: F12-3C3V
234 CD + 90 DVD

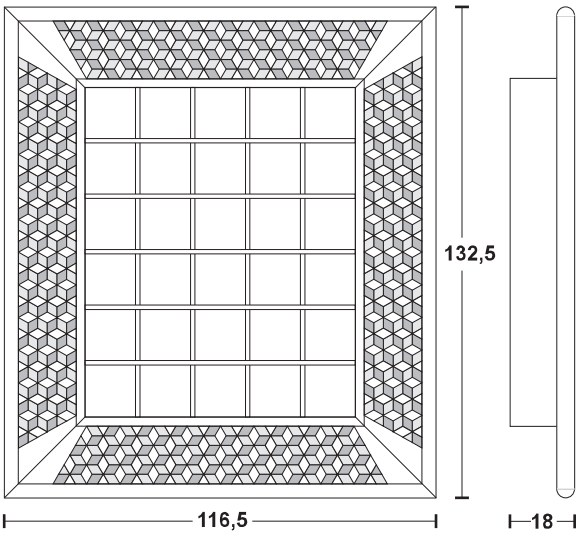

art.: F12-6C
390 CD

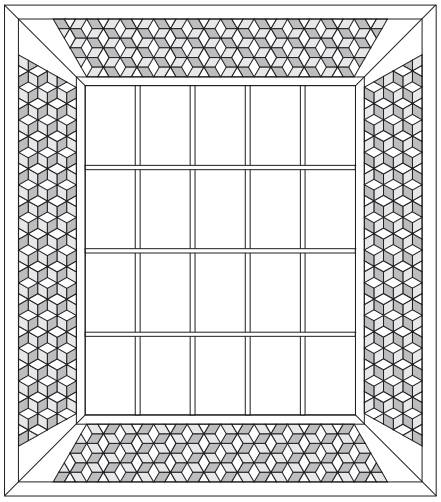

art.:.F12-4V
180 DVD

FRAME 120 MOSAIK-MIRROR

Specchiera a parete - Wall Mirror

cornice-frame: **€ 4.994,00**
Bianco/Nero/Crema opaco-White/Black/Creme opaque
Mosaik:Bianco+Argento+Argento rosato - White+Silverfoil+Pinkish silverfoil
Mosaik:Argento+Argento 2+oro - Silverfoil+Silverfoil 2+Goldfoil

cornice-frame: **€ 5.233,80**
nero/bianco/crema lucido-gloss black/white/cream
Mosaik:Argento+Argento 2+oro - Silverfoil+Silverfoil 2+Goldfoil
Mosaik:Bianco+Argento+Argento rosato - White+Silverfoil+Pinkish silverfoil

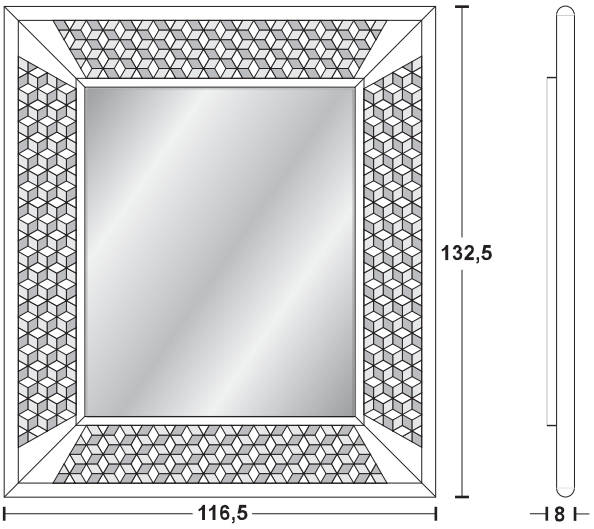

FRAME 120 MOSAIK - SOLO FRAME

Solo cornice - Just Frame

cornice-frame: **€ 4.768,50**
Bianco/Nero/Crema opaco-White/Black/Creme opaque
Mosaik:Bianco+Argento+Argento rosato - White+Silverfoil+Pinkish silverfoil
Mosaik:Argento+Argento 2+oro - Silverfoil+Silverfoil 2+Goldfoil

cornice-frame: **€ 5.008,30**
nero/bianco/crema lucido-gloss black/white/cream
Mosaik:Argento+Argento 2+oro - Silverfoil+Silverfoil 2+Goldfoil
Mosaik:Bianco+Argento+Argento rosato - White+Silverfoil+Pinkish silverfoil

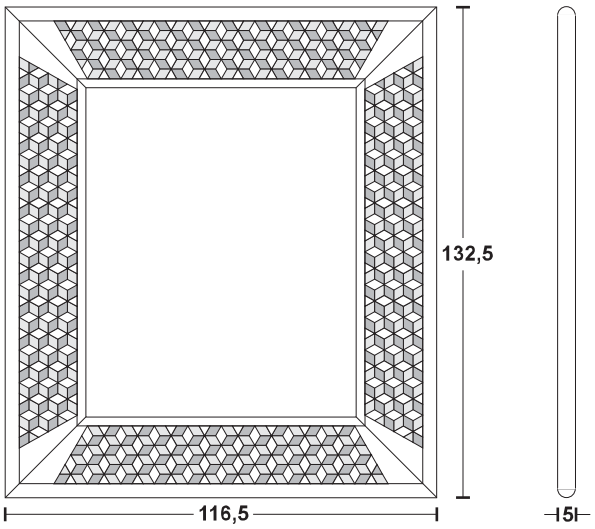

FRAME - 214 MOSAIK

Elemento porta CD-DVD a parete
Wall CD-DVD rack

cornice-frame: **€ 7.663,70**
Bianco/Nero/Crema opaco
White/Black/Cream opaque

Mosaik:Bianco+Argento+Argento rosato
Mosaik:White+Silverfoil+Pinkish silverfoil

Mosaik: Argento+Argento 2+oro
Mosaik:Silverfoil+Silverfoil 2+Gold

cornice-frame: **€ 8.129,00**
Nero/Bianco/Crema lucido
Gloss Black/White/Cream

Mosaik:Bianco+Argento+Argento rosato
Mosaik:White+Silverfoil+Pinkish silverfoil

Mosaik:Argento+Argento 2+oro
Mosaik:Silverfoil+Silverfoil 2+Gold

Interno: Bianco/Nero/Crema
Inside: White-Black-Cream

art. F214-12C
780 CD

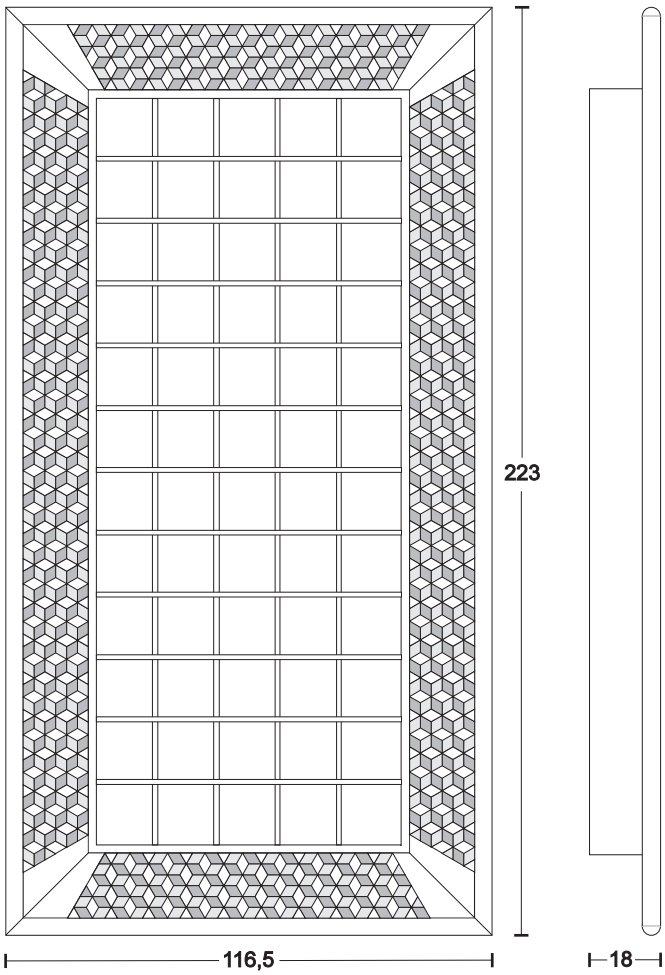

art. F214-9C2V
585 CD+90 DVD

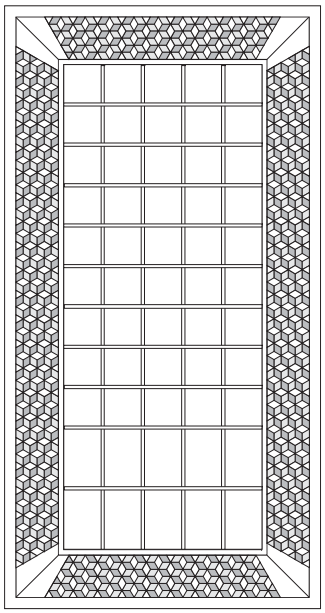

art. F214-6C4V
390 CD+180 DVD

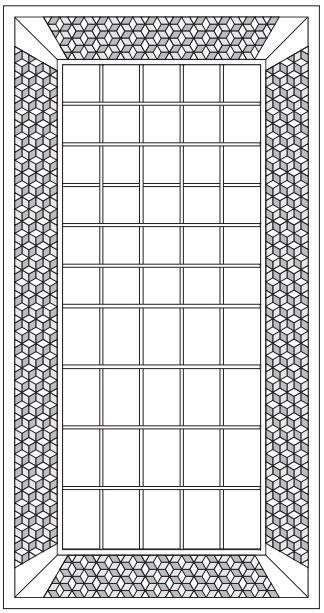

art. F214-3C6V
234 CD+270 DVD

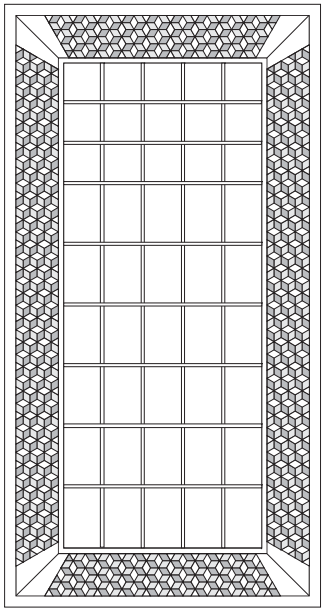

art. F214-8V
360 DVD

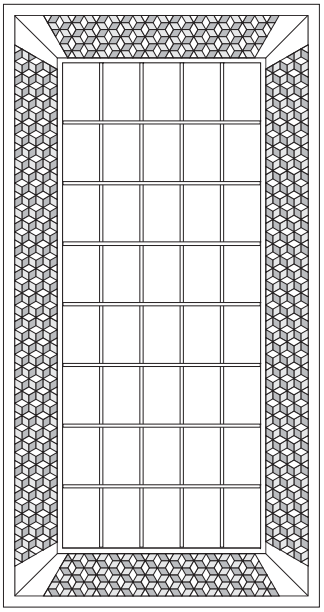

BODY LIGHT - MOSAIK

Corpo illuminante a parete
Wall Body-light

Completo di interruttore e spina elettrica (220 V.)
provided with switch and plug (220 volts)

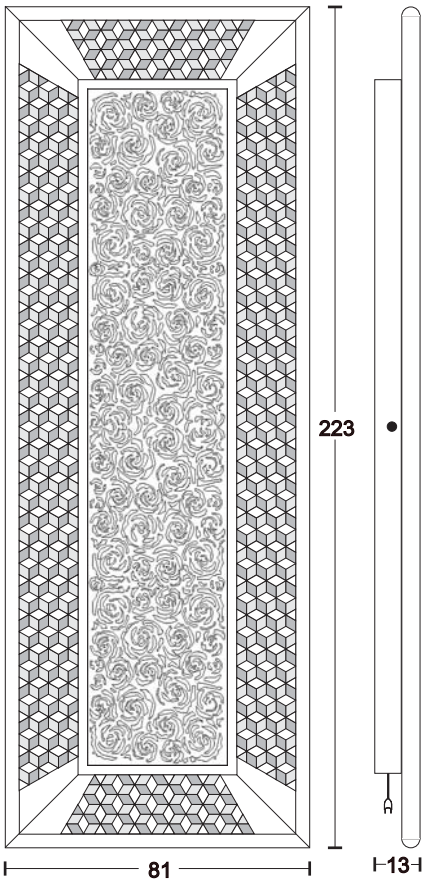

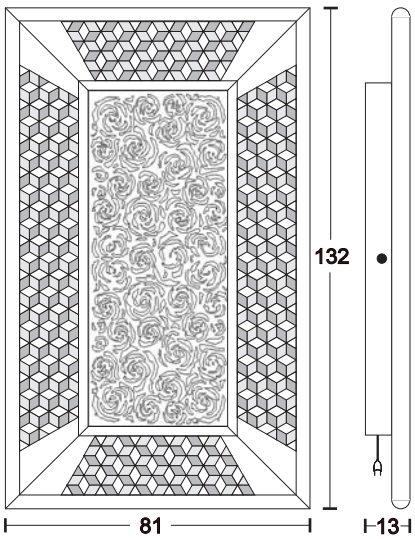

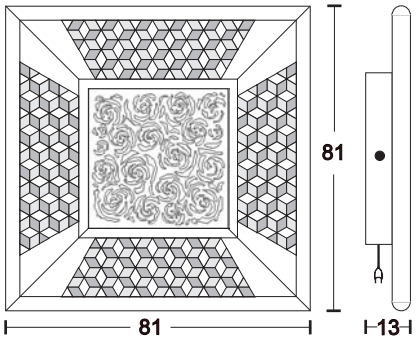

BODY LIGHT 214-MOSAIK

cornice-frame: **€ 9.006,80**
Bianco/Nero/Crema opaco
White/Black/Cream opaque

Mosaik:Bianco+Argento+Argento rosato
Mosaik:White+Silverfoil+Pinkish silverfoil

Mosaik: Argento+Argento 2+oro
Mosaik:Silverfoil+Silverfoil 2+Gold

cornice-frame: **€ 9.377,50**
Nero/Bianco/Crema lucido
Gloss Black/White/Cream

Mosaik:Bianco+Argento+Argento rosato
Mosaik:White+Silverfoil+Pinkish silverfoil

Mosaik:Argento+Argento 2+oro
Mosaik:Silverfoil+Silverfoil 2+Gold

Pannello frontale traforato Bianco/Nero/Crema
Frontal board in White-Black-Cream

BODY LIGHT 120-MOSAIK

cornice-frame: **€ 6.547,20**
Bianco/Nero/Crema opaco
White/Black/Cream opaque

Mosaik:Bianco+Argento+Argento rosato
Mosaik:White+Silverfoil+Pinkish silverfoil

Mosaik: Argento+Argento 2+oro
Mosaik:Silverfoil+Silverfoil 2+Gold

cornice-frame: **€ 6.800,20**
Nero/Bianco/Crema lucido
Gloss Black/White/Cream

Mosaik:Bianco+Argento+Argento rosato
Mosaik:White+Silverfoil+Pinkish silverfoil

Mosaik:Argento+Argento 2+oro
Mosaik:Silverfoil+Silverfoil 2+Gold

Pannello frontale traforato Bianco/Nero/Crema
Frontal board in White-Black-Cream

BODY LIGHT 80-MOSAIK

cornice-frame: **€ 3.824,70**
Bianco/Nero/Crema opaco
White/Black/Cream opaque

Mosaik:Bianco+Argento+Argento rosato
Mosaik:White+Silverfoil+Pinkish silverfoil

Mosaik: Argento+Argento 2+oro
Mosaik:Silverfoil+Silverfoil 2+Gold

cornice-frame: **€ 3.957,80**
Nero/Bianco/Crema lucido
Gloss Black/White/Cream

Mosaik:Bianco+Argento+Argento rosato
Mosaik:White+Silverfoil+Pinkish silverfoil

Mosaik:Argento+Argento 2+oro
Mosaik:Silverfoil+Silverfoil 2+Gold

Pannello frontale traforato Bianco/Nero/Crema
Frontal board in White-Black-Cream

BODY MIRROR - MOSAIK

Specchiera a parete
Wall Mirror

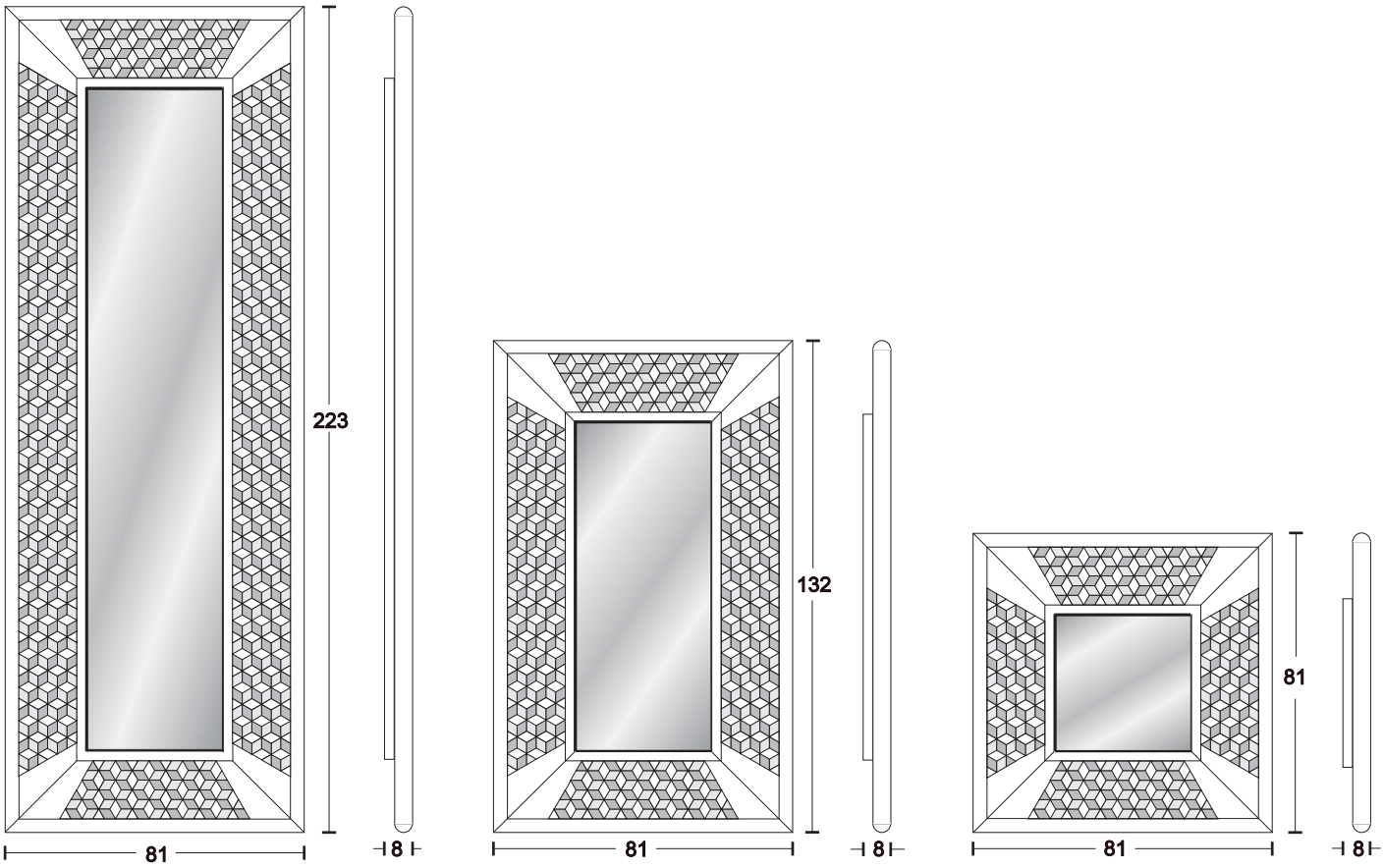

BODY MIRROR 214-MOSAIK

cornice-frame: **€ 6.880,50**
Bianco/Nero/Crema opaco
White/Black/Cream opaque

Mosaik:Bianco+Argento+Argento rosato
Mosaik:White+Silverfoil+Pinkish silverfoil

Mosaik: Argento+Argento 2+oro
Mosaik:Silverfoil+Silverfoil 2+Gold

cornice-frame: **€ 7.212,70**
Nero/Bianco/Crema lucido
Gloss Black/White/Cream

Mosaik:Bianco+Argento+Argento rosato
Mosaik:White+Silverfoil+Pinkish silverfoil

Mosaik:Argento+Argento 2+oro
Mosaik:Silverfoil+Silverfoil 2+Gold

BODY MIRROR 120-MOSAIK

cornice-frame: **€ 4.848,80**
Bianco/Nero/Crema opaco
White/Black/Cream opaque

Mosaik:Bianco+Argento+Argento rosato
Mosaik:White+Silverfoil+Pinkish silverfoil

Mosaik: Argento+Argento 2+oro
Mosaik:Silverfoil+Silverfoil 2+Gold

cornice-frame: **€ 5.087,50**
Nero/Bianco/Crema lucido
Gloss Black/White/Cream

Mosaik:Bianco+Argento+Argento rosato
Mosaik:White+Silverfoil+Pinkish silverfoil

Mosaik:Argento+Argento 2+oro
Mosaik:Silverfoil+Silverfoil 2+Gold

BODY MIRROR 80-MOSAIK

cornice-frame: **€ 3.095,40**
Bianco/Nero/Crema opaco
White/Black/Cream opaque

Mosaik:Bianco+Argento+Argento rosato
Mosaik:White+Silverfoil+Pinkish silverfoil

Mosaik: Argento+Argento 2+oro
Mosaik:Silverfoil+Silverfoil 2+Gold

cornice-frame: **€ 3.228,50**
Nero/Bianco/Crema lucido
Gloss Black/White/Cream

Mosaik:Bianco+Argento+Argento rosato
Mosaik:White+Silverfoil+Pinkish silverfoil

Mosaik:Argento+Argento 2+oro
Mosaik:Silverfoil+Silverfoil 2+Gold

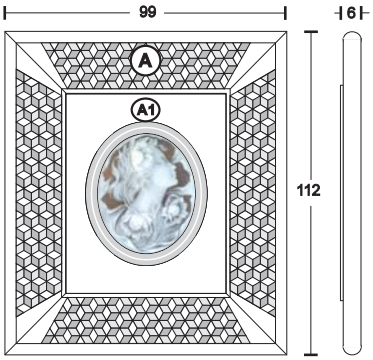

CAMMEO

Ovale con Cammeo (Sinistro o destro)
Oval with Cameo (Left or Right)

(A) Cornice bianco/nero/crema opaco-Mosaik:bianco+Argento+Arg.rosato/Argento+Argento 2+oro foglia
Frame White/Black/Cream opaque-Mosaik:White+Silver foil+pinkish/Silverfoil+silverfoil 2+goldfoil
(A1) tutti i laccati opachi-all opaque laquering **€ 5.245,90**

(A) Cornice bianco/nero/crema lucido-Mosaik:bianco+Argento+Arg.rosato/Argento+Argento 2+oro foglia
Frame White/Black/Cream Gloss-Mosaik:White+Silver foil+pinkish/Silverfoil+silverfoil 2+goldfoil
(A1) tutti i laccati opachi-all opaque laquering **€ 5.351,50**

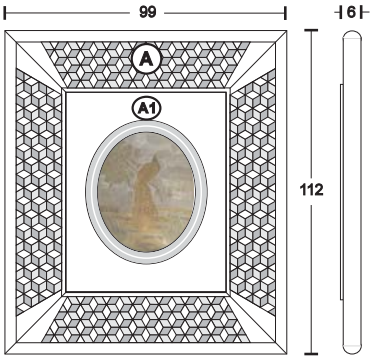

PAVONE

Ovale con Pavone Art oro 12>23 Carati (Sinistro o destro)
Oval with Art peacock Gold 12>23 carats (Left or Right)

(A) Cornice bianco/nero/crema opaco-Mosaik:bianco+Argento+Arg.rosato/Argento+Argento 2+oro foglia
Frame White/Black/Cream opaque-Mosaik:White+Silver foil+pinkish/Silverfoil+silverfoil 2+goldfoil
(A1) tutti i laccati opachi-all opaque laquering **€ 7.058,70**

(A) Cornice bianco/nero/crema lucido-Mosaik:bianco+Argento+Arg.rosato/Argento+Argento 2+oro foglia
Frame White/Black/Cream Gloss-Mosaik:White+Silver foil+pinkish/Silverfoil+silverfoil 2+goldfoil
(A1) tutti i laccati opachi-all opaque laquering **€ 7.159,90**

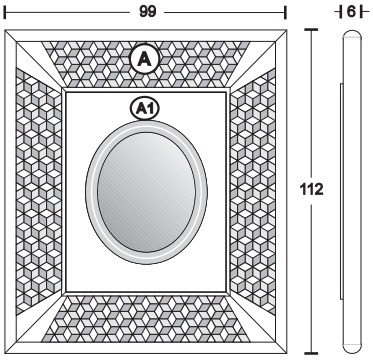

OVAL MIRROR

Ovale con specchio bisellato
Oval with bevelled mirror

(A) Cornice bianco/nero/crema opaco-Mosaik:bianco+Argento+Arg.rosato/Argento+Argento 2+oro foglia
Frame White/Black/Cream opaque-Mosaik:White+Silver foil+pinkish/Silverfoil+silverfoil 2+goldfoil
(A1) tutti i laccati opachi-all opaque laquering-alle Matte Lackierungen **€ 4.994,00**

(A) Cornice bianco/nero/crema lucido-Mosaik:bianco+Argento+Arg.rosato/Argento+Argento 2+oro foglia
Frame White/Black/Cream Gloss-Mosaik:White+Silver foil+pinkish/Silverfoil+silverfoil 2+goldfoil
(A1) tutti i laccati opachi-all opaque laquering **€ 5.100,70**

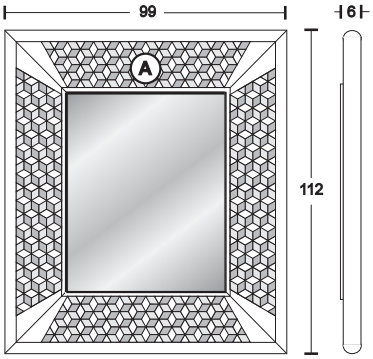

MIRROR

Specchio anticato o normale
Antique mirror or standard

(A) Cornice bianco/nero/crema opaco-Mosaik:bianco+Argento+Arg.rosato/Argento+Argento 2+oro foglia
Frame White/Black/Cream opaque-Mosaik:White+Silver foil+pinkish/Silverfoil+silverfoil 2+goldfoil

€ 5.007,20

(A) Cornice bianco/nero/crema lucido-Mosaik:bianco+Argento+Arg.rosato/Argento+Argento 2+oro foglia
Frame White/Black/Cream Gloss-Mosaik:White+Silver foil+pinkish/Silverfoil+silverfoil 2+goldfoil

€ 5.112,80

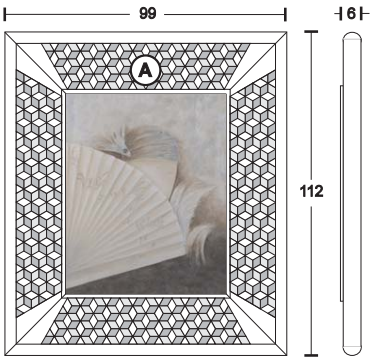

THE FAN

Dipinto materico "Donna con Ventaglio" (Sinistro o destro)
Hand-made Materic painting "Donna con Ventaglio" (Left or Right)

(A) Tutti i laccati opachi-Decorazioni Oro/Argento
all opaque laquering-decoration gold/silver foil **€ 5.353,70**

(A) Nero/Bianco Lucido-Decori Oro/ argento
Gloss Black/White-Gold/Silver Foil Decorations **€ 5.458,20**

CIAIKA -170 MOSAIK

Tavolino porta CD/DVD per 800 Cd (e/o 378 DVD)
Coffee table CD/DVD rack for 800 CD (and or 378 DVD

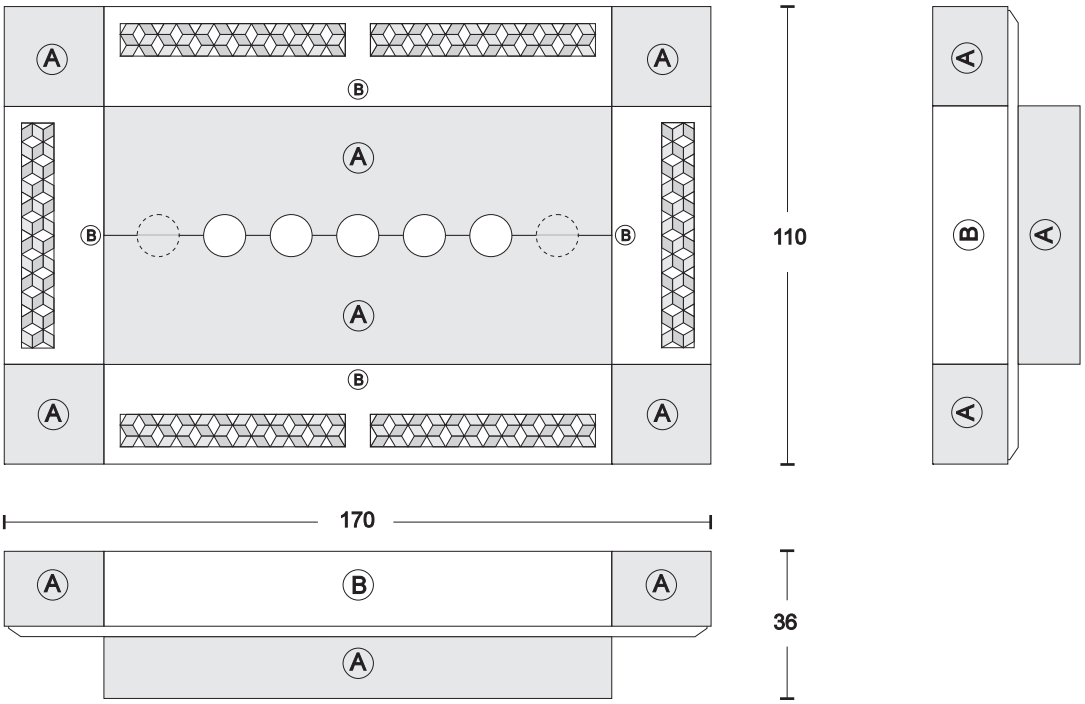

Finiture esterne standard
Outside Standard finishings

A Argento/Oro Foglia Silver/Gold Foil	B Bianco/Nero/Crema Opaco Mosaik:bianco+Argento+Argento rosato Mosaik:Argento+Argento 2+Oro foglia Opaque white/Black/Cream Mosaik:White+Silver foil+Silver-pinkish Mosaik:Silver foil+Silver foil 2+Goldfoil	**€ 7.544,90**
A Argento/Oro Foglia Silver/Gold Foil	B Bianco/Nero/Crema Lucido Mosaik:bianco+Argento+Argento rosato Mosaik:Argento+Argento 2+Oro foglia Gloss white/Black/Cream Mosaik:White+Silver foil+Silver-pinkish Mosaik:Silver foil+Silver foil 2+Goldfoil	**€ 8.063,00**

Finitura superfici interne: METALSILVER/METALGOLD
Finishings of inside surface: METALSILVER/METALGOLD

CIAIKA -110 MOSAIK

Tavolino porta CD/DVD per 490 Cd (e/o 218 DVD)
Coffe table CD/DVD rack for 490 CD (and or 218 DVD)

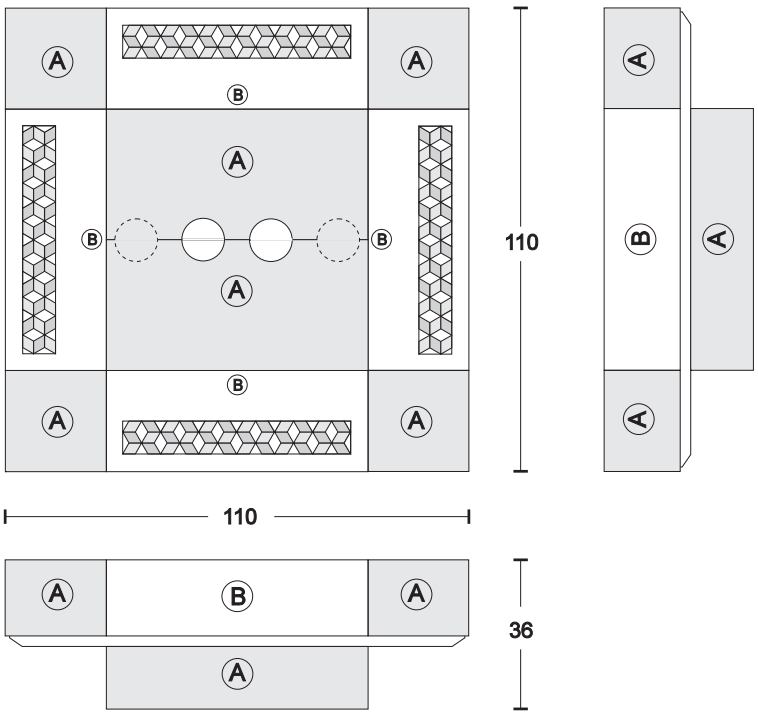

Finiture esterne standard
Outside Standard finishings

Ⓐ Argento/Oro Foglia
Silver/Gold Foil

Ⓑ Bianco/Nero/Crema Opaco
Mosaik:bianco+Argento+Argento rosato
Mosaik:Argento+Argento 2+Oro foglia
Opaque white/Black/Cream
Mosaik:White+Silver foil+Silver-pinkish
Mosaik:Silver foil+Silver foil 2+Goldfoil

€ 6.270,00

Ⓐ Argento/Oro Foglia
Silver/Gold Foil

Ⓑ Bianco/Nero/Crema Lucido
Mosaik:bianco+Argento+Argento rosato
Mosaik:Argento+Argento 2+Oro foglia
Gloss white/Black/Cream
Mosaik:White+Silver foil+Silver-pinkish
Mosaik:Silver foil+Silver foil 2+Goldfoil

€ 6.801,30

Finitura superfici interne: METALSILVER
Finishings of inside surface: METALSILVER

CIAIKA - 110 SLIM - MOSAIK

Tavolino porta CD/DVD per 180 Cd (e/o 92 DVD)
Coffe table CD/DVD rack for 180 CD (and or 92 DVD)

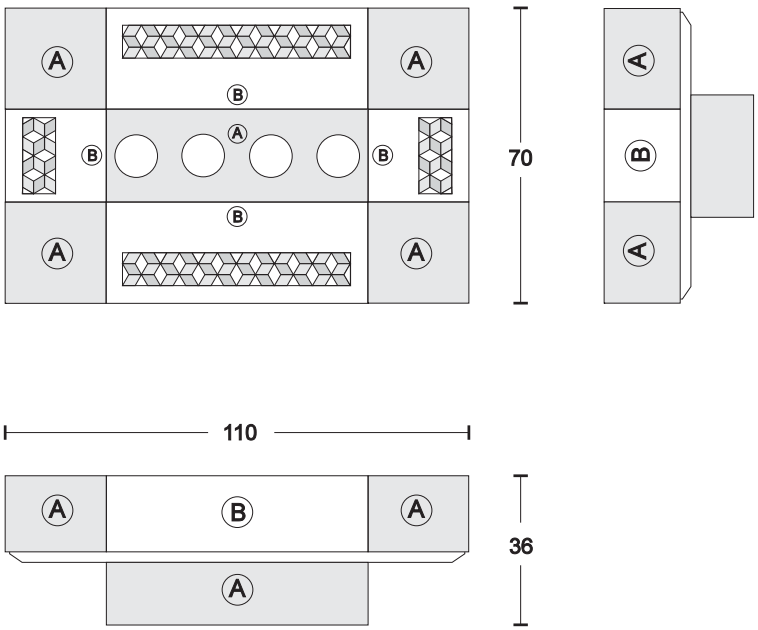

Finiture esterne standard
Outside Standard finishings

Ⓐ Argento/Oro Foglia
Silver/Gold Foil

Ⓑ Bianco/Nero/Crema Opaco
Mosaik:bianco+Argento+Argento rosato
Mosaik:Argento+Argento 2+Oro foglia
Opaque white/Black/Cream
Mosaik:White+Silver foil+Silver-pinkish
Mosaik:Silver foil+Silver foil 2+Goldfoil

€ 5.857,50

Ⓐ Argento/Oro Foglia
Silver/Gold Foil

Ⓑ Bianco/Nero/Crema Lucido
Mosaik:bianco+Argento+Argento rosato
Mosaik:Argento+Argento 2+Oro foglia
Gloss white/Black/Cream
Mosaik:White+Silver foil+Silver-pinkish
Mosaik:Silver foil+Silver foil 2+Goldfoil

€ 6.440,50

Finitura superfici interne: METALSILVER/METALGOLD
Finishings of inside surface: METALSILVER/METALGOLD

1 WINDOWS - COFFEE TABLE - MOSAIK

Tavolino contenitore con vassoi estraibili - Coffee table container removable tray

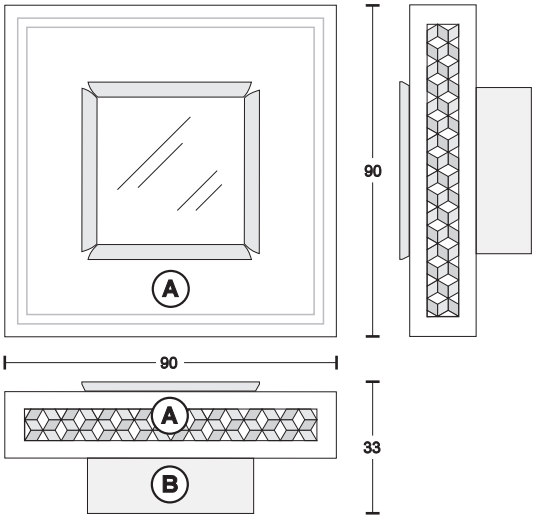

(A) Bianco/Nero/Crema opaco, **€ 3.426,50**
decori oro/argento foglia - vassoi in vetro temperato,
maniglie oro/argento foglia
- Mosaik: bianco+Argento+Arg.rosato
- Mosaik: Argento+Argento 2+oro foglia
Opaque White/Black/Cream,
decoration gold/silver foil - Ardened Glass Trays,
handles gold/silver foil
- Mosaik: White+Silver foil+Silver-pinkish
- Mosaik: Silverfoil+silverfoil 2+goldfoil

(B) Bianco/Nero/Crema opaco-Opaque White/Black/Cream
Matte Weiss/Schwarz/Creme

(A) Bianco/Nero lucido **€ 3.932,50**
decori oro/argento foglia - vassoi in vetro temperato,
maniglie oro/argento foglia
- Mosaik: bianco+Argento+Arg.rosato
- Mosaik: Argento+Argento 2+oro foglia
Gloss White/Black,
decoration gold/silver foil - Ardened Glass Trays,
handles gold/silver foil
- Mosaik: White+Silver foil+Silver-pinkish
- Mosaik: Silverfoil+silverfoil 2+goldfoil

(B) Bianco/Nero lucido-Gloss White/Black

2 WINDOWS - COFFEE TABLE - MOSAIK

Tavolino contenitore con vassoi estraibili - Coffee table container removable tray

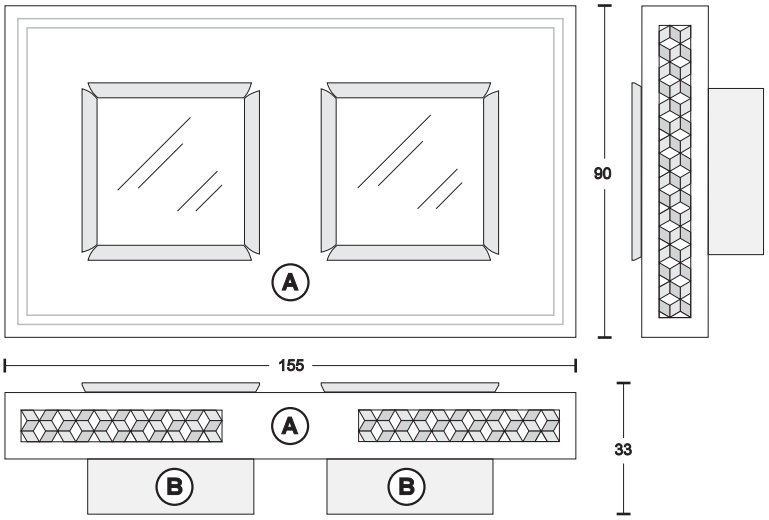

(A) Bianco/Nero/Crema opaco - decori oro/argento foglia - vassoi in vetro temperato - maniglie oro/argento foglia **€ 5.302,00**
- Mosaik: bianco+Argento+Arg.rosato - Mosaik: Argento+Argento 2+oro foglia
Opaque White/Black/Cream - decoration gold/silver foil - Ardened Glass Trays - handles gold/silver foil
- Mosaik: White+Silver foil+Silver-pinkish - Mosaik: Silverfoil+silverfoil 2+goldfoil

(B) Bianco/Nero/Crema opaco-Opaque White/Black/Cream

(A) Bianco/nero lucido - decori oro/argento foglia - vassoi in vetro temperato - maniglie oro/argento foglia **€ 6.110,50**
- Mosaik: Argento+Argento 2+oro foglia - Mosaik: Argento+Argento 2+oro foglia
Gloss white/black - decoration gold/silver foil - Ardened Glass Trays - handles gold/silver foil
- Mosaik: Silverfoil+silverfoil 2+goldfoil - Mosaik: White+Silver foil+Silver-pinkish

(D) Bianco/Nero lucido-Gloss White/Black

4 WINDOWS - COFFEE TABLE - MOSAIK

Tavolino contenitore con vassoi estraibili - Coffee table container removable tray

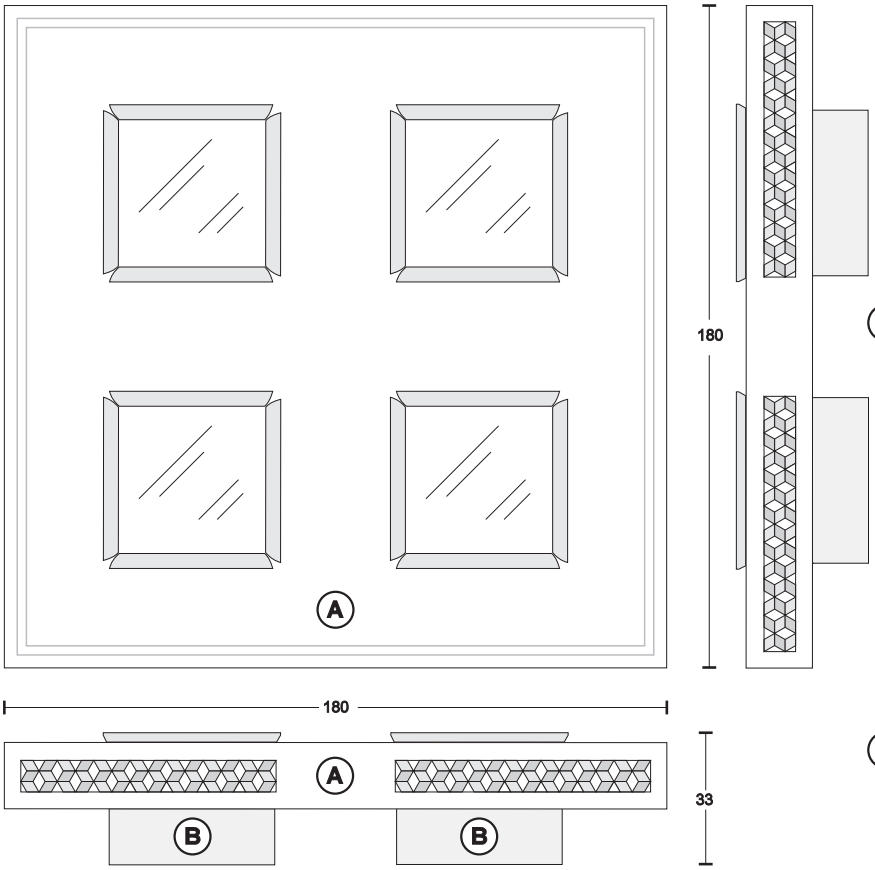

(A) Bianco/Nero/Crema opaco, **€ 9.790,00**
decori oro/argento foglia-vassoi in vetro temperato
maniglie oro/argento foglia
- Mosaik: bianco+Argento+Arg.rosato
- Mosaik: Argento+Argento 2+oro foglia
Opaque White/Black/Cream,
decoration gold/silver foil-Ardened Glass Trays
handles gold/silver foil
- Mosaik: White+Silver foil+Silver-pinkish
- Mosaik: Silverfoil+silverfoil 2+goldfoil

(B) Bianco/Nero/Crema opaco
Opaque White/Black/Cream

(A) Bianco/Nero lucido **€ 10.994,50**
decori oro/argento foglia-vassoi in vetro temperato
maniglie oro/argento foglia
- Mosaik: bianco+Argento+Arg.rosato
- Mosaik: Argento+Argento 2+oro foglia
Gloss White/Black,
decoration gold/silver foil-Ardened Glass Trays,
handles gold/silver foil
- Mosaik:White+Silver foil+Silver-pinkish
- Mosaik:Silverfoil+silverfoil 2+goldfoil

(B) Bianco/Nero lucido-Gloss White/Black

3 WINDOWS - COFFEE TABLE - MOSAIK

Tavolino contenitore con vassoi estraibili - Coffee table container removable tray

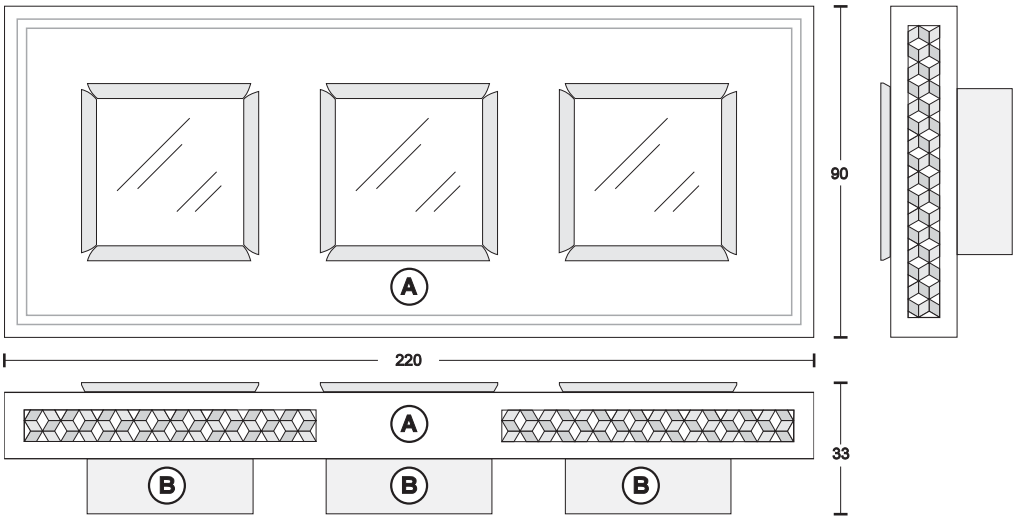

(A) Bianco/Nero/Crema opaco - decori oro/argento foglia - vassoi in vetro temperato - maniglie oro/argento foglia **€ 7.529,50**
- Mosaik: bianco+Argento+Arg.rosato - Mosaik: Argento+Argento 2+oro foglia
Opaque White/Black/Cream - decoration gold/silver foil - Ardened Glass Trays Trays - handles gold/silver foil
- Mosaik: White+Silver foil+Silver-pinkish - Mosaik: Silverfoil+silverfoil 2+goldfoil

(B) Bianco/Nero/Crema opaco-Opaque White/Black/Cream

(A) Bianco/nero lucido - decori oro/argento foglia - vassoi in vetro temperato - maniglie oro/argento foglia **€ 8.640,50**
- Mosaik: Argento+Argento 2+oro foglia - Mosaik: Argento+Argento 2+oro foglia
Gloss white/black - decoration gold/silver foil - Ardened Glass Trays - handles gold/silver foil
- Mosaik: Silverfoil+silverfoil 2+goldfoil - Mosaik: White+Silver foil+Silver-pinkish

(B) Bianco/Nero lucido-Gloss White/Black

FLOWER 60 - MOSAIK

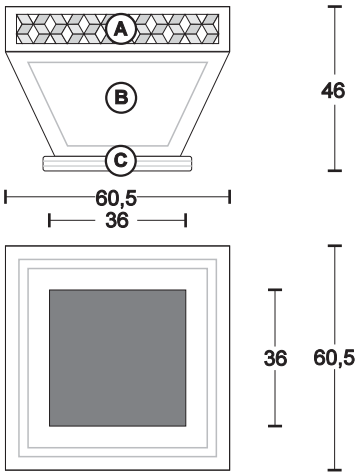

(A) Bianco/Nero/Crema Opaco - Opaque White/Black/Cream
Mosaik: Bianco+Argento+Argento rosato - White+Silverfoil+Pinkish silverfoil
Mosaik: Argento+Argento 2+oro foglia - Silverfoil+silverfoil 2+Goldfoil

(B)+(C) Bianco/Nero/Crema Opaco-Decorazioni Oro/Argento Foglia — € 2.533,30
Opaque White/Black/Cream-decoration Gold foil/silver foil

(A) Bianco/Nero/Crema Lucido - Gloss White/Black/Cream
Mosaik: Bianco+Argento+Argento rosato - White+Silverfoil+Pinkish silverfoil
Mosaik: Argento+Argento 2+oro foglia - Silverfoil+silverfoil 2+Goldfoil

(B)+(C) Bianco/Nero/Crema Opaco-Decorazioni Oro/Argento Foglia — € 2.654,30
Opaque White/Black/Cream-decoration Gold foil/silver foil

Completo di vasca metallica zincata-including galvanized metal tank

VASE 90 - MOSAIK

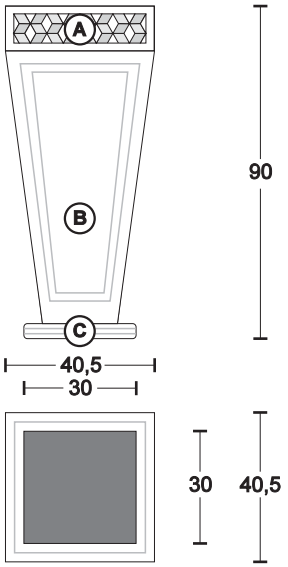

(A) Bianco/Nero/Crema Opaco - Opaque White/Black/Cream
Mosaik: Bianco+Argento+Argento rosato - White+Silverfoil+Pinkish silverfoil
Mosaik: Argento+Argento 2+oro foglia - Silverfoil+silverfoil 2+Goldfoil

(B)+(C) Bianco/Nero/Crema Opaco-Decorazioni Oro/Argento Foglia — € 2.352,90
Opaque White/Black/Cream-decoration Gold foil/silver foil

(A) Bianco/Nero/Crema Lucido - Gloss White/Black/Cream
Mosaik: Bianco+Argento+Argento rosato - White+Silverfoil+Pinkish silverfoil
Mosaik: Argento+Argento 2+oro foglia - Silverfoil+silverfoil 2+Goldfoil

(B)+(C) Bianco/Nero/Crema Opaco-Decorazioni Oro/Argento Foglia — € 2.484,90
Opaque White/Black/Cream-decoration Gold foil/silver foil

Completo di vasca metallica zincata oppure chiusura top per colonna
including galvanized metal tank or top as column

VASE 125 - MOSAIK

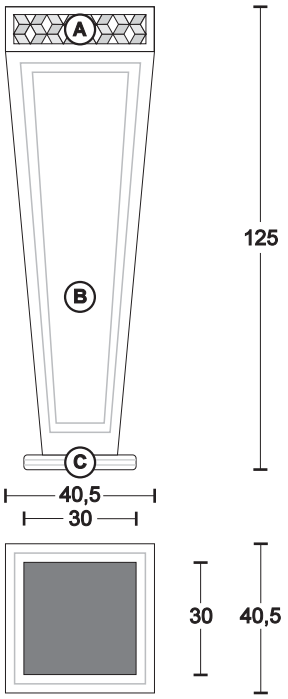

(A) Bianco/Nero/Crema Opaco - Opaque White/Black/Cream
Mosaik: Bianco+Argento+Argento rosato - White+Silverfoil+Pinkish silverfoil
Mosaik: Argento+Argento 2+oro foglia - Silverfoil+silverfoil 2+Goldfoil

(B)+(C) Bianco/Nero/Crema Opaco-Decorazioni Oro/Argento Foglia
Opaque White/Black/Cream-decoration Gold foil/silver foil — € 2.517,90

(A) Bianco/Nero/Crema Lucido - Gloss White/Black/Cream
Mosaik: Bianco+Argento+Argento rosato - White+Silverfoil+Pinkish silverfoil
Mosaik: Argento+Argento 2+oro foglia - Silverfoil+silverfoil 2+Goldfoil

(B)+(C) Bianco/Nero/Crema Opaco-Decorazioni Oro/Argento Foglia
Opaque White/Black/Cream-decoration Gold foil/silver foil — € 2.643,30

Completo di vasca metallica zincata oppure chiusura top per colonna
including galvanized metal tank or top as column

FLOWER 60 - BRAZIER - MOSAIK

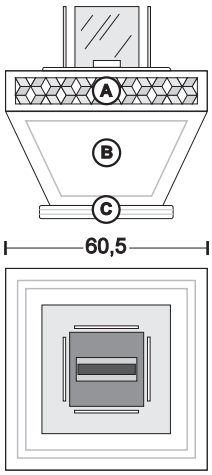

(A) Bianco/Nero/Crema Opaco - Opaque White/Black/Cream
Mosaik: Bianco+Argento+Argento rosato - White+Silverfoil+Pinkish silverfoil
Mosaik: Argento+Argento 2+oro - Silverfoil+silverfoil 2+Gold

(B)+(C) Bianco/Nero/Crema Opaco-Decorazioni Oro/Argento Foglia — € 4.056,80
Opaque White/Black/Cream-decoration Gold foil/silver foil

(A) Bianco/Nero/Crema Lucido - Gloss White/Black/Cream
Mosaik: Bianco+Argento+Argento rosato - White+Silverfoil+Pinkish silverfoil
Mosaik: Argento+Argento 2+oro - Silverfoil+silverfoil 2+Gold

(B)+(C) Bianco/Nero/Crema Opaco-Decorazioni Oro/Argento Foglia — € 4.172,30
Opaque White/Black/Cream-decoration Gold foil/silver foil

Con braciere a bio-alcol removibile-completo di vetri temperati
Complete of bio-alcohol removable brazier-complete of tempered glass

VASE 90 - BRAZIER - MOSAIK

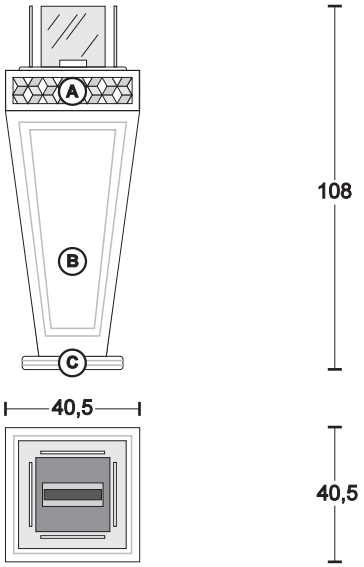

(A) Bianco/Nero/Crema Opaco - Opaque White/Black/Cream
Mosaik: Bianco+Argento+Argento rosato - White+Silverfoil+Pinkish silverfoil
Mosaik: Argento+Argento 2+oro - Silverfoil+silverfoil 2+Gold

(B)+(C) Bianco/Nero/Crema Opaco-Decorazioni Oro/Argento Foglia — € 3.884,10
Opaque White/Black/Cream-decoration Gold foil/silver foil

(A) Bianco/Nero/Crema Lucido - Gloss White/Black/Cream
Mosaik: Bianco+Argento+Argento rosato - White+Silverfoil+Pinkish silverfoil
Mosaik: Argento+Argento 2+oro - Silverfoil+silverfoil 2+Gold

(B)+(C) Bianco/Nero/Crema Opaco-Decorazioni Oro/Argento Foglia — € 4.010,60
Opaque White/Black/Cream-decoration Gold foil/silver foil

Con braciere a bio-alcol removibile-completo di vetri temperati
Complete of bio-alcohol removable brazier-complete of tempered glass

VASE 125 - BRAZIER - MOSAIK

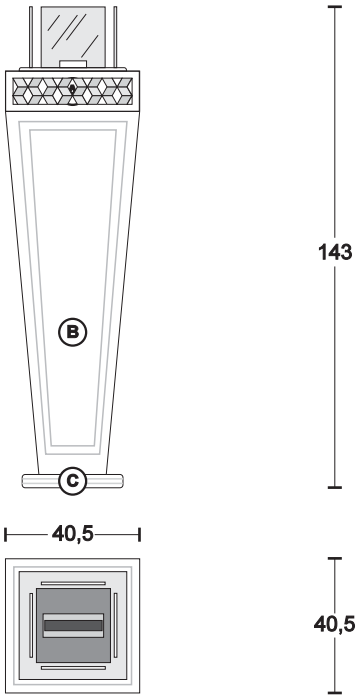

(A) Bianco/Nero/Crema Opaco - Opaque White/Black/Cream
Mosaik: Bianco+Argento+Argento rosato - White+Silverfoil+Pinkish silverfoil
Mosaik: Argento+Argento 2+oro - Silverfoil+silverfoil 2+Gold

(B)+(C) Bianco/Nero/Crema Opaco-Decorazioni Oro/Argento Foglia
Opaque White/Black/Cream-decoration Gold foil/silver foil
€ 4.041,40

(A) Bianco/Nero/Crema Lucido - Gloss White/Black/Cream
Mosaik: Bianco+Argento+Argento rosato - White+Silverfoil+Pinkish silverfoil
Mosaik: Argento+Argento 2+oro - Silverfoil+silverfoil 2+Gold

(B)+(C) Bianco/Nero/Crema Opaco-Decorazioni Oro/Argento Foglia
Opaque White/Black/Cream-decoration Gold foil/silver foil
€ 4.162,40

Con braciere a bio-alcol removibile-completo di vetri temperati
Complete of bio-alcohol removable brazier-complete of tempered glass

CHEST-NOUVEAU-282 MOSAIK DIVANO - SOFA

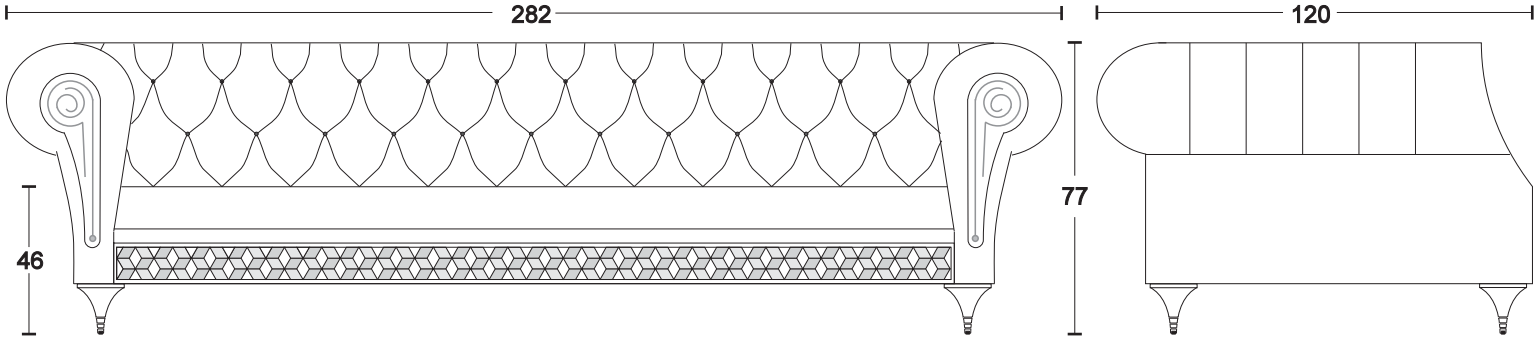

Pelle-Leather cat."SOFT"	Pelle-Leather cat."EXTRA"	Pelle-Leather cat."GLAM"
€ 14.773,00	€ 15.966,50	€ 17.523,00
Eco Nabuk Eco Nubuk	Velluto Velvet	
€ 12.713,80	€ 14.149,30	

CHEST-NOUVEAU-209 MOSAIK DIVANO - SOFA

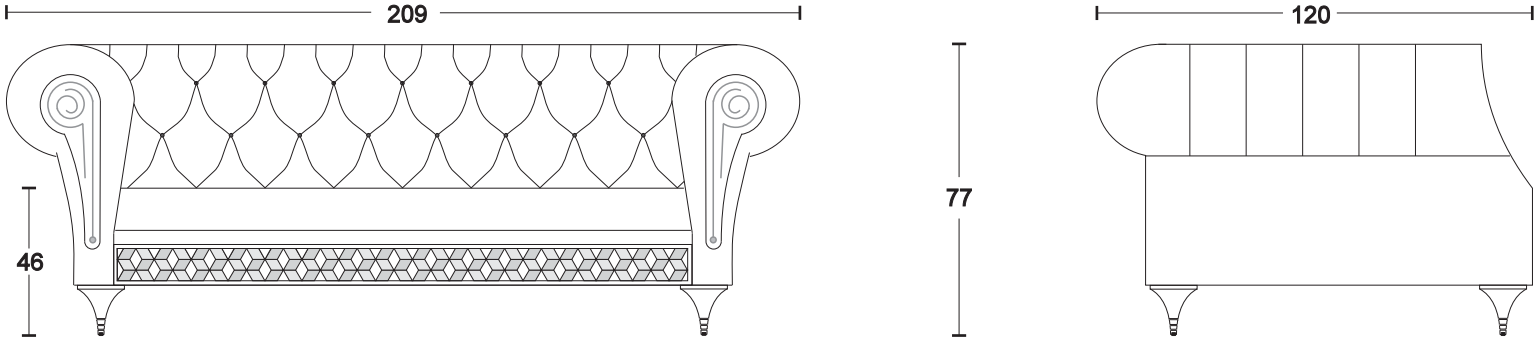

Pelle-Leather cat."SOFT"	Pelle-Leather cat."EXTRA"	Pelle-Leather cat."GLAM"
€ 11.775,50	€ 12.881,00	€ 13.992,00
Eco Nabuk Eco Nubuk	Velluto Velvet	
€ 10.411,50	€ 11.464,20	

CHEST-NOUVEAU-123 MOSAIK POLTRONA - ARMCHAIR

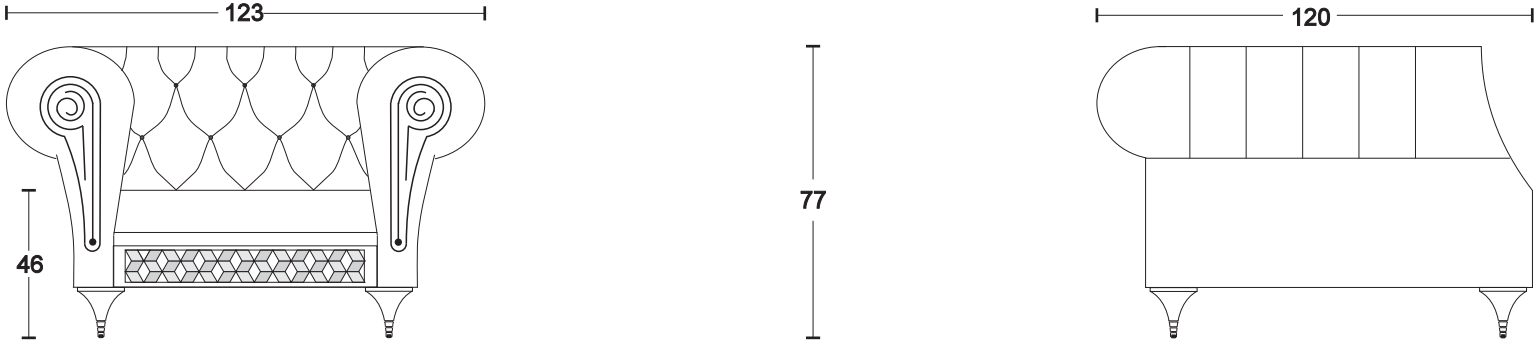

Pelle-Leather cat."SOFT"	Pelle-Leather cat."EXTRA"	Pelle-Leather cat."GLAM"
€ 9.663,50	€ 10.472,00	€ 11.423,50
Eco Nabuk Eco Nubuk	Velluto Velvet	
€ 7.817,70	€ 8.735,10	

CHEST NOUVEAU - MOSAIK

CHAISE LOUNGE - DX

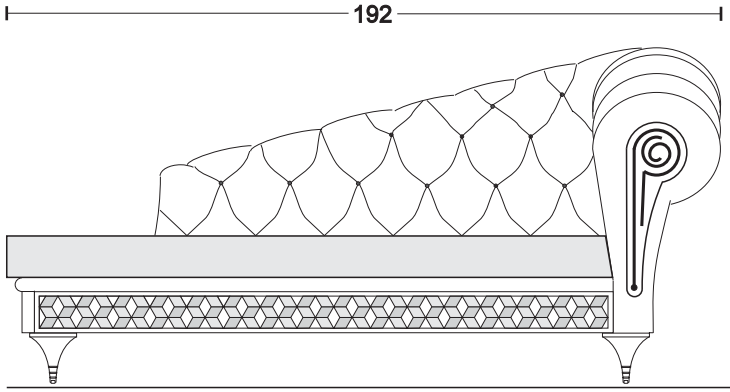

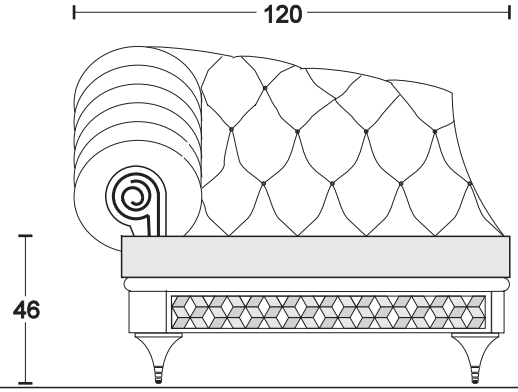

Pelle-Leather cat."SOFT"	Pelle-Leather cat."EXTRA"	Pelle-Leather cat."GLAM"
€ 11.759,00	€ 12.853,50	€ 13.953,50
Eco Nabuk Eco Nubuk	Velluto Velvet	
€ 9.583,20	€ 10.684,30	

CHEST NOUVEAU - MOSAIK

CHAISE LOUNGE - SX

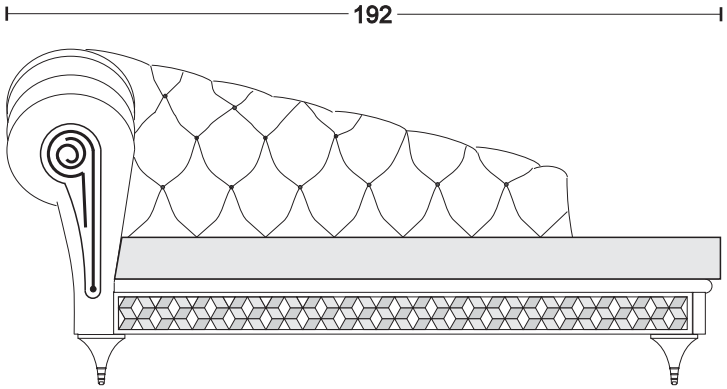

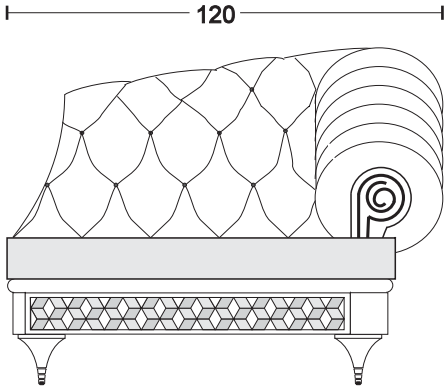

Pelle-Leather cat."SOFT"	Pelle-Leather cat."EXTRA"	Pelle-Leather cat."GLAM"
€ 10.699,00	€ 12.665,60	€ 12.665,60
Eco Nabuk Eco Nubuk	Velluto Velvet	
€ 9.583,20	€ 10.684,30	

CHEST NOUVEAU

Pelle Leather cat.SOFT	Pelle Leather cat.EXTRA	Pelle Leather cat.GLAM	Eco Nabuk Eco Nubuk	Velluto Velvet
€ 495,00	€ 583,00	€ 676,50	€ 284,90	€ 367,40

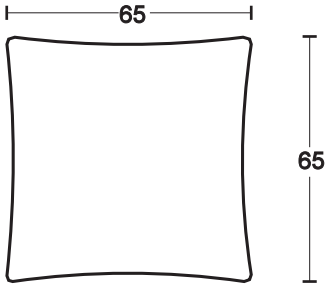

EXTRA CUSCINO - EXTRA CUSCION 65-55-45

Pelle Leather cat.SOFT	Pelle Leather cat.EXTRA	Pelle Leather cat.GLAM	Eco Nabuk Eco Nubuk	Velluto Velvet
€ 456,50	€ 533,50	€ 632,50	€ 266,20	€ 335,50

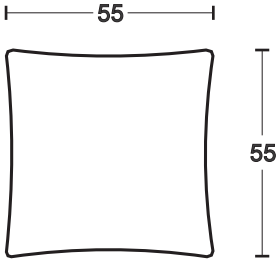

Pelle Leather cat.SOFT	Pelle Leather cat.EXTRA	Pelle Leather cat.GLAM	Eco Nabuk Eco Nubuk	Velluto Velvet
€ 412,50	€ 484,00	€ 561,00	€ 242,00	€ 303,60

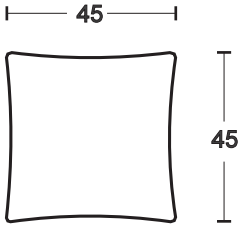

CONFORT NOUVEAU-264 MOSAIK DIVANO - SOFA

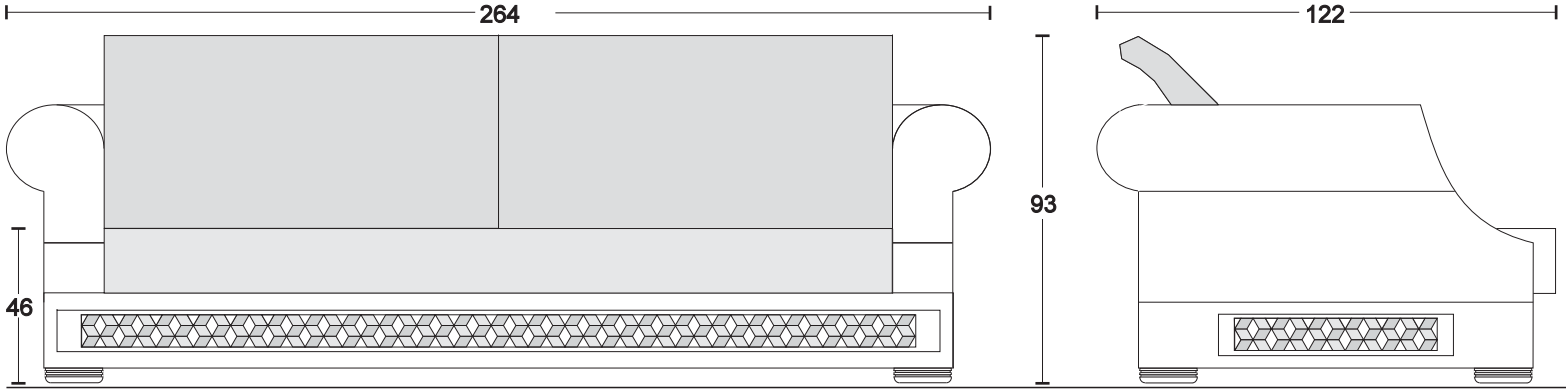

Pelle-Leather cat."SOFT"	Pelle-Leather cat."EXTRA"	Pelle-Leather cat."GLAM"
€ 12.457,50	€ 13.722,50	€ 15.130,50
Eco Nabuk Eco Nubuk	Velluto Velvet	
€ 9.880,20	€ 11.341,00	

CONFORT NOUVEAU-193 MOSAIK DIVANO - SOFA

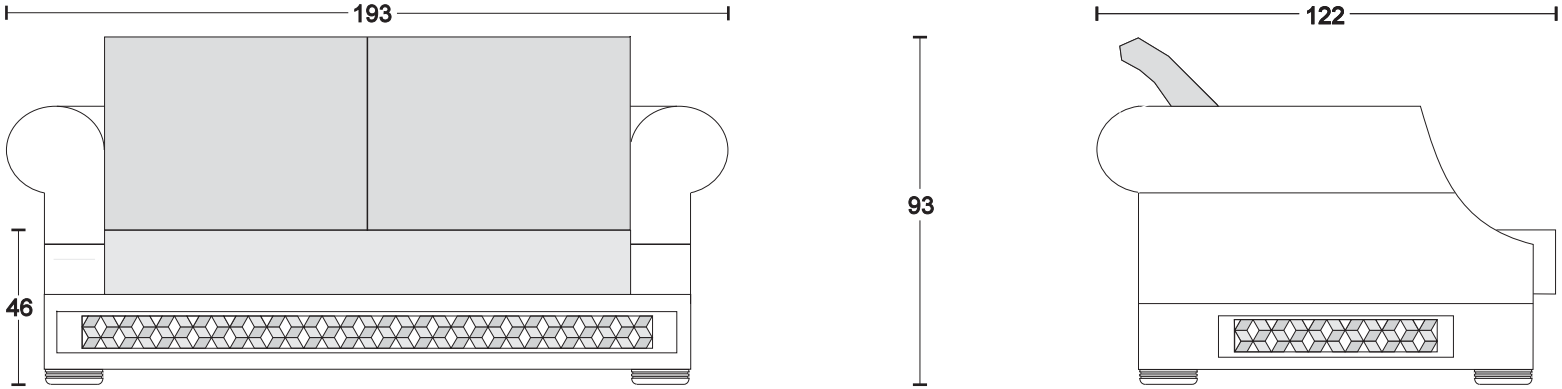

Pelle-Leather cat."SOFT"	Pelle-Leather cat."EXTRA"	Pelle-Leather cat."GLAM"
€ 10.450,00	€ 11.511,50	€ 12.804,00
Eco Nabuk Eco Nubuk	Velluto Velvet	
€ 8.349,00	€ 9.625,00	

CONFORT NOUVEAU-125 MOSAIK POLTRONA - ARMCHAIR

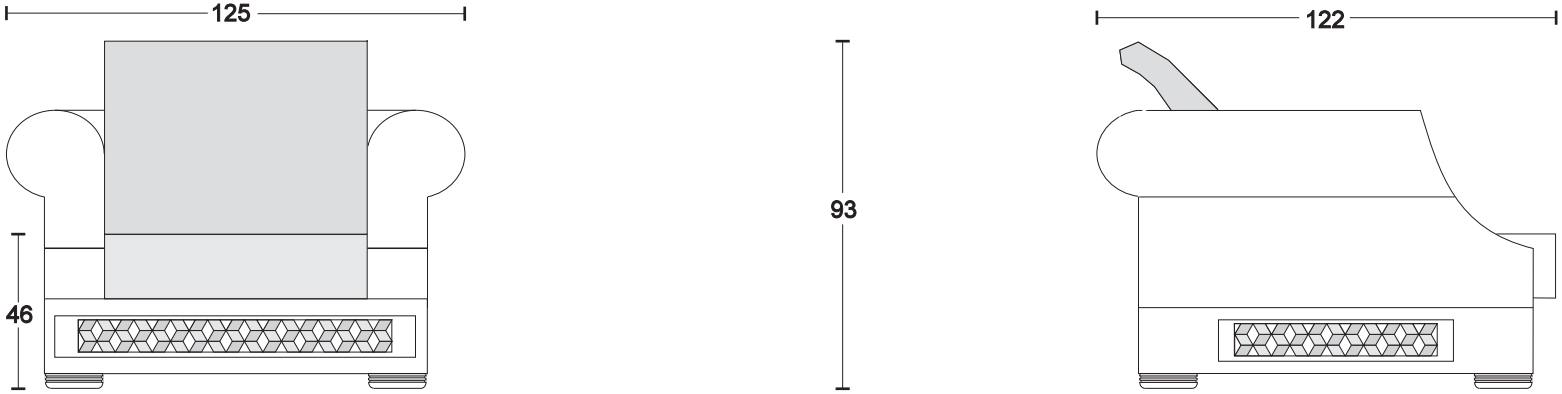

Pelle-Leather cat."SOFT"	Pelle-Leather cat."EXTRA"	Pelle-Leather cat."GLAM"
€ 7.980,50	€ 8.844,00	€ 9.586,50
Eco Nabuk Eco Nubuk	Velluto Velvet	
€ 6.552,70	€ 7.470,10	

CONFORT NOUVEAU-264 LUMBAR CUSHION MOSAIK — DIVANO - SOFA

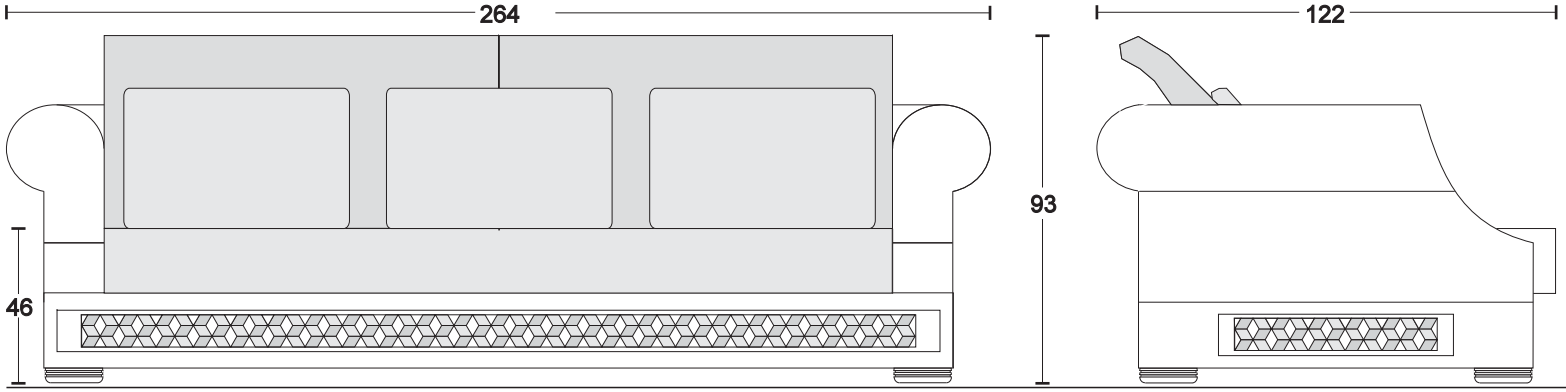

Pelle-Leather cat."SOFT"	Pelle-Leather cat."EXTRA"	Pelle-Leather cat."GLAM"
€ 13.596,00	€ 15.053,50	€ 16.648,50
Eco Nabuk Eco Nubuk	Velluto Velvet	
€ 10.639,20	€ 12.277,10	

CONFORT NOUVEAU-193 LUMBAR CUSHION MOSAIK — DIVANO - SOFA

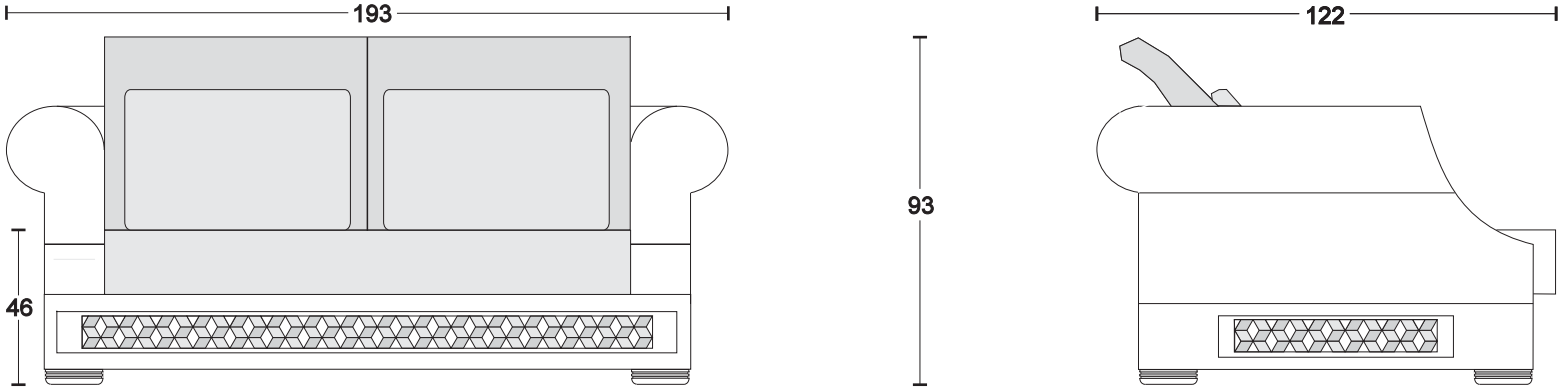

Pelle-Leather cat."SOFT"	Pelle-Leather cat."EXTRA"	Pelle-Leather cat."GLAM"
€ 11.209,00	€ 12.397,00	€ 13.816,00
Eco Nabuk Eco Nubuk	Velluto Velvet	
€ 8.855,00	€ 10.244,30	

CONFORT NOUVEAU-125 LUMBAR CUSHION MOSAIK — POLTRONA - ARMCHAIR

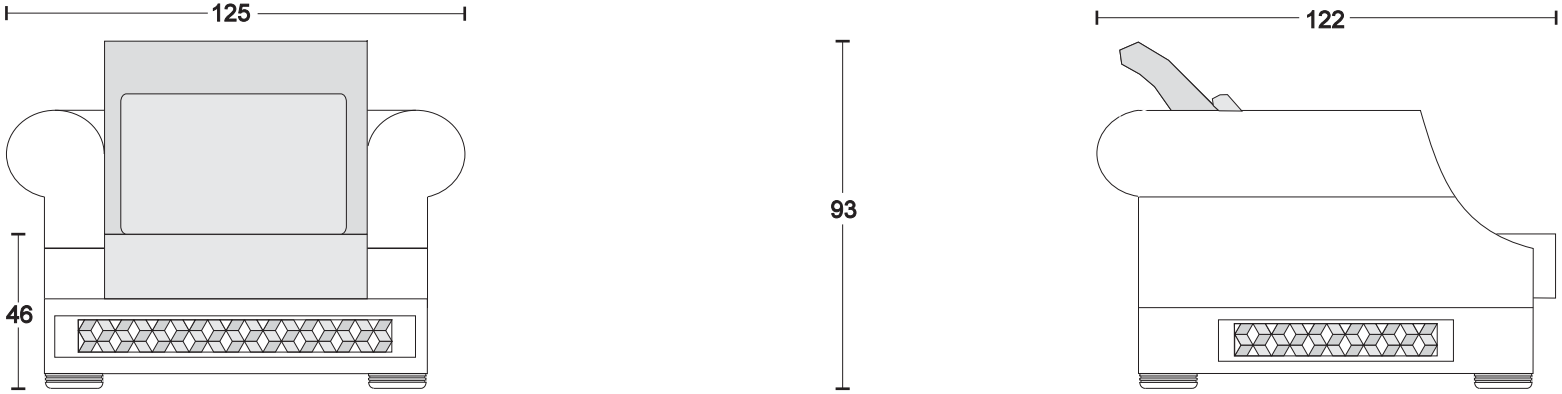

Pelle-Leather cat."SOFT"	Pelle-Leather cat."EXTRA"	Pelle-Leather cat."GLAM"
€ 8.360,00	€ 9.284,00	€ 10.092,50
Eco Nabuk Eco Nubuk	Velluto Velvet	
€ 6.805,70	€ 7.780,30	

CONFORT NOUVEAU- MOSAIK CHAISE LOUNGE - DX

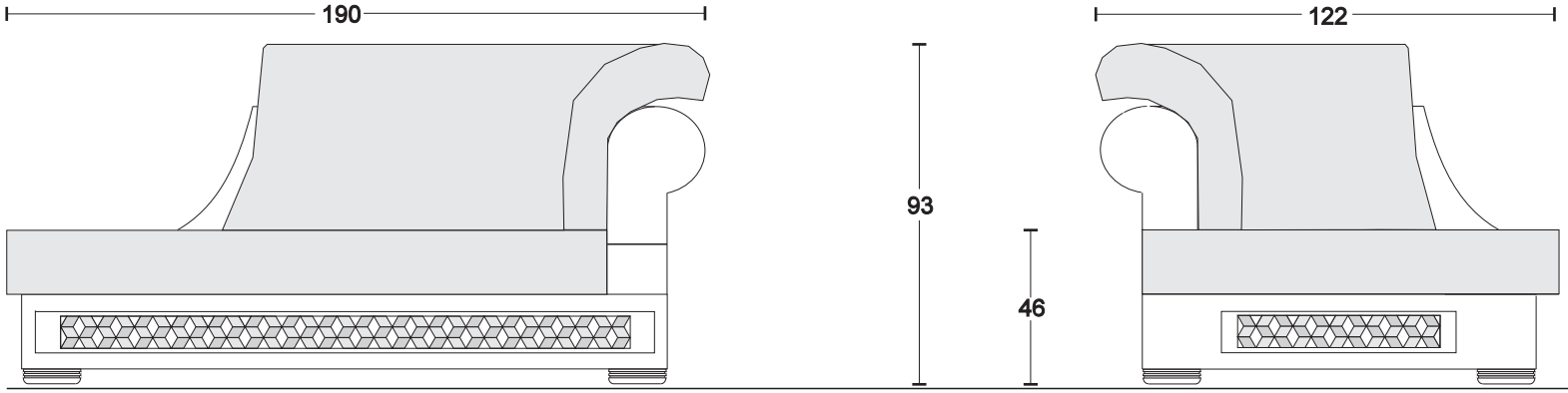

Pelle-Leather cat."SOFT"	Pelle-Leather cat."EXTRA"	Pelle-Leather cat."GLAM"
€ 10.472,00	€ 11.412,50	€ 12.474,00
Eco Nabuk Eco Nubuk	Velluto Velvet	
€ 8.665,80	€ 9.769,10	

CONFORT NOUVEAU- MOSAIK CHAISE LOUNGE - SX

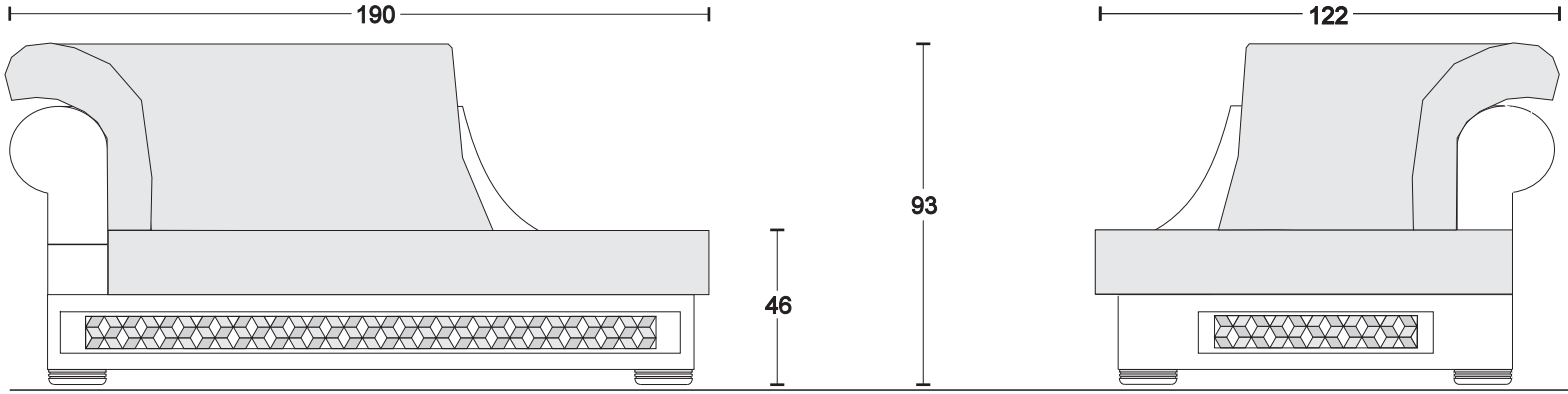

Pelle-Leather cat."SOFT"	Pelle-Leather cat."EXTRA"	Pelle-Leather cat."GLAM"
€ 10.472,00	€ 11.412,50	€ 12.474,00
Eco Nabuk Eco Nubuk	Velluto Velvet	
€ 8.665,80	€ 9.769,10	

CONFORT NOUVEAU

Pelle Leather cat.SOFT	Pelle Leather cat.EXTRA	Pelle Leather cat.GLAM	Eco Nabuk Eco Nubuk	Velluto Velvet
€ 495,00	€ 583,00	€ 676,50	€ 284,90	€ 367,40

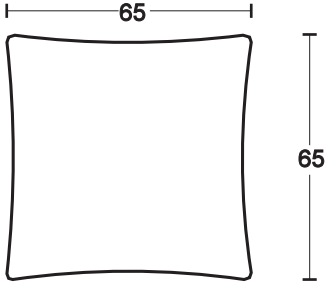

EXTRA CUSCINO - EXTRA CUSCION 65-55-45

Pelle Leather cat.SOFT	Pelle Leather cat.EXTRA	Pelle Leather cat.GLAM	Eco Nabuk Eco Nubuk	Velluto Velvet
€ 456,50	€ 533,50	€ 632,50	€ 266,20	€ 335,50

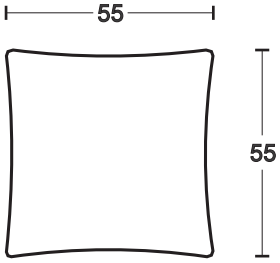

Pelle Leather cat.SOFT	Pelle Leather cat.EXTRA	Pelle Leather cat.GLAM	Eco Nabuk Eco Nubuk	Velluto Velvet
€ 412,50	€ 484,00	€ 561,00	€ 242,00	€ 303,60

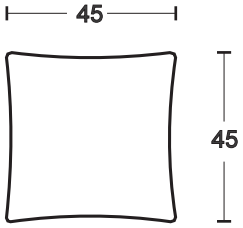

PLAY ROOM - POOL TABLE 10-12 FEET - MOSAIK

10 piedi dimensioni campo gioco cm. 284 x 142 - Dimensioni esterne cm. 320 x 178 - Russo H. 80; Snooker inglese H. 80; Americano H. 78
10 Feet playng fiel dimention cm. 284 x 142 - External dimention cm. 320 x 178 - Russian H. 80; English Snooker H. 80; American H. 78
Con piano in ardesia 40 mm - With playground stone slate 40 mm

12 piedi dimensioni campo gioco cm. 355 x 177 - Dimensioni esterne cm. 391 x 213 - Russo H. 80; Snooker inglese H. 80; Americano H. 78
12 Feet playng fiel dimention cm. 355 x 177 - External dimention cm. 391 x 213 - Russian H. 80; English Snooker H. 80; American H. 78
Con piano in ardesia 40 mm - With playground stone slate 40 mm

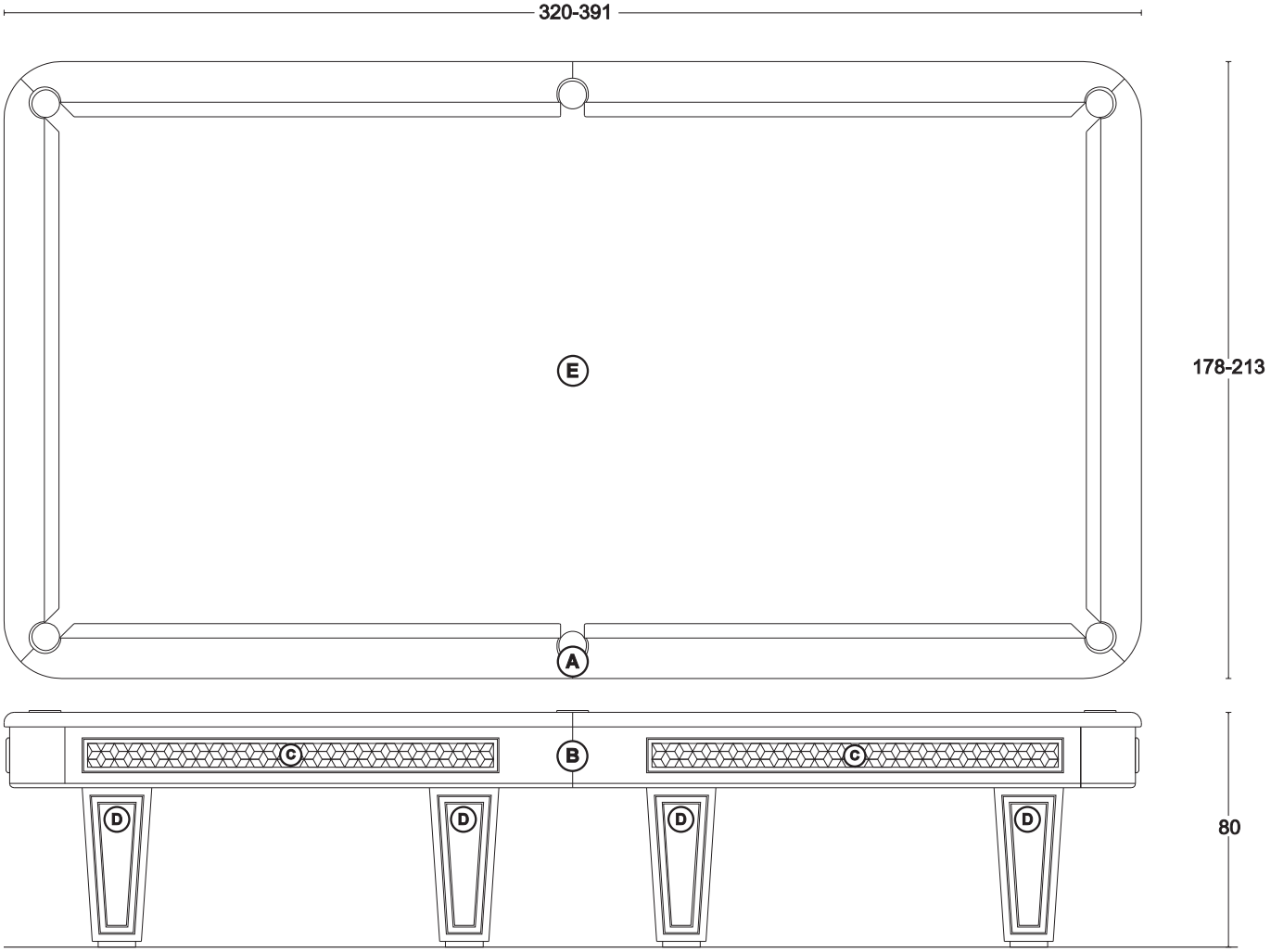

A+B+D Tutti i Laccato opaco — D Decorazioni: Oro/Argento foglia
All Opaque laquered — D Decoration: Gold/Silver foil

C Inserti: Mosaik - Bianco+Argento+Argento rosato - Argento+Argento 2+oro
Insert: Mosaik - White+Silverfoil+Pinkish silverfoil - Silverfoil+Silverfoil 2+Gold

E Tappeto biliardo colori diversi - Pool table cloth different colours

10 PIEDI-10 FEET € 64.262,00
12 PIEDI-12 FEET € 76.153,00

A+B+D Tutti i Laccato lucido — D Decorazioni: Oro/Argento foglia
All Glossy laquered — D Decoration: Gold/Silver foil

C Inserti: Mosaik - Bianco+Argento+Argento rosato - Argento+Argento 2+oro
Insert: Mosaik - White+Silverfoil+Pinkish silverfoil - Silverfoil+Silverfoil 2+Gold

E Tappeto biliardo colori diversi - Pool table cloth different colours

10 PIEDI-10 FEET € 65.400,50
12 PIEDI-12 FEET € 77.291,50

PLAY ROOM - POOL LAMP 10-12 FEET - MOSAIK

Lampada a LED per biliardo da 10-12 piedi - 170 Watt - peso kg. 85
LED Lamp for Pool 10-12 Feet - 170 Watt - Weight Kg. 85

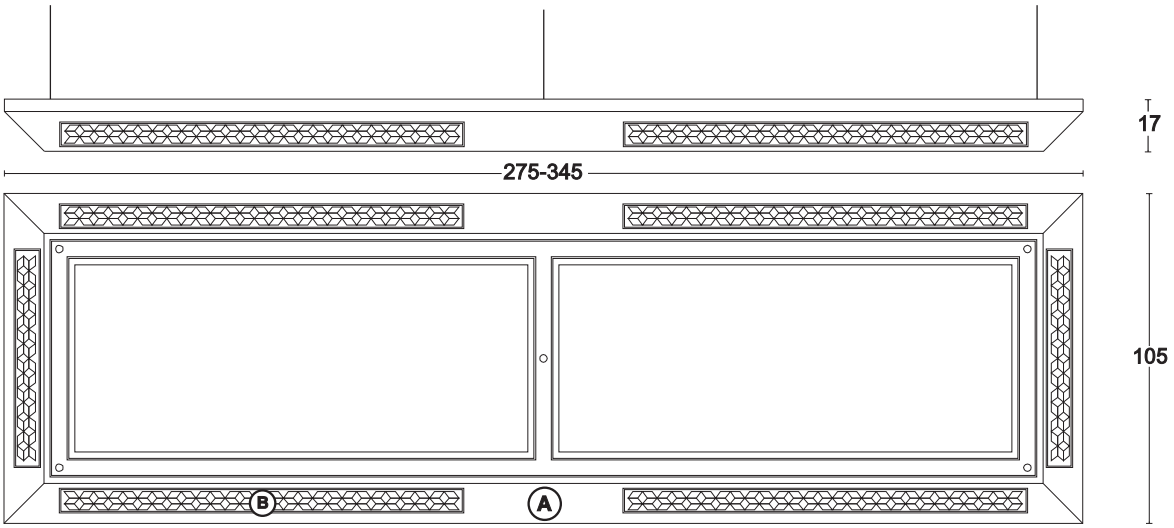

(A) Tutti i Laccato opaco - Decorazioni: anche in Oro/Argento foglia — **€ 13.788,50**
All Opaque laquered - Decoration: Also Gold/Silver foil

(B) Inserti: Mosaik - Bianco+Argento+Argento rosato - Argento+Argento 2+oro
Insert: Mosaik - White+Silverfoil+Pinkish silverfoil - Silverfoil+Silverfoil 2+Gold

(A) Tutti i Laccato lucido - Decorazioni: anche in Oro/Argento foglia — **€ 14.800,50**
All Glossy laquered - Decoration: Also in Gold/Silver foil

(B) Inserti: Mosaik - Bianco+Argento+Argento rosato - Argento+Argento 2+oro
Insert: Mosaik - White+Silverfoil+Pinkish silverfoil - Silverfoil+Silverfoil 2+Gold

CUE RACK-BODY-R - MOSAIK

Porta stecche per biliardo da 10-12 piedi con orologio al quarzo
Pool Cue Rack for 10-12 Feet with quarz clock

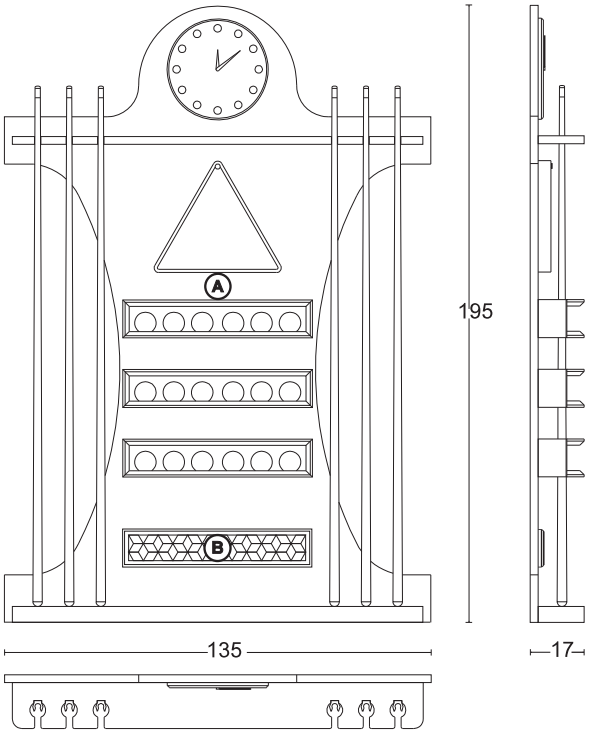

(A) Tutti i Laccato opaco - All Opaque laquered — **€ 5.250,30**

(B) Inserti: Mosaik - Bianco+Argento+Argento rosato
- Argento+Argento 2+oro
Insert: Mosaik - White+Silverfoil+Pinkish silverfoil
- Silverfoil+Silverfoil 2+Gold

(A) Tutti i Laccato lucido - All Glossy laquered — **€ 6.009,30**

(B) Inserti: Mosaik - Bianco+Argento+Argento rosato
- Argento+Argento 2+oro
Insert: Mosaik - White+Silverfoil+Pinkish silverfoil
- Silverfoil+Silverfoil 2+Gold

- stecche in legno L.-Standard - da cm.160 (set 6 pezzi) - wooden Pool cue L.-Standard - cm. 160 (set 6 pieces) — **€ 2.428,80**
- Set biglie Ø 52,4 mm. Snooker inglese - Ø 57mm. per Pool americano - Ø 68 mm per Piramide russa — **€ 607,20**
  Set balls Ø 52,4 mm. english Snooker - Ø 57mm. American Pool - Ø 68 mm Russian Piramid

PLAY ROOM - POOL TABLE 8-9 FEET - MOSAIK

8 piedi dimensioni campo gioco cm. 224 x 112 - Dimensioni esterne cm. 260 x 148 - Russo H. 80; Snooker inglese H. 80; Americano H. 78
8 Feet playng fiel dimention cm. 224 x 112 - External dimention cm. 260 x 148 - Russian H. 80; English Snooker H. 80; American H. 78
Con piano in ardesia 25 mm - With playground stone slate 25 mm

9 piedi dimensioni campo gioco cm. 254 x 112 - Dimensioni esterne cm. 290 x 163 - Russo H. 80; Snooker inglese H. 80; Americano H. 78
9 Feet playng fiel dimention cm. 254 x 127 - External dimention cm. 290 x 163 - Russian H. 80; English Snooker H. 80; American H. 78
Con piano in ardesia 25 mm - With playground stone slate 25 mm

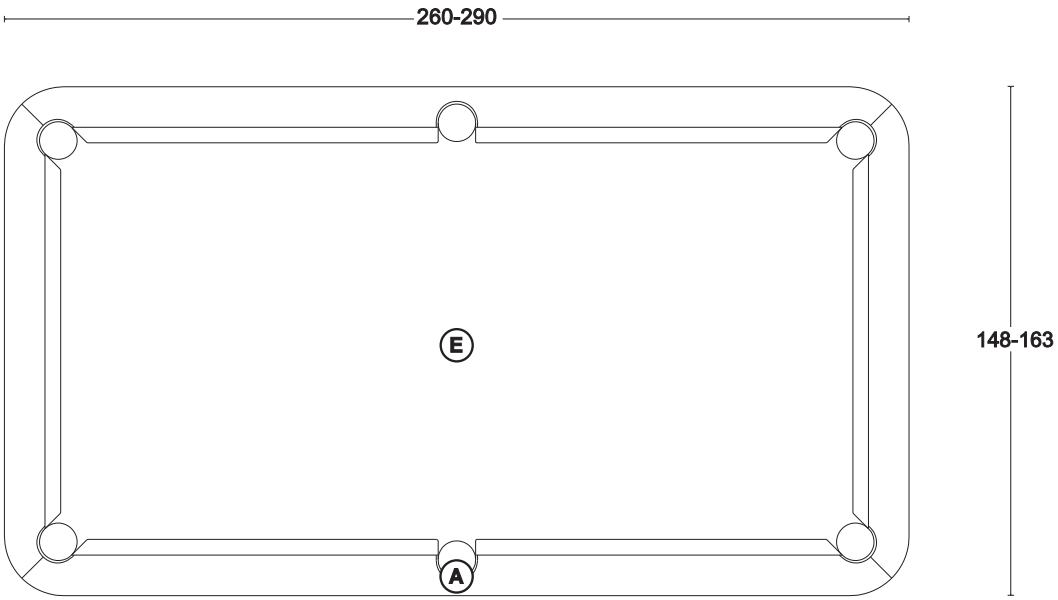

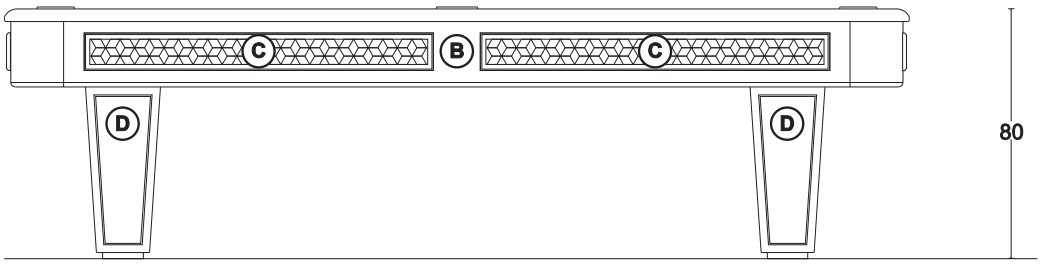

A+B+D Tutti i Laccato opaco / All Opaque laquered — D Decorazioni: Oro/Argento foglia / D Decoration: Gold/Silver foil

C Inserti: Mosaik - Bianco+Argento+Argento rosato - Argento+Argento 2+oro
Insert: Mosaik - White+Silverfoil+Pinkish silverfoil - Silverfoil+Silverfoil 2+Gold

E Tappeto biliardo colori diversi - Pool table cloth different colours

8 PIEDI-8 FEET € 44.148,50
9 PIEDI-9 FEET € 44.148,50

A+B+D Tutti i Laccato lucido / All Glossy laquered — D Decorazioni: Oro/Argento foglia / D Decoration: Gold/Silver foil

C Inserti: Mosaik - Bianco+Argento+Argento rosato - Argento+Argento 2+oro
Insert: Mosaik - White+Silverfoil+Pinkish silverfoil - Silverfoil+Silverfoil 2+Gold

E Tappeto biliardo colori diversi - Pool table cloth different colours

8 PIEDI-8 FEET € 45.160,50
9 PIEDI-9 FEET € 45.160,50

PLAY ROOM - POOL LAMP 8-9 FEET - MOSAIK

Lampada a LED per biliardo da 8-9 piedi - 130 Watt - peso kg. 70
LED Lamp for Pool 8-9 Feet - 130 Watt - Weight Kg. 70

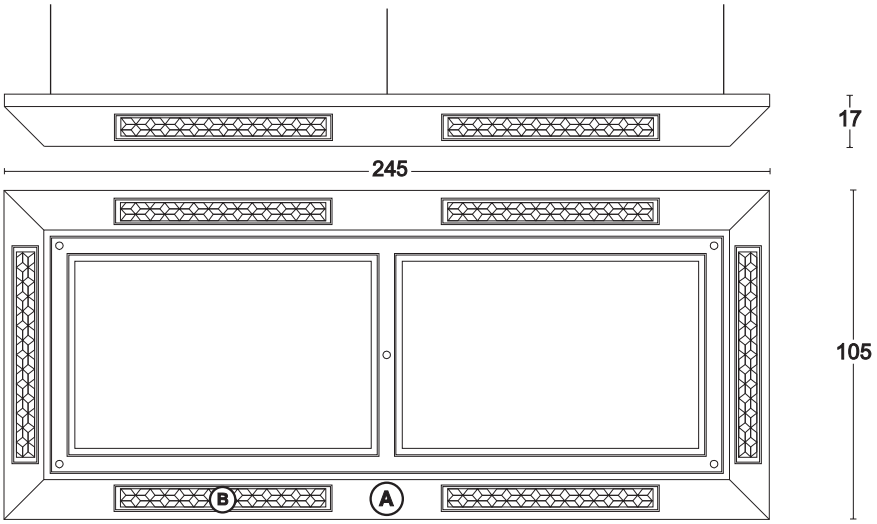

(A) Tutti i Laccato opaco - Decorazioni: anche in Oro/Argento foglia — **€ 11.258,50**
All Opaque laquered - Decoration: Also Gold/Silver foil

(B) Inserti: Mosaik - Bianco+Argento+Argento rosato - Argento+Argento 2+oro
Insert: Mosaik - White+Silverfoil+Pinkish silverfoil - Silverfoil+Silverfoil 2+Gold

(A) Tutti i Laccato lucido - Decorazioni: anche in Oro/Argento foglia — **€ 12.017,50**
All Glossy laquered - Decoration: Also in Gold/Silver foil

(B) Inserti: Mosaik - Bianco+Argento+Argento rosato - Argento+Argento 2+oro
Insert: Mosaik - White+Silverfoil+Pinkish silverfoil - Silverfoil+Silverfoil 2+Gold

CUE RACK-BODY-A - MOSAIK

Porta stecche per biliardo da 8-9 piedi con orologio al quarzo
Pool Cue Rack for 8-9 Feet with quarz clock

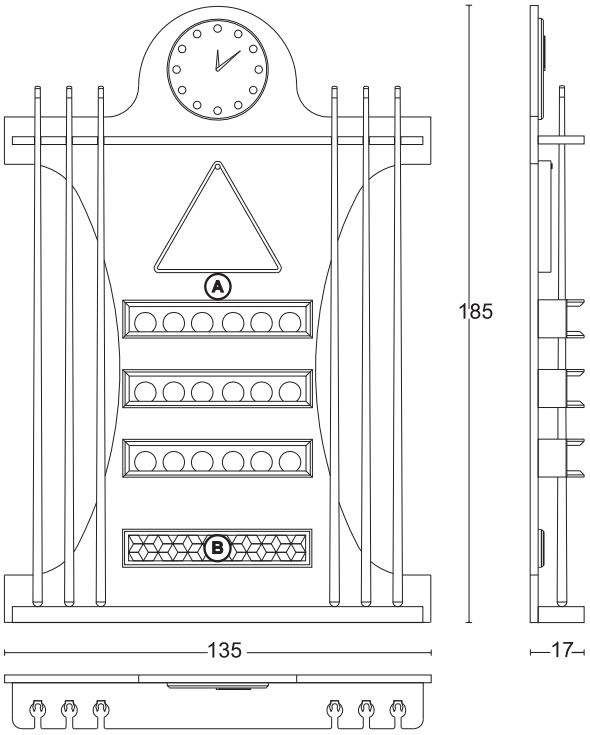

(A) Tutti i Laccato opaco - All Opaque laquered — **€ 5.250,30**

(B) Inserti: Mosaik - Bianco+Argento+Argento rosato
- Argento+Argento 2+oro
Insert: Mosaik - White+Silverfoil+Pinkish silverfoil
- Silverfoil+Silverfoil 2+Gold

(A) Tutti i Laccato lucido - All Glossy laquered — **€ 6.009,30**

(B) Inserti: Mosaik - Bianco+Argento+Argento rosato
- Argento+Argento 2+oro
Insert: Mosaik - White+Silverfoil+Pinkish silverfoil
- Silverfoil+Silverfoil 2+Gold

- stecche in legno L.-Standard - da cm.145 (set 6 pezzi) - wooden Pool cue L.-Standard - cm. 145 (set 6 pieces) — **€ 1.821,60**
- Set biglie Ø 52,4 mm. Snooker inglese - Ø 57mm. per Pool americano - Ø 68 mm per Piramide russa — **€ 607,20**
  Set balls Ø 52,4 mm. english Snooker - Ø 57mm. American Pool - Ø 68 mm Russian Piramid

BAROQUE 34 > 71

VISMARADESIGN®

TV - LIFT & FIRE - 158 - BAROQUE

Struttura per Home Cinema - a parete (con salita TV motorizzata computerizzata e telecomandata - completo di Bio-Camino ecologico)
Home Cinema - Wall Rack (motorized, computerized and remote-controlled TV lift system - provided with ecological bio-fireplace)

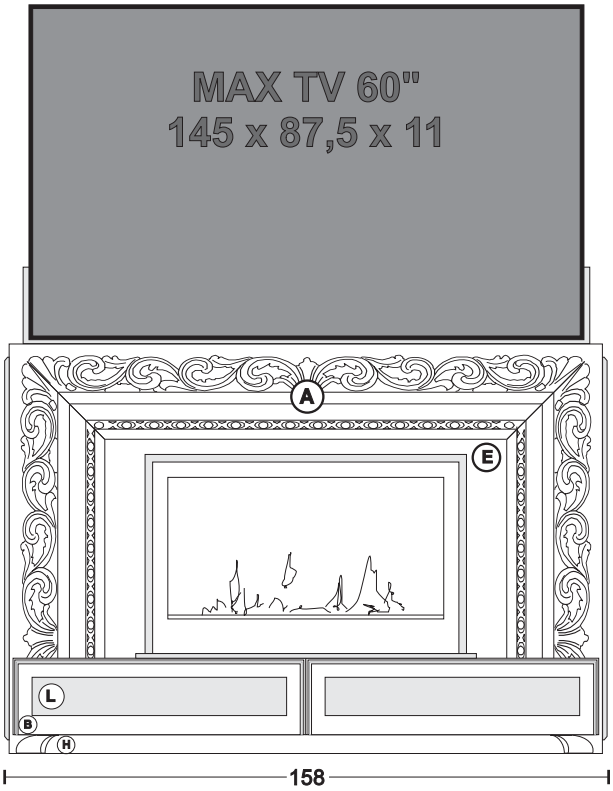

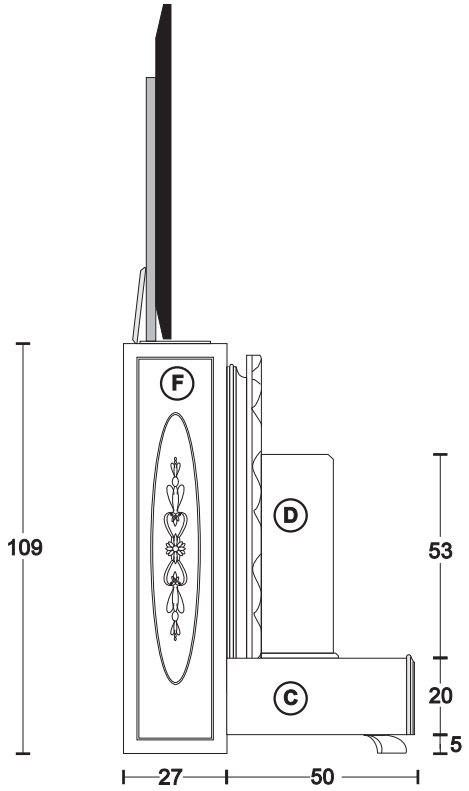

Finiture e combinazioni - Finishings and combinations

A	Oro/Argento foglia (Gold/Silver foil)	B+C+D+E+F	Tutti i laccati opachi - decorazioni argento/oro foglia (all opaque laquering - silver/gold foil decorations)	
H	Argento/Oro foglia (Silver/Gold foil)	L	Vetri:Bianco/Fume (glass white or fume)	€ 19.910,00
A+F+B	Nero e Bianco Lucido (gloss White and Black)	C+D+E	Bianco opaco - decorazioni Nero (opaque white- Black decorations)	
H	Argento/Oro foglia (Silver/Gold foil)	L	Vetri:Bianco/Fume (glass white or fume)	€ 20.290,60
A	Argento foglia+patina bianca (Silver foil+white patina)	B+C+D+E+F	Bianco opaco - decorazioni argento foglia+patina bianca (opaque white - silver foil decorations+White Patina)	
H	Argento foglia+patina bianca (Silver foil+white patina)	L	Vetri:Bianco/Fume (glass white or fume)	€ 20.102,50
A	Oro foglia+patina avorio (Gold foil+Ivory patina)	B+C+D+E+F	Avorio opaco - decorazioni oro foglia+patina avorio (opaque Ivory - silver foil decorations+Ivory Patina)	
H	Oro foglia+patina avorio (Gold foil+Ivory patina)	L	Vetri:Bianco/Fume (glass white or fume)	€ 20.102,50
A+F+B	Cracklè avorio+decorazioni argento/oro foglia (Ivory Crackle+silver/gold foil decoration)	C+D+E	Avorio opaco - decorazioni argento/oro foglia (opaque Ivory - silver/gold foil decorations)	
H	Argento/Oro foglia (Silver/Gold foil)	L	Vetri:Bianco/Fume (glass white or fume)	€ 20.229,00

TV - LIFT & BAR - 158 - BAROQUE

Struttura per Home Cinema - a parete (con salita TV motorizzata computerizzata e telecomandata - completo di Mobile a 3 ante push)
Home Cinema - Wall Rack (with motorized, computerized and remote-controlled TV lift system - provided with a 3 push-doors cabinet)

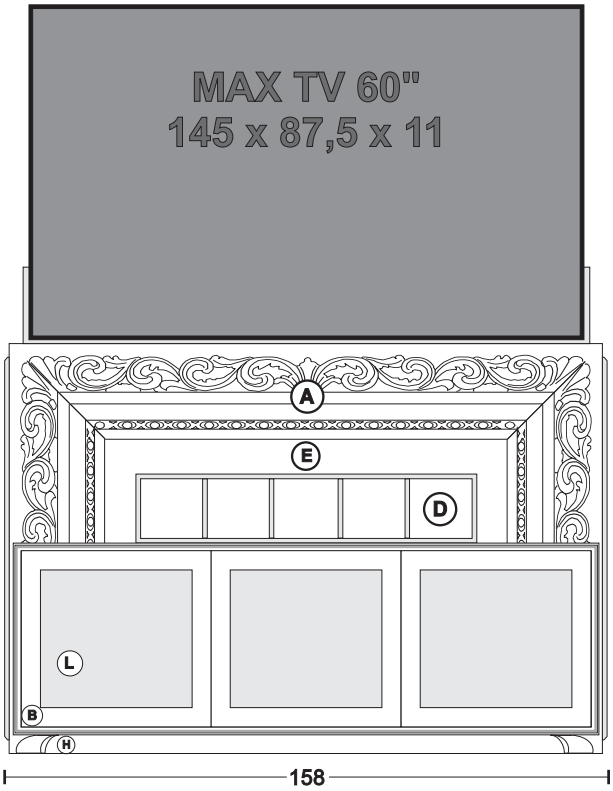

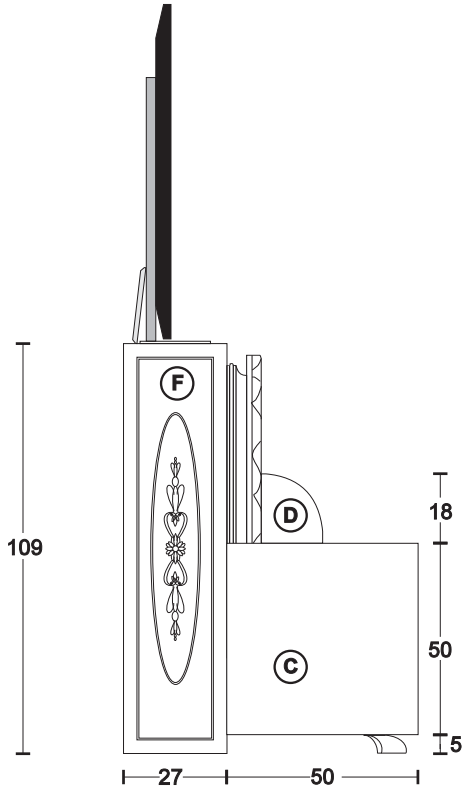

Finiture e combinazioni - Finishings and combinations

A	Oro/Argento foglia (Gold/Silver foil)	B+C+D+E+F	Tutti i laccati opachi - decorazioni argento/oro foglia (all opaque laquering - silver/gold foil decorations)	
H	Argento/Oro foglia (Silver/Gold foil)	L	Vetri:Bianco/Fume (glass white or fume)	€ 18.038,90
A+F+B	Nero e Bianco Lucido (gloss White and Black)	C+D+E	Bianco opaco - decorazioni Nero (opaque white- Black decorations)	
H	Argento/Oro foglia (Silver/Gold foil)	L	Vetri:Bianco/Fume (glass white or fume)	€ 18.418,40
A	Argento foglia+patina bianca (Silver foil+white patina)	B+C+D+E+F	Bianco opaco - decorazioni argento foglia+patina bianca (opaque white - silver foil decorations+White Patina)	
H	Argento foglia+patina bianca (Silver foil+white patina)	L	Vetri:Bianco/Fume (glass white or fume)	€ 18.266,60
A	Oro foglia+patina avorio (Gold foil+Ivory patina)	B+C+D+E+F	Avorio opaco - decorazioni oro foglia+patina avorio (opaque Ivory - gold foil decorations+Ivory Patina)	
H	Oro foglia+patina avorio (Gold foil+Ivory patina)	L	Vetri:Bianco/Fume (glass white or fume)	€ 18.266,60
A+F+B	Cracklè avorio+decorazioni argento/oro foglia (Ivory Cracklè+silver/gold foil decoration)	C+D+E	Avorio opaco - decorazioni argento/oro foglia (opaque Ivory - silver/gold foil decorations)	
H	Argento/Oro foglia (Silver/Gold foil)	L	Vetri:Bianco/Fume (glass white or fume)	€ 18.393,10

TV - LIFT & FIRE - 182 - BAROQUE

Struttura per Home Cinema - a parete (con salita TV motorizzata computerizzata e telecomandata - completo di Bio-Camino ecologico)
Home Cinema - Wall Rack (motorized, computerized and remote-controlled TV lift system - provided with ecological bio-fireplace)

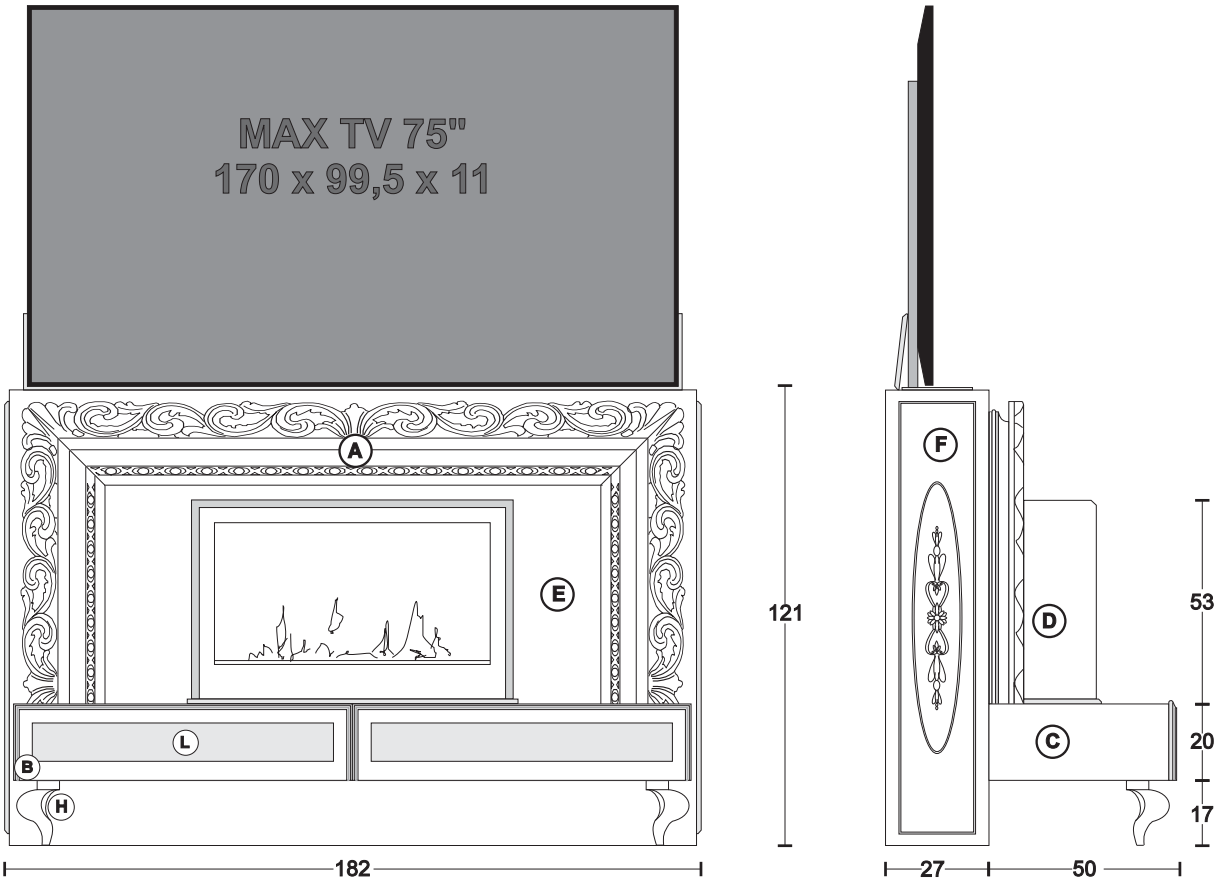

Finiture e combinazioni - Finishings and combinations

A	Oro/Argento foglia (Gold/Silver foil)	B+C+D+E+F	Tutti i laccati opachi - decorazioni argento/oro foglia (all opaque laquering - silver/gold foil decorations)	
H	Argento/Oro foglia (Silver/Gold foil)	L	Vetri:Bianco/Fume (glass white or fume)	€ 20.306,00
A+F+B	Nero e Bianco Lucido (gloss White and Black)	C+D+E	Bianco opaco - decorazioni Nero (opaque white- Black decorations)	
H	Argento/Oro foglia (Silver/Gold foil)	L	Vetri:Bianco/Fume (glass white or fume)	€ 20.680,00
A	Argento foglia+patina bianca (Silver foil+white patina)	B+C+D+E+F	Bianco opaco - decorazioni argento foglia+patina bianca (opaque white - silver foil decorations+White Patina)	
H	Argento foglia+patina bianca (Silver foil+white patina)	L	Vetri:Bianco/Fume (glass white or fume)	€ 20.518,30
A	Oro foglia+patina avorio (Gold foil+Ivory patina)	B+C+D+E+F	Avorio opaco - decorazioni oro foglia+patina avorio (opaque Ivory - gold foil decorations+Ivory Patina)	
H	Oro foglia+patina avorio (Gold foil+Ivory patina)	L	Vetri:Bianco/Fume (glass white or fume)	€ 20.518,30
A+F+B	Crackè avorio+decorazioni argento/oro foglia (Ivory Cracklè+silver/gold foil decorations)	C+D+E	Avorio opaco - decorazioni argento/oro foglia (opaque Ivory - silver/gold foil decorations)	
H	Argento/Oro foglia (Silver/Gold foil)	L	Vetri:Bianco/Fume (glass white or fume)	€ 20.682,20

TV - LIFT & BAR - 182 - BAROQUE

Struttura per Home Cinema - a parete (con salita TV motorizzata computerizzata e telecomandata - completo di Mobile a 4 ante push)
Home Cinema - Wall Rack (with motorized, computerized and remote-controlled TV lift system - provided with a 4 push-doors cabinet)

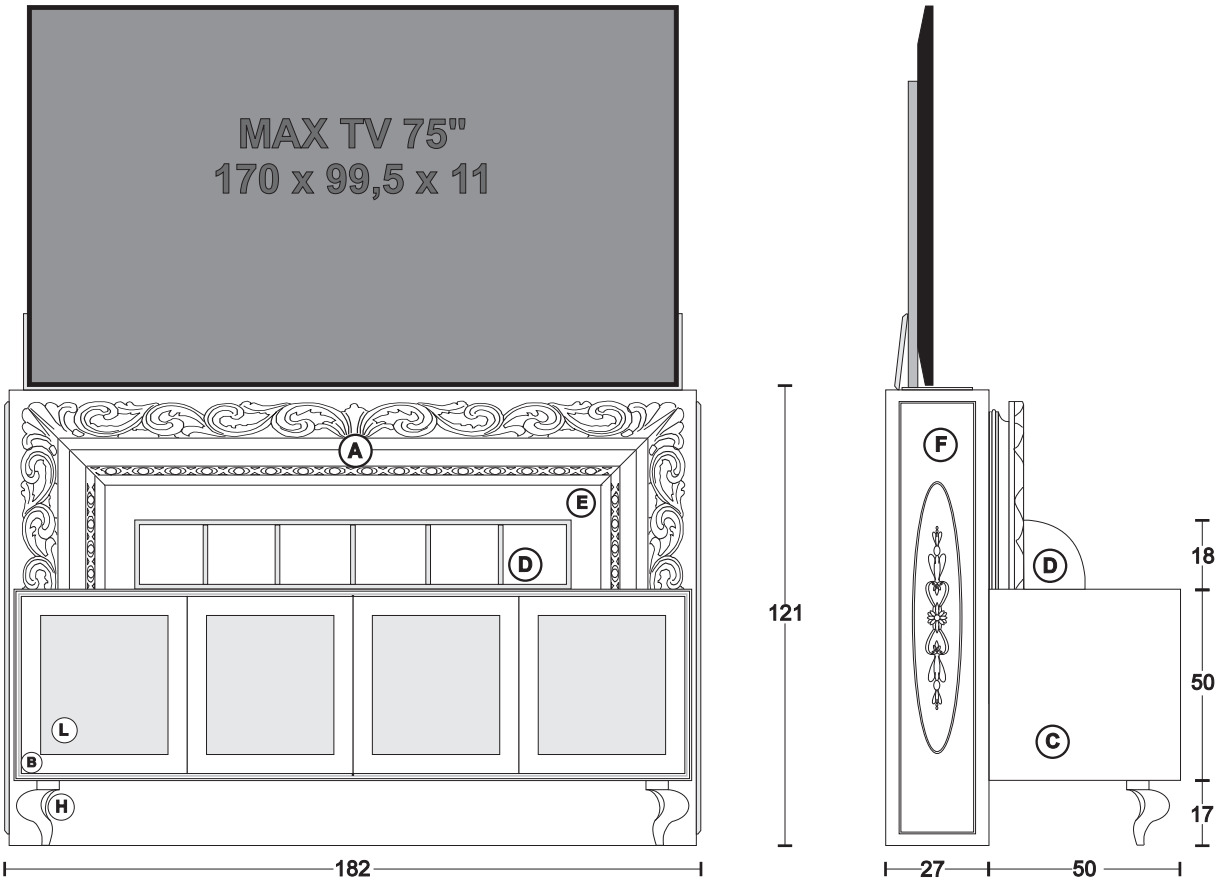

Finiture e combinazioni - Finishings and combinations

A	Oro/Argento foglia (Gold/Silver foil)	B+C+D+E+F	Tutti i laccati opachi - decorazioni argento/oro foglia (all opaque laquering - silver/gold foil decorations)	
H	Argento/Oro foglia (Silver/Gold foil)	L	Vetri:Bianco/Fume (glass white or fume)	€ 18.532,80
A+F+B	Nero e Bianco Lucido (gloss White and Black)	C+D+E	Bianco opaco - decorazioni Nero (opaque white- Black decorations)	
H	Argento/Oro foglia (Silver/Gold foil)	L	Vetri:Bianco/Fume (glass white or fume)	€ 18.911,20
A	Argento foglia+patina bianca (Silver foil+white patina)	B+C+D+E+F	Bianco opaco - decorazioni argento foglia+patina bianca (opaque white - silver foil decorations+White Patina)	
H	Argento foglia+patina bianca (Silver foil+white patina)	L	Vetri:Bianco/Fume (glass white or fume)	€ 18.696,70
A	Oro foglia+patina avorio (Gold foil+Ivory patina)	B+C+D+E+F	Avorio opaco - decorazioni oro foglia+patina avorio (opaque Ivory - gold foil decorations+Ivory Patina)	
H	Oro foglia+patina avorio (Gold foil+Ivory patina)	L	Vetri:Bianco/Fume (glass white or fume)	€ 18.696,70
A+F+B	Cracklè avorio+decorazioni argento/oro foglia (Ivory Cracklè+silver/gold foil decorations)	C+D+E	Avorio opaco - decorazioni argento/oro foglia (opaque Ivory - silver/gold foil decorations)	
H	Argento/Oro foglia (Silver/Gold foil)	L	Vetri:Bianco/Fume (glass white or fume)	€ 18.899,10

SLIDING HOME CINEMA - BAROQUE

Struttura per Home Cinema - a parete con apertura motorizzata, computerizzata e telecomandata - luci led laterali
Home Cinema - Wall Rack - Motorized and computerized opening, with remote control - LED lights on sides

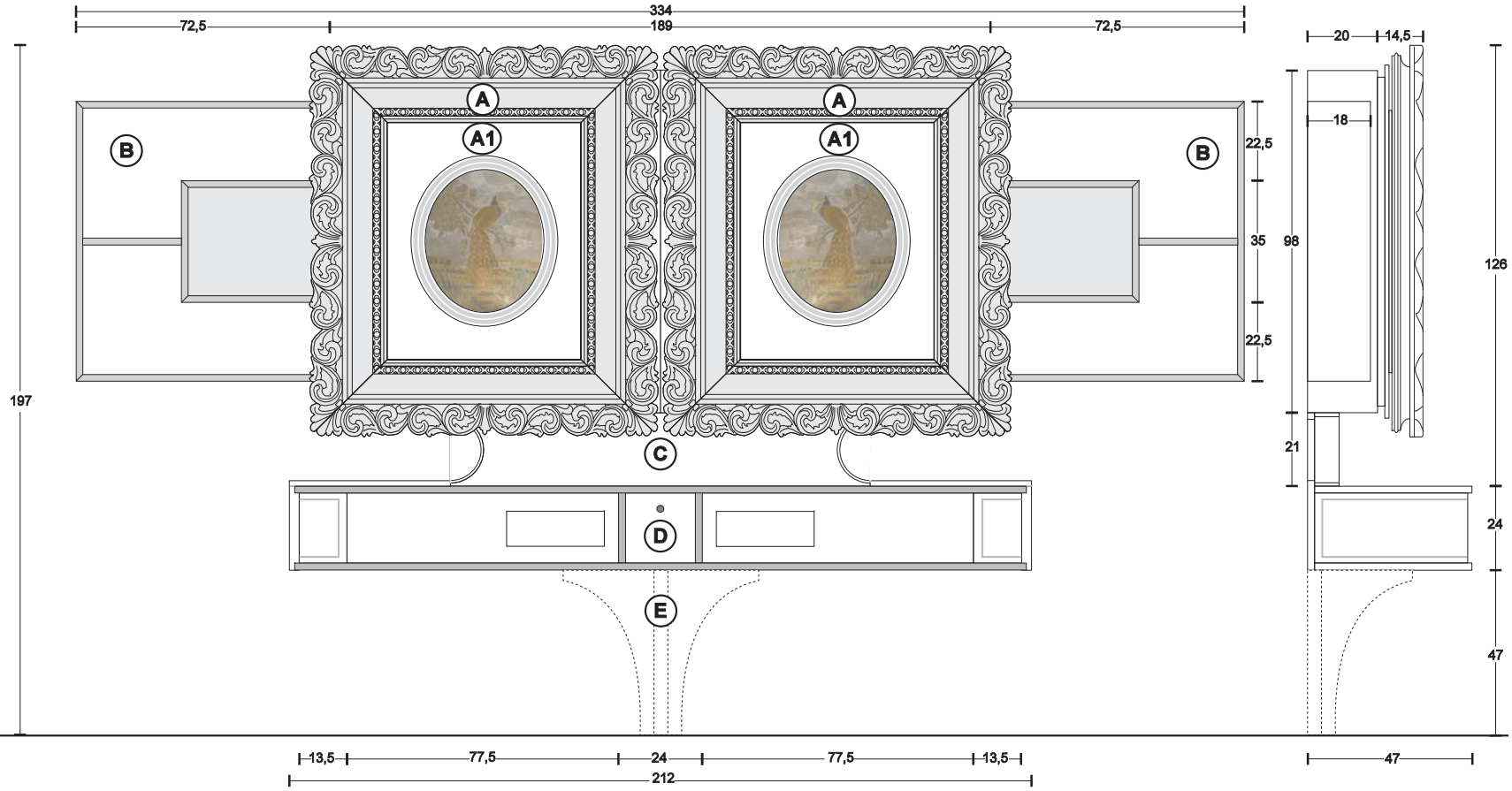

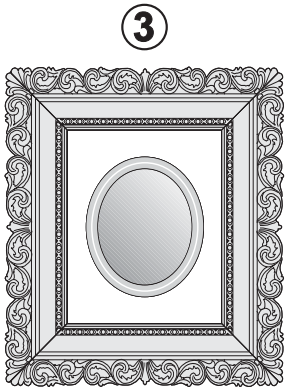

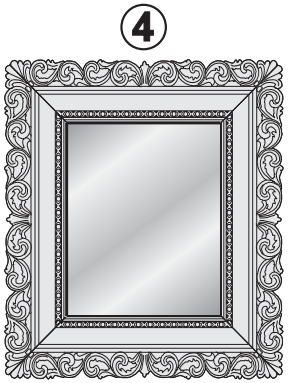

SLIDING HOME CINEMA - BAROQUE

Struttura per Home Cinema - a parete con apertura motorizzata, computerizzata e telecomandata - luci led laterali
Home Cinema - Wall Rack - Motorized and computerized opening, with remote control - LED lights on sides

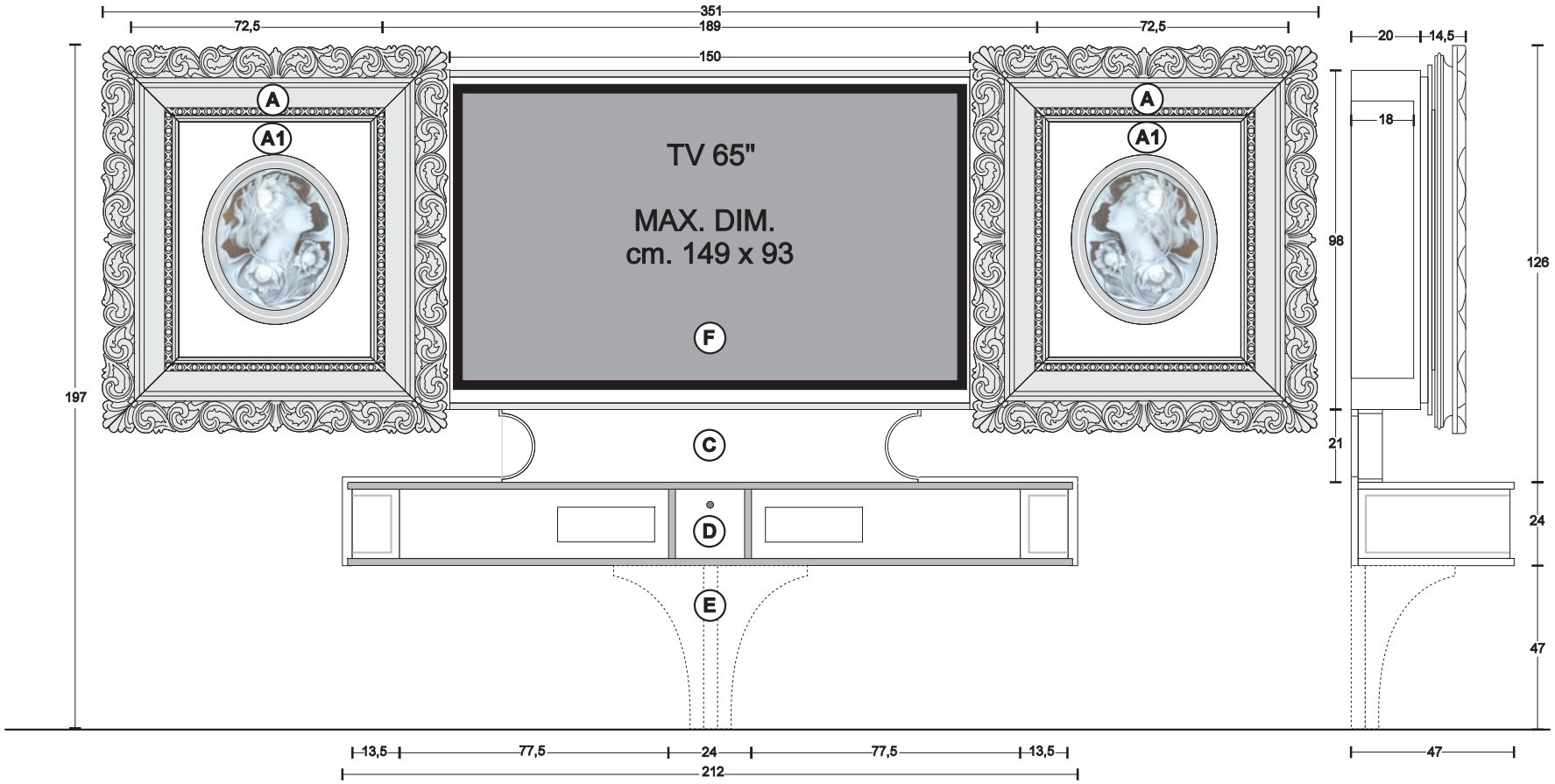

Ⓐ Oro/Argento Foglia+tutti laccati opachi
Gold/Silver foil+all opaque laquering

Ⓐ1 + Ⓒ + Ⓔ + Ⓕ Tutti i laccati opachi
all opaque laquering

Ⓑ Tutti i laccati opachi-Decorazioni Oro/Argento
all opaque laquering-decoration gold/silver foil

Ⓓ Top Oro/Argento Foglia-parti rimanenti tutti i laccati opachi
Top gold/silver foil-remaining parts all opaque laquering

Con-with ① **EURO 27.159,00** Con-with ② **EURO 30.727,40** Con-with ③ **EURO 26.742,10** Con-with ④ **EURO 26.767,40** Con-with ⑤ **EURO 27.387,80**

Ⓐ Nero/Bianco Lucido-Decori Oro/ argento
Gloss Black/White-Gold/Silver Foil Decorations

Ⓐ1 + Ⓒ + Ⓔ + Ⓕ Bianco/Nero opaco
opaque White/Black

Ⓑ Bianco/nero opaco-Decorazioni Oro/Argento foglia
opaque White/Black-decoration Gold/Silverfoil

Ⓓ Top Argento Foglia-parti rimanenti Bianco/nero opaco
Top silver foil-remaining parts opaque White/Black laquering

Con-with ① **EURO 27.754,10** Con-with ② **EURO 21.321,40** Con-with ③ **EURO 27.337,20** Con-with ④ **EURO 27.362,50** Con-with ⑤ **EURO 27.981,80**

Ⓐ Cracklè avorio+decorazioni argento/oro f
Ivory Cracklè+silver/gold foil decoration

Ⓐ1 + Ⓒ + Ⓔ + Ⓕ Laccato avorio opaco
Ivory opaque laquering

Ⓑ Laccato avorio opaco+decorazioni argento/oro foglia
Ivory opaque laquering+silver/gold foil decoration

Ⓓ Cracklè avorio+decorazioni argento/oro foglia
Ivory cracklè+silver/gold foil decoration

Con-with ① **EURO 27.438,40** Con-with ② **EURO 31.005,70** Con-with ③ **EURO 27.020,40** Con-with ④ **EURO 27.045,70** Con-with ⑤ **EURO 27.665,00**

REVOLVING HOME CINEMA - BAROQUE

Struttura per Home Cinema - centro stanza con rotazione TV motorizzata, computerizzata e telecomandata
Home Cinema - Standing rack - Motorized and computerized revolving TV , with remote control

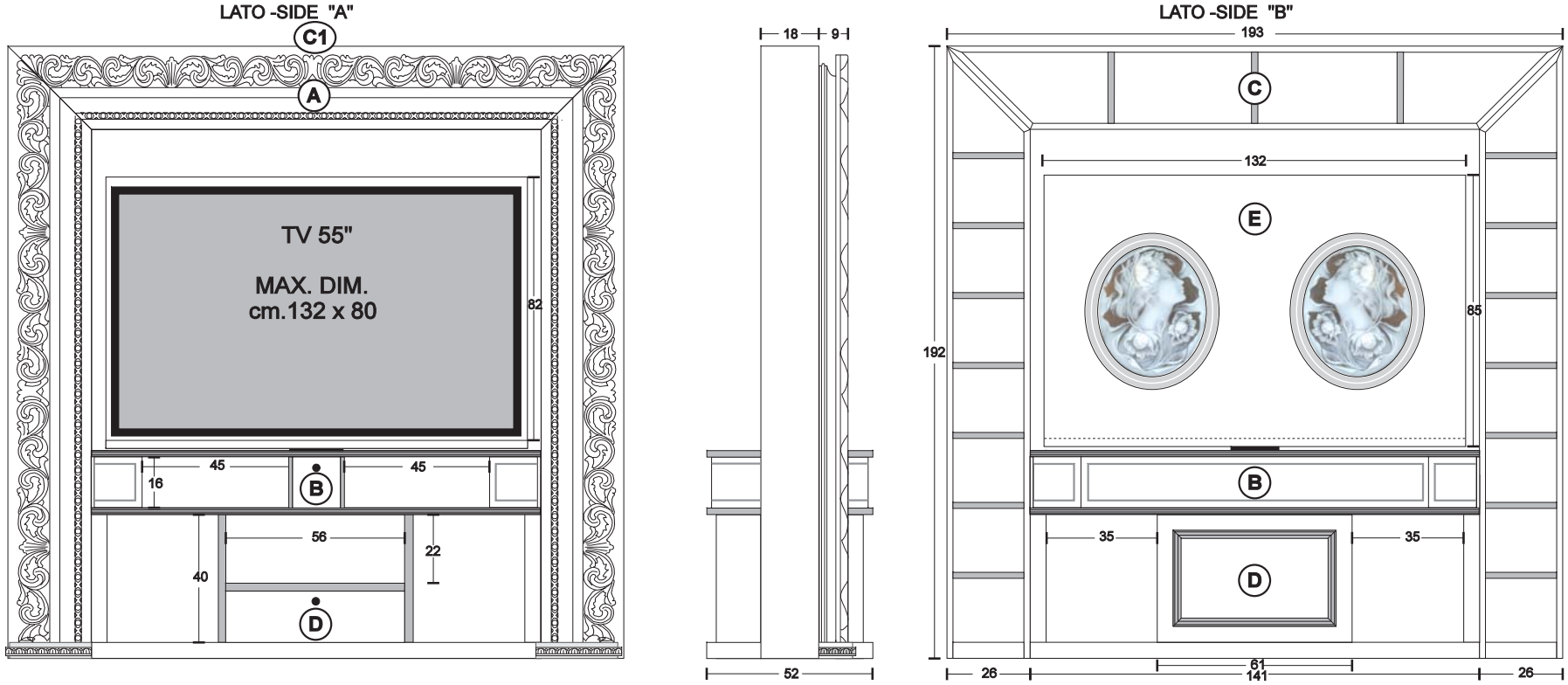

REVOLVING HOME CINEMA - BAROQUE

Struttura per Home Cinema - centro stanza con rotazione TV motorizzata, computerizzata e telecomandata
Home Cinema - Standing rack - Motorized and computerized revolving TV , with remote control

DECORAZIONE PANNELLO LATO "B" -DECORATION PANEL SIDE "B"

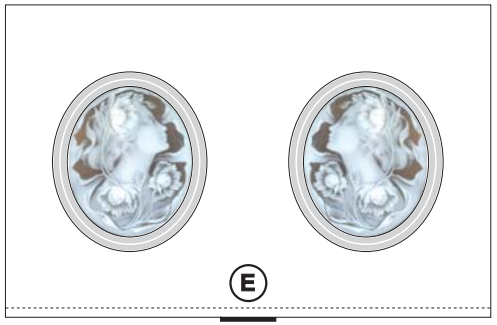

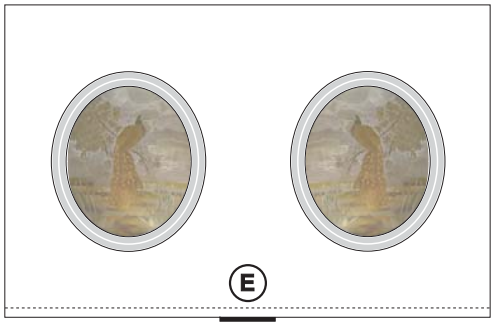

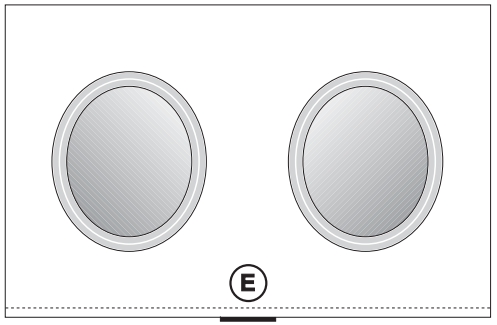

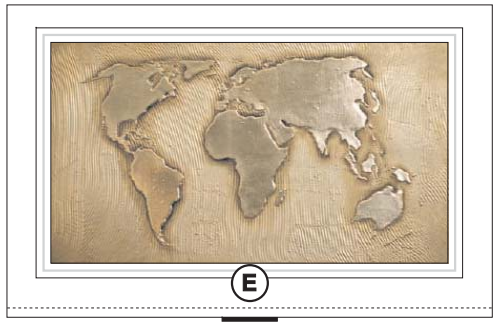

1 ovale con Cammeo
Oval with Cameo

2 Ovale con Pavone Artistico oro 23/22/20/18/16/12 Carati
Oval with Artistic peacock Gold 23/22/20/18/16/12 carats

3 Ovale con specchio bisellato
Oval with bevelled mirror

4 "Il Mondo" decorazione in rilievo in foglia platino
"The world" decoration in relief - platinum foil

A Oro/Argento Foglia+nero/crema/bianco
Gold/Silver foil+black/cream/white

C1+**C**+**E**+**D** Tutti i laccati opachi-Decorazioni Oro/Argento
all opaque laquering-decoration gold/silver foil

B Oro/Argento Foglia/tutti i laccati opachi
Gold/silver foil all opaque laquering

Con-with **1** EURO 18.569,10 | Con-with **2** EURO 22.181,50 | Con-with **3** EURO 18.144,50 | Con-with **4** EURO 19.684,50

A Nero/Bianco Lucido-Decorazioni argent
Gloss Black/White-Silver Foil Decorations

C1+**C**+**E**+**D** Bianco/Nero opaco-Decorazioni Argento
opaque White/Black-decoration silver foil

B Argento Foglia-Bianco /nero lucido
Silver foil-gloss white/black

Con-with **1** EURO 19.100,40 | Con-with **2** EURO 22.712,80 | Con-with **3** EURO 18.674,70 | Con-with **4** EURO 20.215,80

A Cracklè avorio+decorazioni argento/oro foglia
Ivory cracklè+silver/gold foil decoration

C1+**C**+**E**+**D** Laccato avorio opaco+decorazioni argento/oro foglia
Ivory opaque laquering+silver/gold foil decoration

B Cracklè avorio+decorazioni argento/oro foglia
Ivory cracklè+silver/gold foil decoration

Con-with **1** EURO 18.758,30 | Con-with **2** EURO 22.371,80 | Con-with **3** EURO 18.333,70 | Con-with **4** EURO 19.874,80

A Oro/argento patinato avorio/bianco+decoraz oro/arg
Gold/silver foil+ivory/white patina+gold/silver decorations

C1+**C**+**E**+**D** Laccato avorio/bianco opaco+decorazioni argento/oro foglia
Ivory/white opaque laquering+silver/gold foil decoration

B Oro/argento patinato avorio/bianco+decoraz oro/arg
Gold/silver foil+ivory/white patina+gold/silver decorations

Con-with **1** EURO 18.733,00 | Con-with **2** EURO 22.346,50 | Con-with **3** EURO 18.308,40 | Con-with **4** EURO 19.849,50

THE WALL HOME CINEMA - BAROQUE

Struttura per Home Cinema - a parete
Home Cinema - Wall Rack

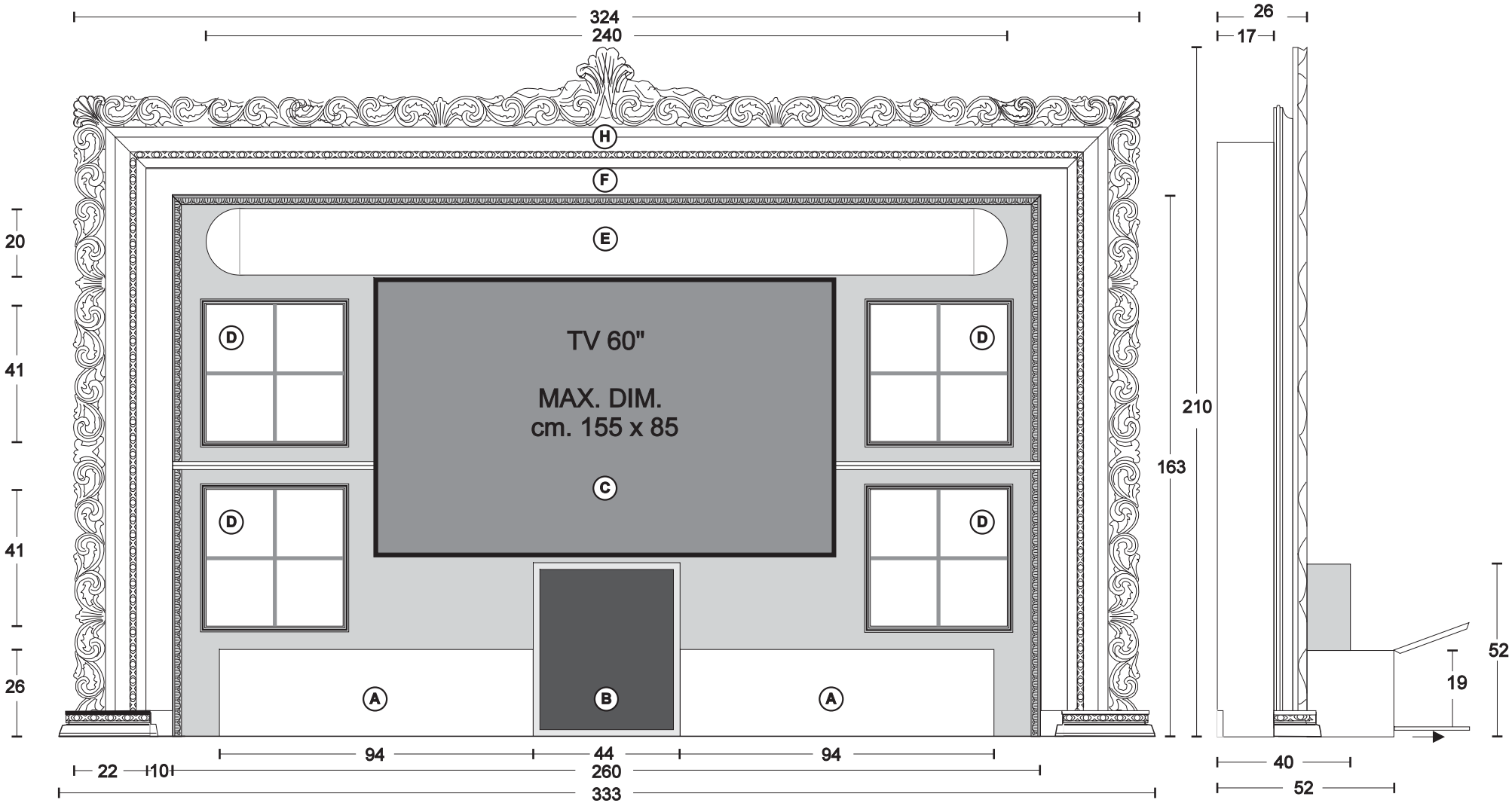

B+C	ORO/ARGENTO FOGLIA (gold/silver foil)	A+D+E+F	Tutti i laccati(all laquered)	H	ORO FOGLIA /ARGENTO FOGLIA(gold/silver foil)	€ 18.218,20
B+C	BIANCO - WHITE	A+D+E+F	METALSILVER	H	BIANCO - WHITE	€ 17.611,00
B+C	ARGENTO FOGLIA (silver foil)	A+D+E+F	BIANCO(white) NERO(black)	H	BIANCO/NERO lucido - gloss WHITE/BLACK (decorazioni argento foglia - silver foil decorations)	€ 18.772,60
H+C	CRACKLE' AVORIO-decoraz argento/oro (Ivory cracklè-silver/gold foil decoration)	A+D+E+F	AVORIO OPACO (Ivory opaque laquered)	B	ARGENTO/ORO FOGLIA (silver/gold foil)	€ 18.583,40

THE FRAME HOME CINEMA - BAROQUE

Struttura per Home Cinema - a parete (con luci retro-pannello diffuse)
Home Cinema - Wall Rack (with spreading back-panel lighting)

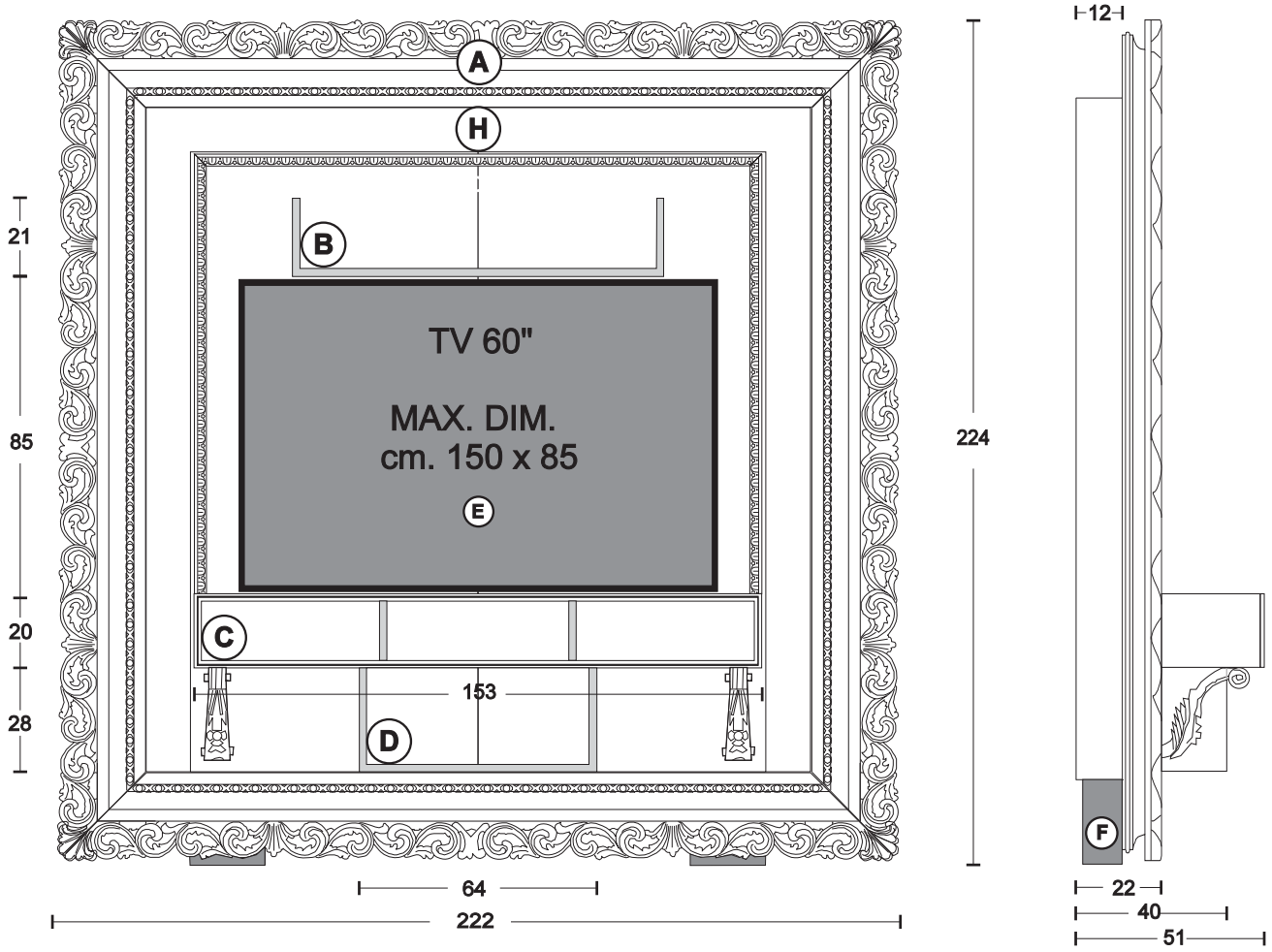

Finiture e combinazioni - Finishings and combinations

A+C	ORO/ARGENTO FOGLIA (gold(/silver foil)	B+D+E+F	TUTTI I LACCATI (all our laquered)	H	TUTTI I LACCATI (all our laquered)	€ 11.812,90
A+C	BIANCO OPACO (Opaque white) (decorazioni oro foglia - gold foli decorations)	B+D+E+F	BIANCO (White)	H	BIANCO (White)	€ 11.812,90
A+C	BIANCO OPACO (opaque white)	B+D+E+F	METALSILVER	H	METALSILVER	€ 11.493,90
A+C	NERO LUCIDO (gloss black) (decorazioni argento foglia - silver foil decorations)	B+D+E+F	NERO OPACO (Opaque black)	H	METALSILVER	€ 12.530,10
A+C	BIANCO LUCIDO (gloss white) (decorazioni argento foglia - silver foil decorations)	B+D+E+F	BIANCO OPACO (Opaque white)	H	METALSILVER	€ 12.530,10
A+C	ARGENTO PATINATO BIANCO (silver foil+white patina)	B+D+E+F	BIANCO OPACO Decorazioni argento foglia (Opaque white+Silver foil decoration)	H	METALSILVER	€ 11.941,60
A+C	ORO PATINATO AVORIO (gold foil+ivory patina)	B+D+E+F	AVORIO OPACO Decorazioni oro foglia (Opaque ivory+gold foil decoration)	H	METALGOLD	€ 11.941,60
A+C+E	CRACKLE' AVORIO(Ivory cracklè) (Decorazioni argento/oro foglia-silver/gold foil decoration)	B+D+F+H	LACCATO AVORIO OPACO (Ivory opaque laquered)			€ 12.167,10

THE FRAME CONTAINER-BAR - BAROQUE

Mobile con scaffali a giorno e ante scorrevoli - a parete (con led bianchi sotto piani orizzontali) ①②③④
Open wall-container, with sliding doors- Horizontal shelves enlightened by white LEDs ①②③④

-Sezione
-Section

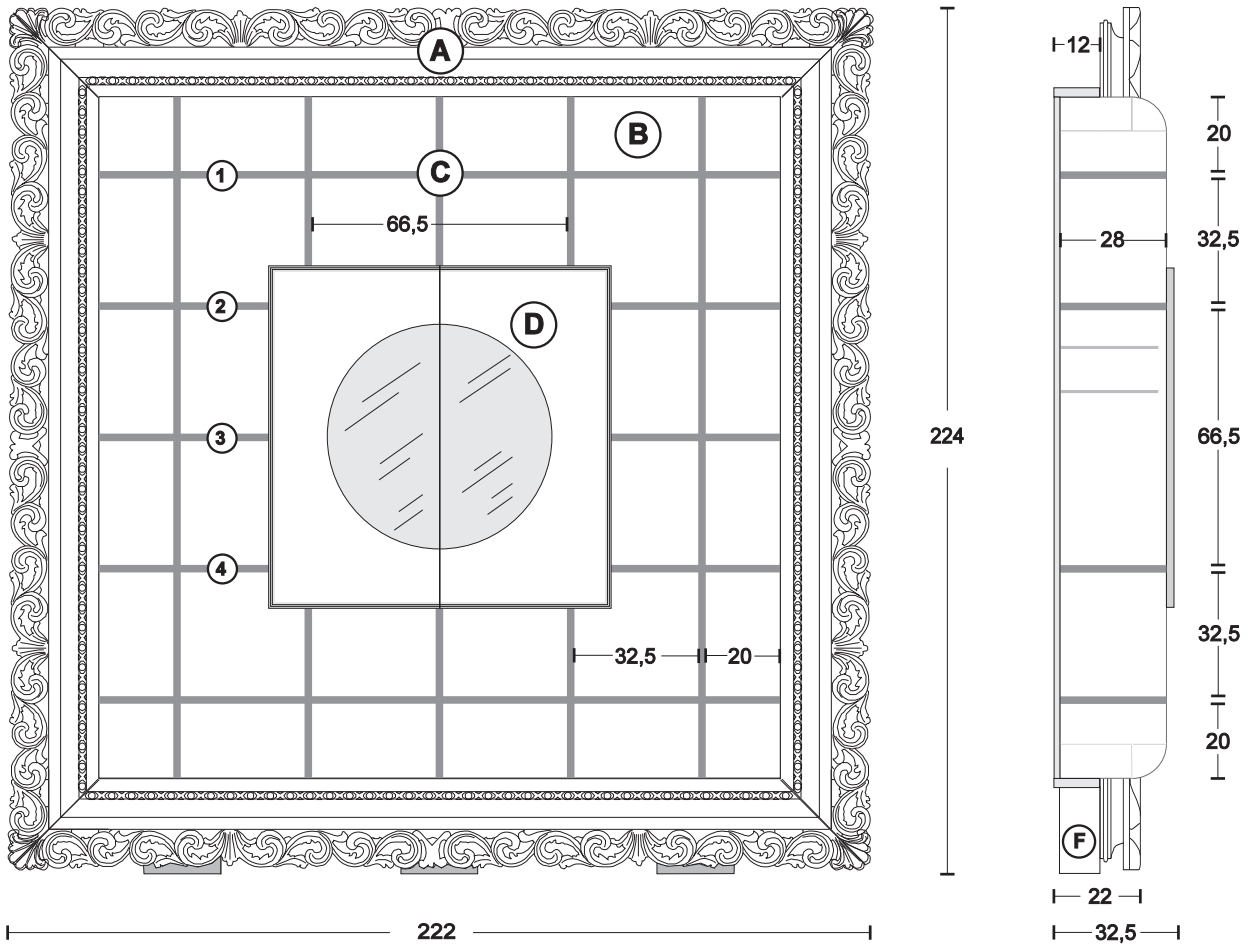

Finiture e combinazioni - Finishings and combinations

(A) ORO/ARGENTO FOGLIA (gold/silver foil)	(B) ORO/ARGENTO F (gold/silver foil)	(C)+(F) TUTTI I LACCATI (all our laquered)	(D) TUTTI I LACCATI (all our laquered)	€ 15.547,40
(A) BIANCO (white) (decorazioni oro foglia - gold foil decorations)	(B) ORO FOGLIA(gold foil)	(C)+(F) BIANCO (white)	(D) BIANCO (white)	€ 15.547,40
(A) BIANCO LUCIDO (gloss white) (decorazioni argento foglia - silver foil decorations)	(B) ARG. FOGLIA (silver foil)	(C)+(F) BIANCO (white)	(D) BIANCO LUCIDO (gloss-white)	€ 15.926,90
(A) NERO LUCIDO (gloss black) (decorazioni argento foglia - silver foil decorations)	(B) ARG. FOGLIA (silver foil)	(C)+(F) NERO (black)	(D) NERO LUCIDO (gloss black)	€ 15.926,90
(A) ARGENTO patinato bianco (silver foil+white patina)	(B) ARG. FOGLIA (silver foil)	(C)+(F) BIANCO OPACO (opaque white)	(D) BIANCO OPACO Decorazioni argento foglia (opaque white+silver foil decorations)	€ 15.673,90
(A) ORO patinato avorio (gold foil+ivory patina)	(B) ORO FOGLIA (gold foil)	(C)+(F) AVORIO OPACO (opaque ivory)	(D) AVORIO OPACO Decorazioni oro foglia (opaque ivory+gold foil decorations)	€ 15.673,90
(A)+(D) CRACKLE' AVORIO decorazioni argento/oro foglia (Ivory cracklè+silver/gold foil decorations)	(B) ORO/ARGENTO FOGLIA (gold/silver foil)	(C)+(F) LACCATO AVORIO (Ivory opaque laquering)		€ 15.787,20

THE FRAME "BIG MIRROR" - BAROQUE

Specchio a parete completo di consolle a 2 cassetti e vano a giorno - led bianchi perimetrali - bolle perimetrali su specchio
Wall-mirror with 2-drawer-consolle and open compartment- white leds on perimeter- bubbles on mirror border

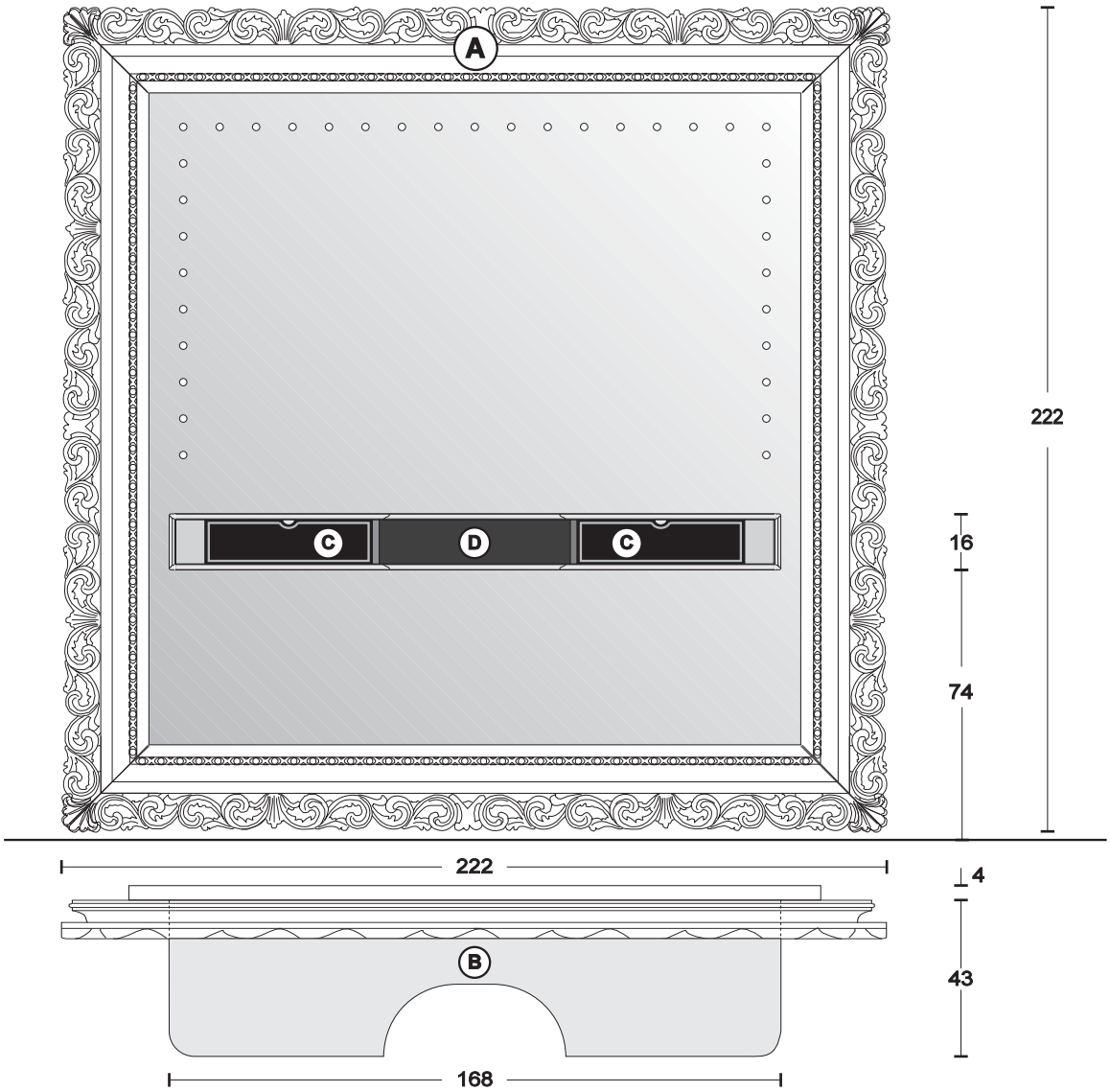

Finiture e combinazioni - Finishings and combinations

A ORO/ARGENTO FOGLIA (gold/silver foil)	B ORO/ARGENTO FOGLIA (gold/silver foil)	C TUTTI I LACCATI (all our laquering)	D TUTTI I LACCATI (all our laquering)	€ 13.321,00
A BIANCO (white) (decorazioni oro foglia - gold foil decorations)	B ORO FOGLIA(gold foil)	C BIANCO (white)	D BIANCO (white)	€ 13.321,00
A BIANCO LUCIDO(gloss white) (decorazioni argento foglia - silver foil decorations)	B ARG. FOGLIA(silver foil)	C BIANCO LUCIDO (gloss-white)	D BIANCO (white)	€ 13.624,60
A NERO LUCIDO(gloss black) (decorazioni argento foglia - silver foil decorations)	B ARG. FOGLIA(silver foil)	C NERO LUCIDO (gloss black)	D NERO (black)	€ 13.624,60
A + B ARGENTO FOGLIA patinato bianco (silver foil+white patina)		C BIANCO+decorazioni argento foglia (white+silver foil decoration)	D BIANCO (white)	€ 13.447,50
A + B ORO FOGLIA patinato avorio (gold foil+ivory patina)		C AVORIO+decorazioni oro foglia (ivory+gold foil decoration)	D AVORIO (ivory)	€ 13.447,50
A + B CRACKLE' AVORIO(Ivory cracklè) Decorazioni argento/oro foglia (Silver/gold foil decorations)		C ARGENTO/ORO foglia (Silver/gold foil)	D AVORIO (Ivory)	€ 13.574,00

STAR GATE - BAROQUE

Struttura per Home Cinema - a parete (con luci retro-pannello diffuse)
Home Cinema - Wall Rack (with spreading back-panel lighting)

-Sezione
-Section

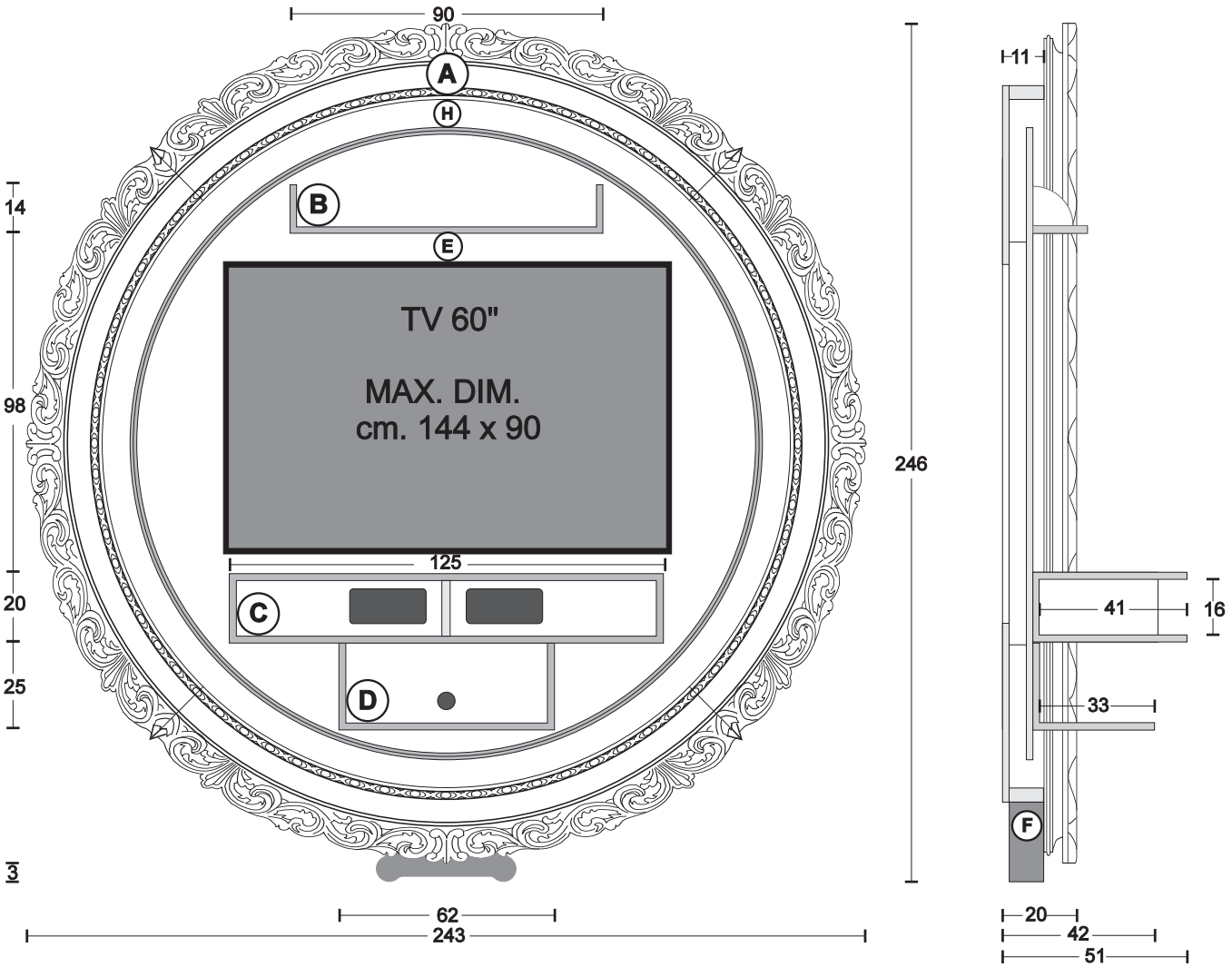

Finiture e combinazioni - Finishings and combinations

A+C	ORO/ARGENTO FOGLIA (gold/silver foil)	B+D+E+F	TUTTI I LACCATI (all our laquered)	H	TUTTI I LACCATI (all our laquered)	€ 15.446,20
A+C	BIANCO OPACO (Opaque white) (decorazioni oro foglia - gold foli decorations)	B+D+E+F	BIANCO OPACO (Opaque white)	H	BIANCO OPACO (Opaque white)	€ 15.170,10
A+C	NERO LUCIDO (gloss black) (decorazioni argento foglia - silver foil decorations)	B+D+E+F	NERO OPACO (Opaque black)	H	METALSILVER	€ 15.981,90
A+C	BIANCO LUCIDO (gloss white) (decorazioni argento foglia - silver foil decorations)	B+D+E+F	BIANCO OPACO (Opaque white)	H	METALSILVER	€ 15.981,90
A+C	ARGENTO foglia patinato bianco (silver foil+white patina)	B+D+E+F	BIANCO OPACO decorazioni argento foglia (Opaque white+silver foil decoration)	H	METALSILVER	€ 15.572,70
A+C	ORO foglia patinato avorio (gold foil+ivory patina)	B+D+E+F	AVORIO OPACO decorazioni oro foglia (Opaque ivory+goldr foil decoration)	H	METALGOLD	€ 15.572,70
A+C+E	CRACKLE' AVORIO decorazioni argento/oro foglia (Ivory cracklè+silver/gold foil decorations)	B+D+F+H	LACCATO AVORIO OPACO (Ivory opaque laquering)			€ 15.799,30

STAR GATE CONTAINER-BAR - BAROQUE

Mobile con scaffali a giorno e ante scorrevoli - a parete (con led bianchi sotto piani orizzontali) ①②③④
Open wall-container, with sliding doors- Horizontal shelves enlightened by white LEDs ①②③④

-Sezione
-Section

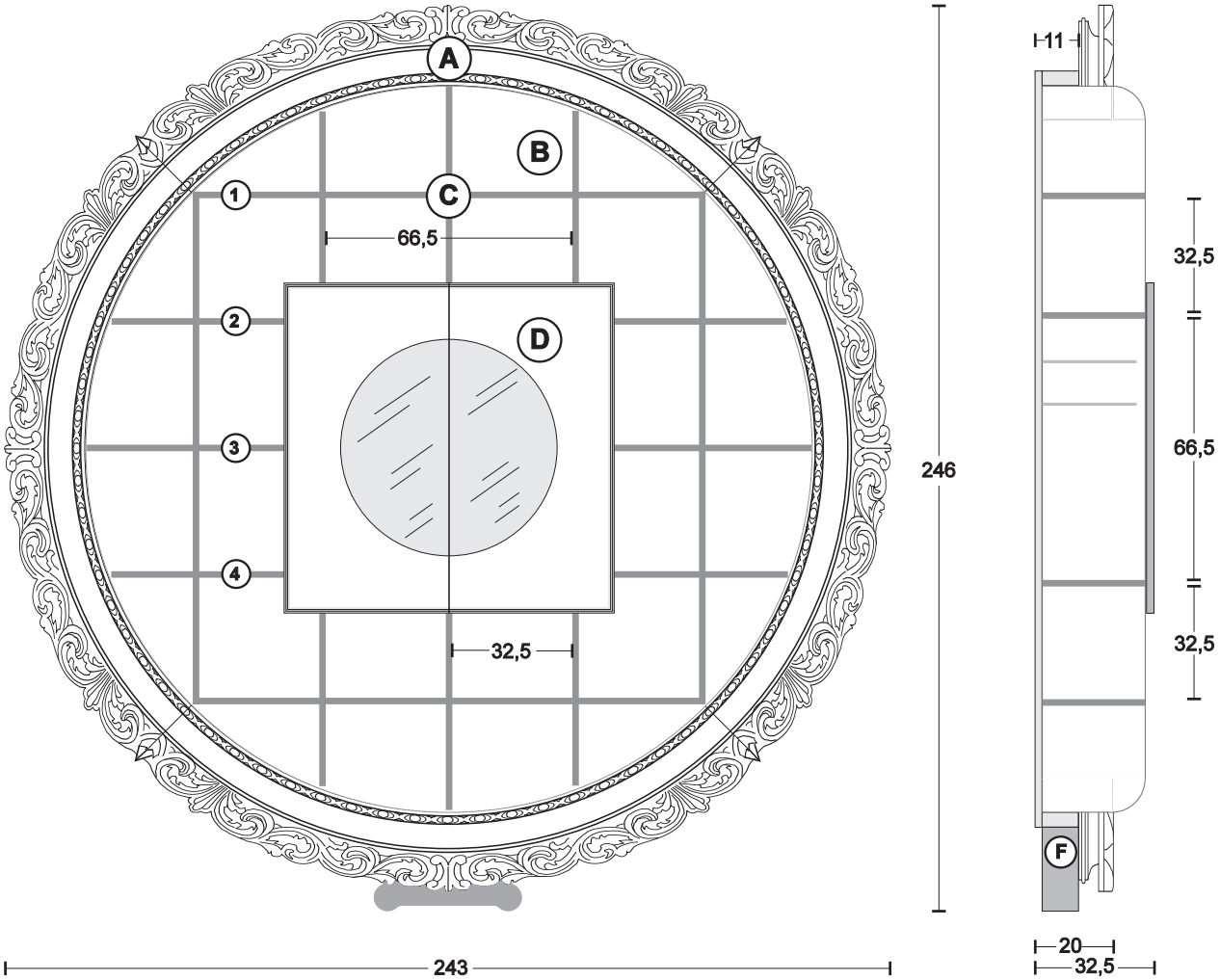

Finiture e combinazioni - Finishings and combinations

(A) ORO/ARGENTO FOGLIA (gold/silver foil)	(B) ORO/ARGENTO (gold/silver foil)	(C)+(F) TUTTI I LACCATI (all our laquered)	(D) TUTTI I LACCATI (all our laquered)	€ 19.215,90
(A) BIANCO (white) (decorazioni oro foglia - gold foil decorations)	(B) ORO FOGLIA (gold foil)	(C)+(F) BIANCO (white)	(D) BIANCO (white)	€ 19.215,90
(A) BIANCO LUCIDO (gloss white) (decorazioni argento foglia - silver foil decorations)	(B) ARG. FOGLIA (silver foil)	(C)+(F) BIANCO (white)	(D) BIANCO LUCIDO (gloss-white)	€ 19.468,90
(A) NERO LUCIDO (gloss black) (decorazioni argento foglia - silver foil decorations)	(B) ARG. FOGLIA (silver foil)	(C)+(F) NERO (black)	(D) NERO LUCIDO (gloss black)	€ 19.468,90
(A) ARGENTO patinato bianco (silver foil+white patina)	(B) ARG. FOGLIA (silver foil)	(C)+(F) BIANCO (white)	(D) BIANCO OPACO decorazioni argento foglia (white opaque laquering+silver foil decorations)	€ 19.342,40
(A) ORO patinato avorio (gold foil+ivory patina)	(B) ORO FOGLIA (gold foil)	(C)+(F) AVORIO (Ivory)	(D) AVORIO OPACO decorazioni oro foglia (ivory opaque laquering+gold foil decorations)	€ 19.342,40
(A)+(D) CRACKLE' avorio decorazioni argento/oro foglia (Ivory cracklè+silver/gold foil decorations)	(B) ORO/ARGENTO FOGLIA (gold/silver foil)	(C)+(F) AVORIO OPACO (ivory opaque laquering)		€ 19.455,70

STAR GATE "BIG MIRROR" - BAROQUE

Specchio a parete completo di consolle a 2 cassetti e vano a giorno - led bianchi perimetrali - bolle perimetrali su specchio
Wall-mirror with 2-drawer-consolle and open compartment- white leds on perimeter- bubbles on mirror border

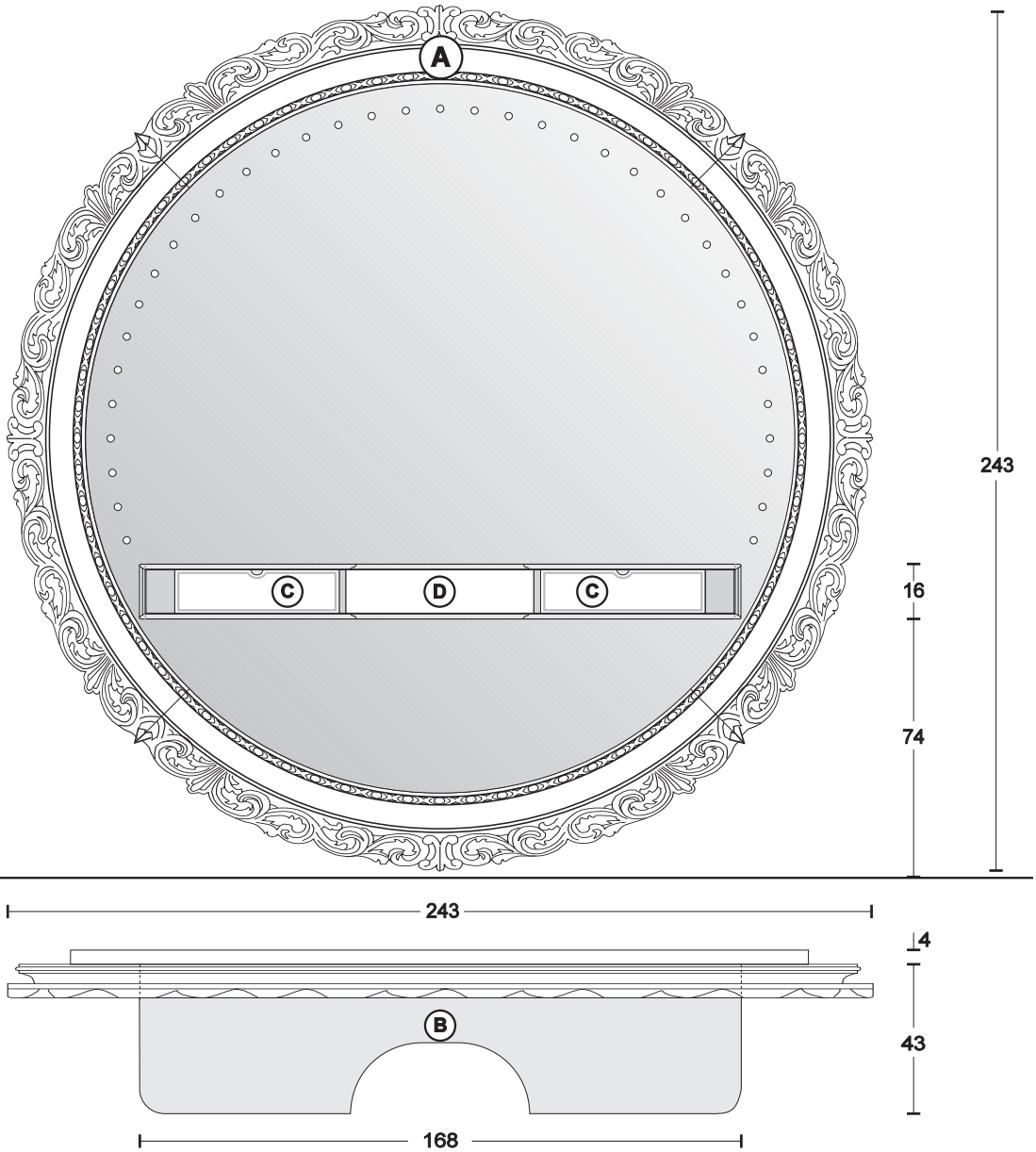

Finiture e combinazioni - Finishings and combinations

A ORO/ARGENTO FOGLIA (gold/silver foil)	B ORO/ARGENTO FOGLIA (gold/silver foil)	C TUTTI I LACCATI (all our laquered)	D TUTTI I LACCATI (all our laquered)	€ 14.157,00
A BIANCO (white) (decorazioni oro foglia - gold foil decorations)	B ORO FOGLIA (gold foil)	C BIANCO (white)	D BIANCO (white)	€ 14.157,00
A BIANCO LUCIDO (gloss white) (decorazioni argento foglia - silver foil decorations)	B ARG. FOGLIA (silver foil)	C BIANCO LUCIDO (gloss-white)	D BIANCO (white)	€ 14.532,10
A NERO LUCIDO (gloss black) (decorazioni argento foglia - silver foil decorations)	B ARG. FOGLIA (silver foil)	C NERO LUCIDO (gloss black)	D NERO (black)	€ 14.532,10
A+B ARGENTO patinato bianco (silver foil+white patina)		C BIANCO decorazioni argento foglia (white+silver foil decoration)	D BIANCO (white)	€ 14.282,40
A+B ORO patinato avorio (gold foil+ivory patina)		C AVORIO decorazioni oro foglia (ivory+gold foil decoration)	D AVORIO (ivory)	€ 14.282,40
A+B CRACKLE' AVORIO+decorazioni oro/argento (ivory cracklè+silver/gold foil decorations)		C ORO/ARGENTO foglia (gold/silver foil)	D AVORIO (ivory)	€ 14.408,90

FRAME - 214 BAROQUE-MIRROR

SPECCHIERA A PARETE-WALL MIRROR

cornice-frame:TUTTI I LACCATI-all our laquered	**€ 5.376,80**
cornice-frame: ARGENTO/ORO FOGLIA-silver/gold foil	**€ 5.879,50**
cornice - frame: BIANCO/NERO lucido-Gloss White/Black (decorazioni argento foglia-silver foil decorations)	**€ 6.317,30**
cornice - frame: ARGENTO patinato bianco/ORO patinato avorio silver foil+white patina/gold foil+ivory patina	**€ 5.970,80**
cornice - frame:AVORIO cracklè+decor. argento/oro Ivory cracklè+silver/gold foil decorations	**€ 6.059,90**

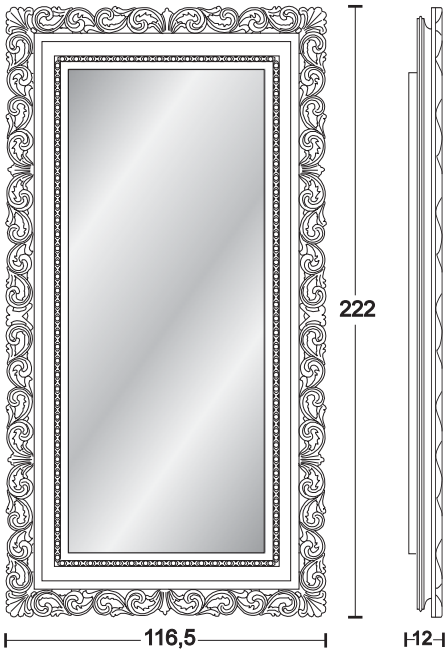

FRAME - 214 BAROQUE-SOLO FRAME

SOLO CORNICE - JUST FRAME

cornice-frame:TUTTI I LACCATI-all our laquered	**€ 5.060,00**
cornice-frame: ARGENTO/ORO FOGLIA-silver/gold foil	**€ 5.531,90**
cornice - frame: BIANCO/NERO lucido-Gloss White/Black (decorazioni argento foglia-silver foil decorations)	**€ 5.982,90**
cornice - frame: ARGENTO patinato bianco/ORO patinato avorio silver foil+white patina/gold foil+ivory patina	**€ 5.629,80**
cornice - frame:AVORIO cracklè+decor. argento/oro Ivory cracklè+silver/gold foil decorations	**€ 5.717,80**

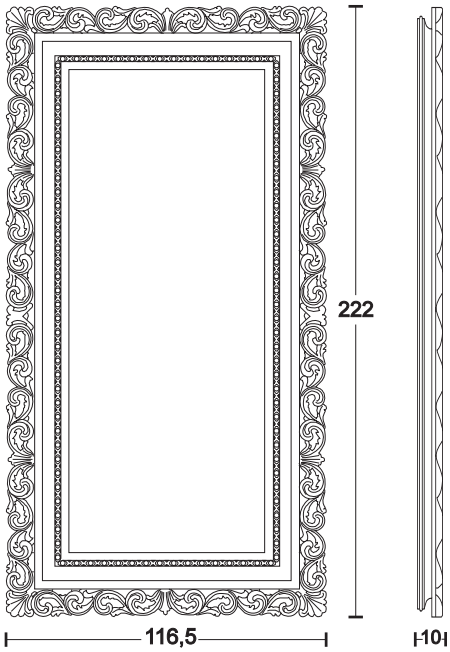

BODY ROUND LIGHT-BAROQUE

Corpo illuminante a parete - Wall Body light

cornice-frame:Oro/Argento foglia-Gold/Silver Foil Bianco+oro/argento-White+gold/silver	**€ 5.968,60**
cornice-frame:Bianco/Nero lucido-Gloss White/Black (decorazioni argento foglia-silver foil decorations)	**€ 6.205,10**
cornice-frame:Arg+patina bianca/oro+patina avorio Silver foil+white patina/gold foil+ivory patina	**€ 6.019,20**
cornice-frame:Cracklè avorio+decor argento/oro Ivory cracklè+silver/gold foil decorations	**€ 6.070,90**

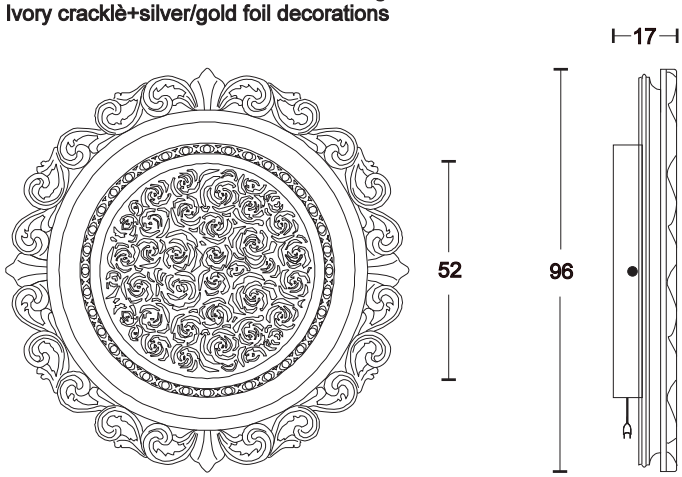

Pannello frontale traforato color Nero-Bianco-Crema-Avorio con tamponatura oro/argento foglia.
Completo di interruttore e spina elettrica (220 Volts)
Frontal board in black-White-Cream-Ivory colour with gold or silver foil shadings.Provided with switch and plug (220 volts)

BODY ROUND MIRROR-BAROQUE

Specchiera a parete-Wall Mirror

cornice-frame:Oro/Argento foglia-Gold/Silver Foil Bianco+oro/argento-White+gold/silver	**€ 4.585,90**
cornice-frame:Bianco/Nero lucido-Gloss White/Black (decorazioni argento foglia-silver foil decorations)	**€ 4.825,70**
cornice-frame:Arg+patina bianca/oro+patina avorio Silver foil+white patina/gold foil+ivory patina	**€ 4.636,50**
cornice-frame:Cracklè avorio+decor argento/oro Ivory cracklè+silver/gold foil decorations	**€ 4.687,10**

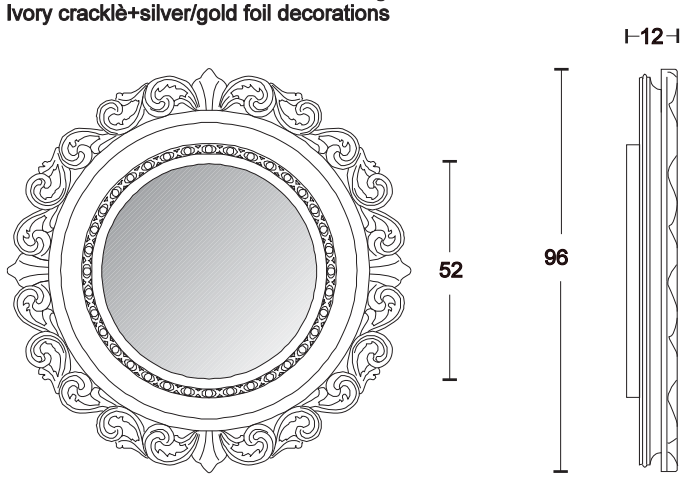

FRAME - 120 BAROQUE

Elemento porta CD-DVD a parete
Wall CD-DVD rack

cornice:TUTTI I LACCATI-interno:TUTTI I LACCATI (frame:all our laquered-inside:all our laquered)	€ 4.213,00
cornice:ORO/ARGENTO foglia-interno:METALTITANIO o ROSSO CARDINALE (frame:gold/silver foil-inside:metaltitanio or rosso cardinale	€ 4.569,40
cornice:BIANCO/NERO LUCIDO-interno:BIANCO/NERO (frame:gloss white/black-inside:opaque white/black)	€ 4.870,80
cornice:ARGENTO foglia patinato bianco-interno:BIANCO (frame:silver foil+white patina-inside:white)	€ 4.617,80
cornice:ORO foglia patinato avorio-interno:AVORIO (frame:gold foil+ivory patina-inside:ivory)	€ 4.617,80
cornice:CRACKLE' AVORIO+decorazioni oro/argento foglia interno: AVORIO (frame:ivory cracklè+gold/silver decorations-inside:ivory)	€ 4.668,40

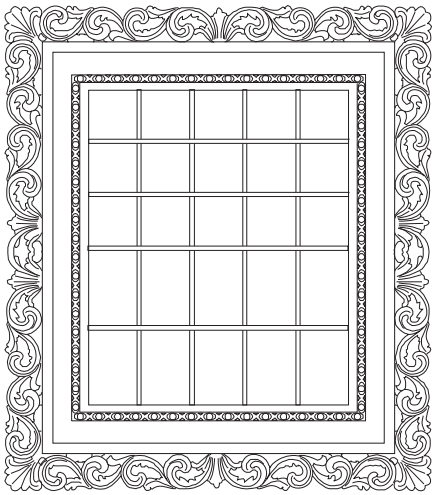

art.: F12-3C3V
234 CD + 90 DVD

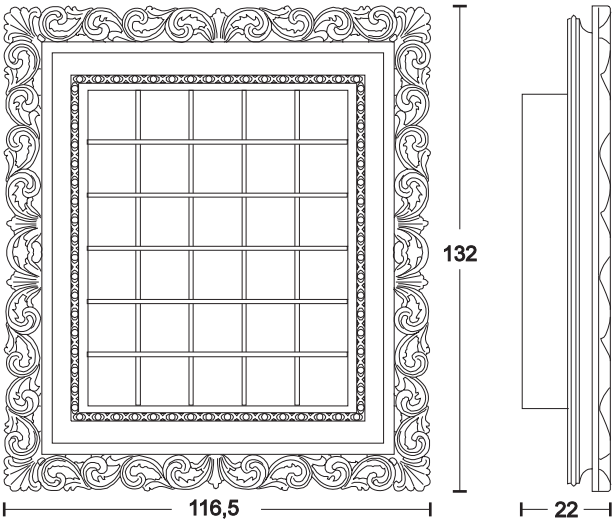

art.: F12-6C
390 CD

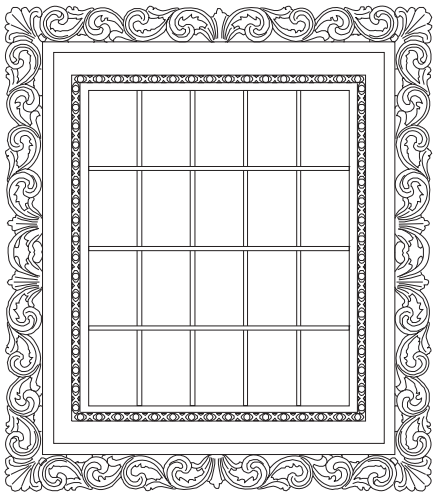

art.:F12-4V
180 DVD

FRAME 120 BAROQUE-MIRROR

Specchiera a parete - Wall Mirror

cornice:TUTTI I LACCATI-(frame: all our laquered)	€ 3.836,80
cornice:ORO/ARGENTO FOGLIA-(frame:Gold/silver foil)	€ 4.205,30
cornice:BIANCO/NERO LUCIDO-(frame:gloss white/black) decorazioni argento foglia-(silver foil decorations)	€ 4.501,20
cornice:ARGENTO foglia patinato bianco (frame: silver foil+white patina)	€ 4.255,90
cornice:ORO foglia patinato avorio (frame:Gold foil+ivory patina)	€ 4.255,90
cornice:CRACKLE' AVORIO+decorazioni oro/argento (frame:Ivory cracklè+gold/silver foil decorations)	€ 4.306,50

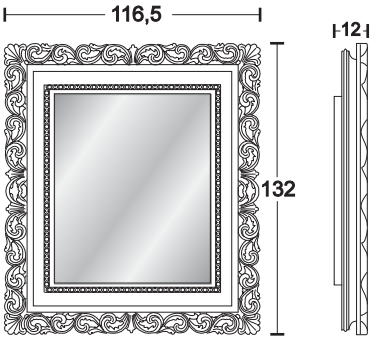

FRAME 120 BAROQUE - SOLO FRAME

Solo cornice - Just Frame

cornice:TUTTI I LACCATI-(frame: all our laquered)	€ 3.643,20
cornice:ORO/ARGENTO FOGLIA-(frame:Gold/silver foil)	€ 3.974,30
cornice:BIANCO/NERO LUCIDO-(frame:gloss white/black) decorazioni argento foglia-(silver foil decorations)	€ 4.283,40
cornice:ARGENTO foglia patinato bianco (frame: silver foil+white patina)	€ 4.024,90
cornice:ORO foglia patinato avorio (frame:Gold foil+ivory patina)	€ 4.024,90
cornice:CRACKLE' AVORIO+decorazioni oro/argento (frame:Ivory cracklè+gold/silver foil decorations)	€ 4.075,50

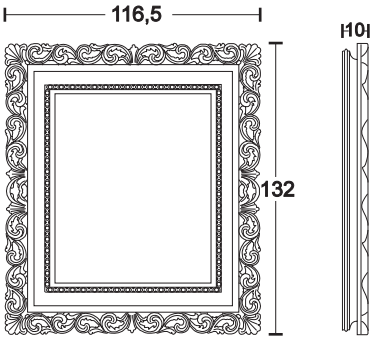

FRAME - 214 BAROQUE

Elemento porta CD-DVD a parete
Wall CD-DVD rack

cornice:LACCATI OPACHI-interno:LACCATI OPACHI (frame:all opaque laquered-inside:all opaque laquered)	**€ 6.099,50**
cornice:ORO FOGLIA-interno:METALTITANIO o ROSSO CARDINALE (frame:gold foil-inside:metaltitanio or rosso cardinale)	**€ 6.723,20**
cornice:ARGENTO FOGLIA-interno:METALTITANIO (frame:silver foil-inside:metaltitanio)	**€ 6.723,20**
cornice:BIANCO/NERO LUCIDO-interno:BIANCO/NERO (frame:gloss white/black-inside:white/black)	**€ 7.126,90**
cornice:ARGENTO patinato bianco-interno:BIANCO (frame:silver foil+white patina-inside:white)	**€ 6.824,40**
cornice:ORO foglia patinato avorio-interno:AVORIO (frame:gold foil+ivory patina-inside:ivory)	**€ 6.824,40**
cornice:CRACKLE' AVORIO+decorazioni oro/argento interno:AVORIO (frame:ivory cracklè+gold/silver decorations-inside:Ivory)	**€ 6.913,50**

art. F214-12C
780 CD

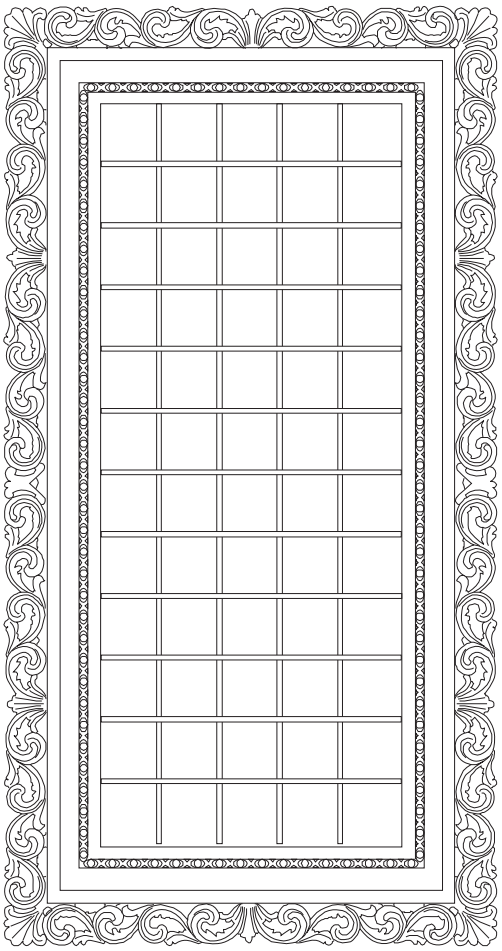

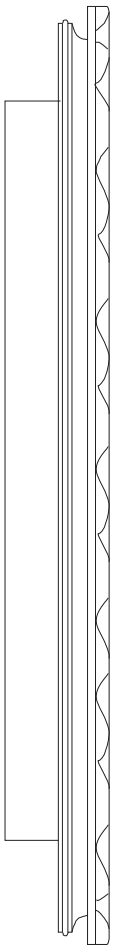

222

116,5

22

art. F214-9C2V
585 CD+90 DVD

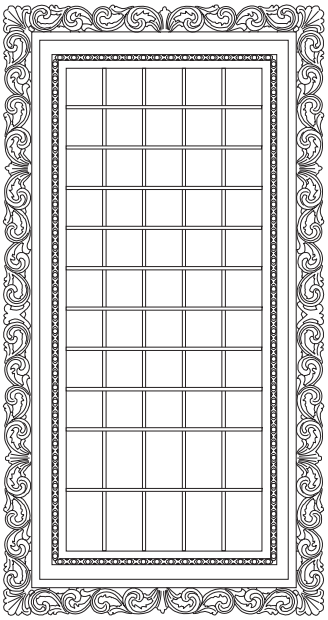

art. F214-6C4V
390 CD+180 DVD

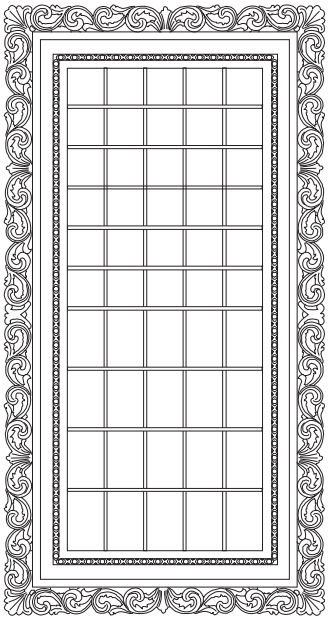

art. F214-3C6V
234 CD+270 DVD

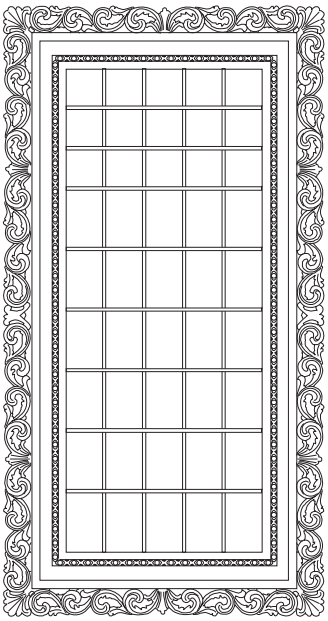

art. F214-8V
360 DVD

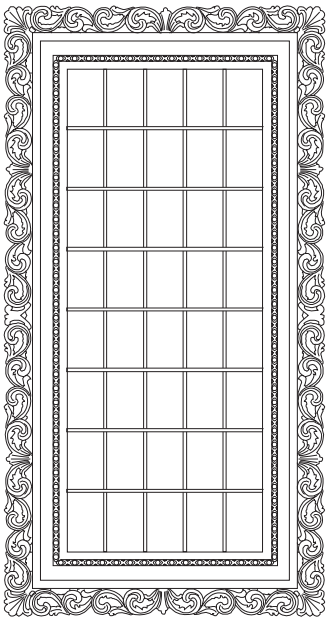

BODY LIGHT - BAROQUE

Corpo illuminante a parete
Wall Body-light

Completo di interruttore e spina elettrica (220 V.)
provided with switch and plug (220 volts)

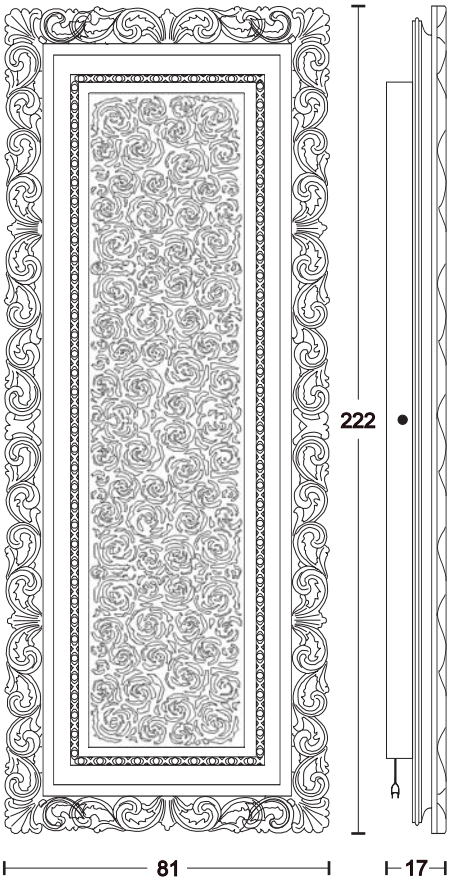

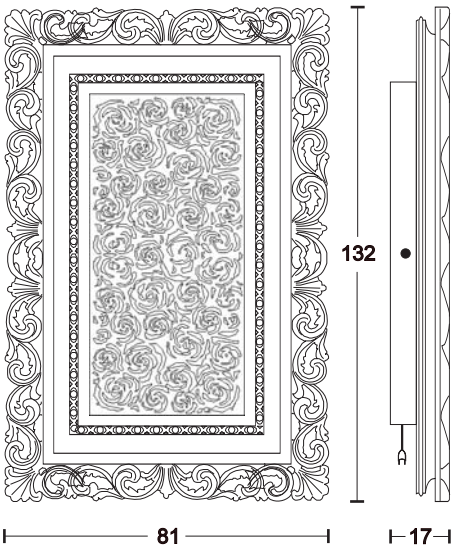

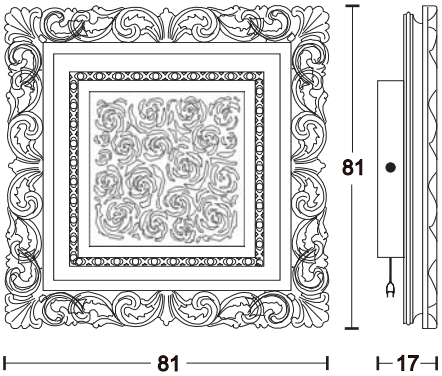

BODY LIGHT 214-BAROQUE	BODY LIGHT 120-BAROQUE	BODY LIGHT 80-BAROQUE
cornice - frame € 7.936,50 ORO/ARGENTO FOGLIA-GOLD/SILVER FOIL	cornice - frame € 5.817,90 ORO/ARGENTO FOGLIA-GOLD/SILVER FOIL	cornice - frame € 3.485,90 ORO/ARGENTO FOGLIA-GOLD/SILVER FOIL
cornice - frame € 7.462,40 TUTTI I LACCATI-all our laquered	cornice - frame € 5.537,40 TUTTI I LACCATI-all our laquered	cornice - frame € 3.223,00 TUTTI I LACCATI-all our laquered
cornice - frame € 8.273,10 BIANCO/NERO lucido-gloss White/black	cornice - frame € 6.024,70 BIANCO/NERO lucido-gloss White/black	cornice - frame € 3.626,70 BIANCO/NERO lucido-gloss White/black
cornice - frame € 8.026,70 Argento+patina bianco/Oro+patina avorio Silver foil+white patina/gold foil+ivory patinal	cornice - frame € 5.869,60 Argento+patina bianco/Oro+patina avorio Silver foil+white patina/gold foil+ivory patinal	cornice - frame € 3.528,80 Argento+patina bianco/Oro+patina avorio Silver foil+white patina/gold foil+ivory patinal
cornice - frame € 8.089,40 CRACKLE' avorio+decorazioni oro/argento Ivory cracklè+silver/gold foil decorations	cornice - frame € 5.920,20 CRACKLE' avorio+decorazioni oro/argento Ivory cracklè+silver/gold foil decorations	cornice - frame € 3.579,40 CRACKLE' avorio+decorazioni oro/argento Ivory cracklè+silver/gold foil decorations
Pannello frontale traforato color Nero o Bianco o Crema o avorio, con tamponatura oro o argento foglia Frontal board in black or White or Cream or Ivory colour with gold or silver foil shadings	Pannello frontale traforato color Nero o Bianco o Crema o avorio, con tamponatura oro o argento foglia Frontal board in black or White or Cream or Ivory colour with gold or silver foil shadings	Pannello frontale traforato color Nero o Bianco o Crema o avorio, con tamponatura oro o argento foglia Frontal board in black or White or Cream or Ivory colour with gold or silver foil shadings

BODY MIRROR - BAROQUE

SPECCHIERA A PARETE
WALL MIRROR

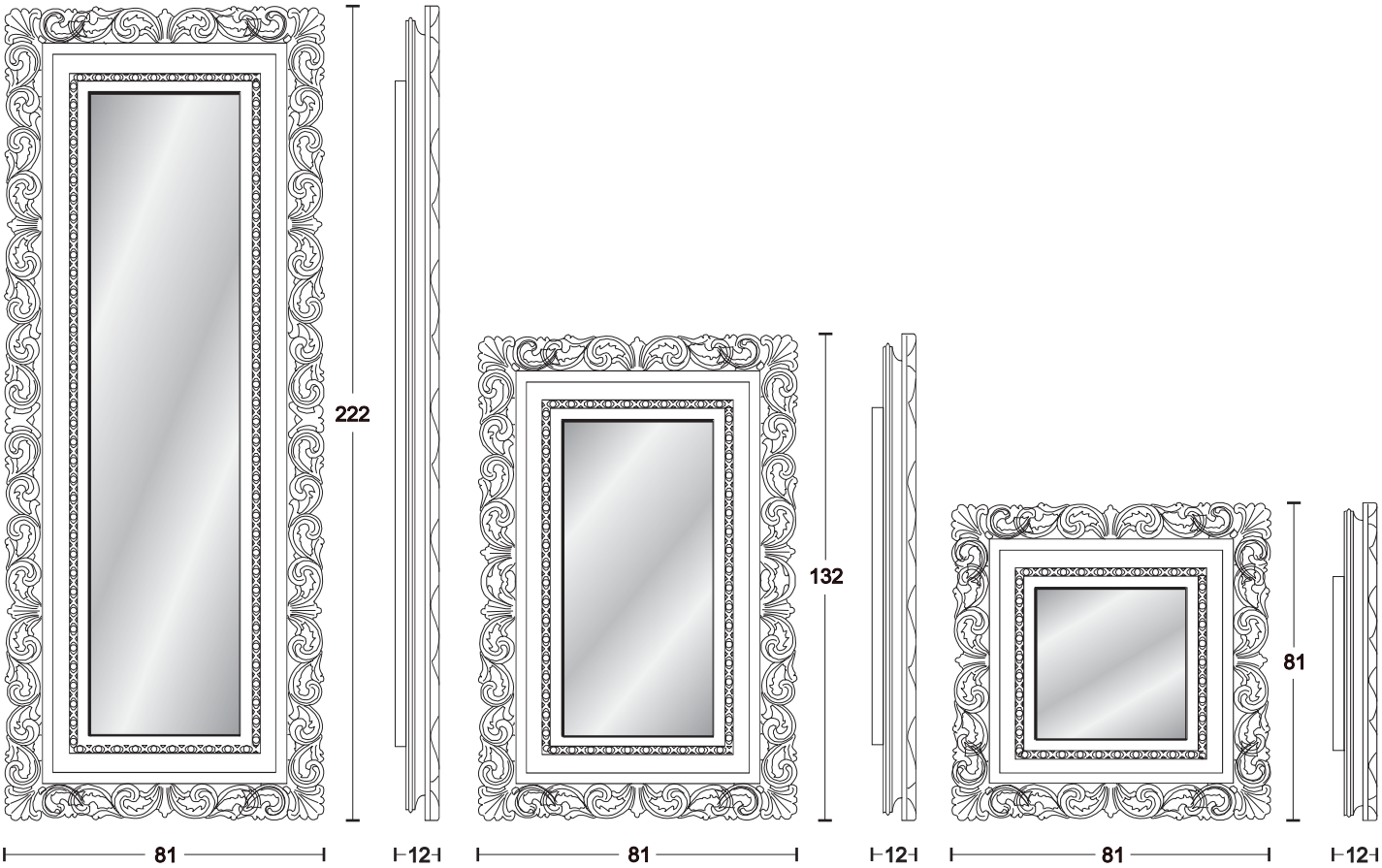

BODY MIRROR 214-BAROQUE

Specchiera a parete
Wall Mirror

cornice - frame **€ 5.800,30**
ORO/ARGENTO FOGLIA-GOLD/SILVER FOIL

cornice - frame **€ 5.185,40**
TUTTI I LACCATI-all our laquered

cornice - frame **€ 6.145,70**
BIANCO/NERO lucido-gloss White/black

cornice - frame **€ 5.888,30**
Argento+patina bianco/Oro+patina avorio
Silver foil+white patina/gold foil+ivory patinal

cornice - frame **€ 5.952,10**
CRACKLE' avorio+decorazioni oro/argento
Ivory cracklè+silver/gold foil decorations

BODY MIRROR 120-BAROQUE

Specchiera a parete
Wall Mirror

cornice - frame **€ 4.115,10**
ORO/ARGENTO FOGLIA-GOLD/SILVER FOIL

cornice - frame **€ 3.648,70**
TUTTI I LACCATI-all our laquered

cornice - frame **€ 4.339,50**
BIANCO/NERO lucido-gloss White/black

cornice - frame **€ 4.165,70**
Argento+patina bianco/Oro+patina avorio
Silver foil+white patina/gold foil+ivory patinal

cornice - frame **€ 4.216,30**
CRACKLE' avorio+decorazioni oro/argento
Ivory cracklè+silver/gold foil decorations

BODY MIRROR 80-BAROQUE

Specchiera a parete
Wall Mirror

cornice - frame **€ 2.761,00**
ORO/ARGENTO FOGLIA-GOLD/SILVER FOIL

cornice - frame **€ 2.614,70**
TUTTI I LACCATI-all our laquered

cornice - frame **€ 3.012,90**
BIANCO/NERO lucido-gloss White/black

cornice - frame **€ 2.805,00**
Argento+patina bianco/Oro+patina avorio
Silver foil+white patina/gold foil+ivory patinal

cornice - frame **€ 2.854,50**
CRACKLE' avorio+decorazioni oro/argento
Ivory cracklè+silver/gold foil decorations

SHINING SUN - BAROQUE

Corpo illuminante a parete - Wall Body light

cornice-frame:Oro/Argento Foglia-Gold/Silver Foil **€ 8.121,30**
Bianco+Oro/Argento Foglia-White+Gold/Silver Foil

cornice-frame:Bianco/Nero Lucido-Gloss White/Black **€ 8.475,50**
(Decorazioni argento foglia-silver foil decorations)

cornice-frame:Argento+patina bianco/oro+patina avorio **€ 8.184,00**
Silver foil+white patina/gold foil+ivory patina

cornice-frame:Cracklè avorio+decor oro/argento **€ 8.247,80**
Ivory cracklè+silver/gold foil decorations

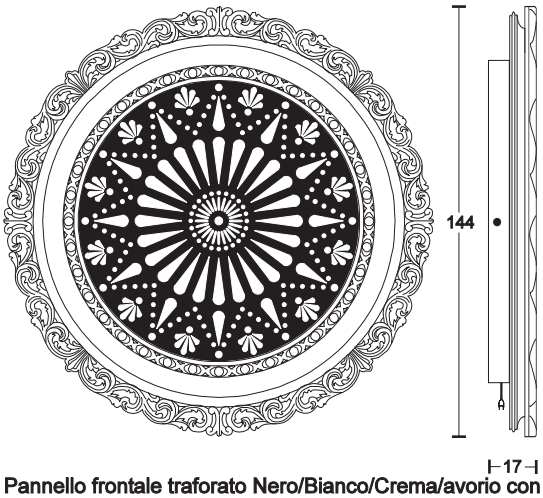

Pannello frontale traforato Nero/Bianco/Crema/avorio con spina (220 Volts)
Frontal board in black/White/cream/ivory provided with plug (220 volts)

SHINING SUN - BAROQUE - mirror

Specchiera a parete - Wall mirror

cornice-frame:Oro/Argento Foglia-Gold/Silver Foil **€ 6.122,60**
Bianco+Oro/Argento Foglia-White+Gold/Silver Foil

cornice-frame:Bianco/Nero Lucido-Gloss White/Black **€ 6.476,80**
(Decorazioni argento foglia-silver foil decorations)

cornice-frame:Argento+patina bianco/oro+patina avorio **€ 6.186,40**
Silver foil+white patina/gold foil+ivory patina

cornice-frame:Cracklè avorio+decor oro/argento **€ 6.249,10**
Ivory cracklè+silver/gold foil decorations

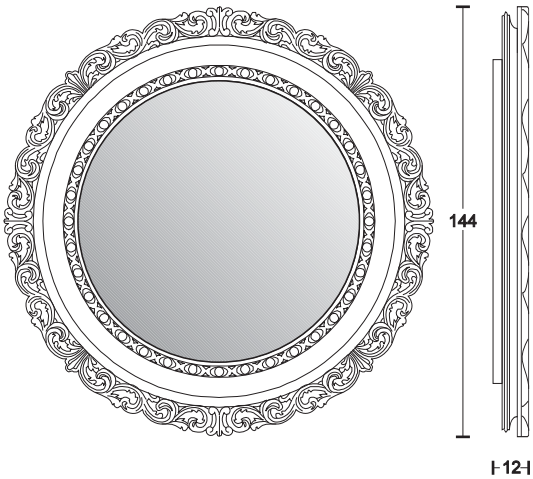

SITTING CASE - BAROQUE

Cassapanca - Sitting case

Struttura-Structure: oro/argento foglia-gold/silver foil. **€ 5.920,20**
Pannelli traforati-Frontal panels: Nero/Bianco/Crema-Black/white/cream
Piano chiusura-opening top:Metaltitanio/Bianco/Crema-Metaltitanio/white/cream
completo di ammortizzatori-with shock absorber

Struttura-Structure: Bianco/Nero Lucido-gloss White **€ 6.338,20**
Pannelli traforati-Frontal panel: Bianco/Nero-white/black
Piano chiusura-opening top:Bianco/nero-white/black
Completo di ammortizzatori-with Shock absorber

Struttura-Structure:oro/argento+patina avorio/bianco-gold/silver foil+ivory/white patina. **€ 5.984,00**
Pannelli traforati-Frontal panels: avorio/bianco-Ivory/white
Piano chiusura-opening top:Avorio/bianco+decorio oro/argento-Ivory/white+gold/silver foil decoration
completo di ammortizzatori-with shock absorber

Struttura-Structure: Cracklè avorio+decorazioni oro/argento **€ 6.077,50**
Ivory cracklè+gold/silver deocration
Pannelli traforati-Frontal panels: avorio-Ivory
Piano chiusura-opening top:Cracklè avorio+decorazioni oro/argento-
Ivory cracklè+gold/silver foil decoration/completo di ammortizzatori-with shock absorber

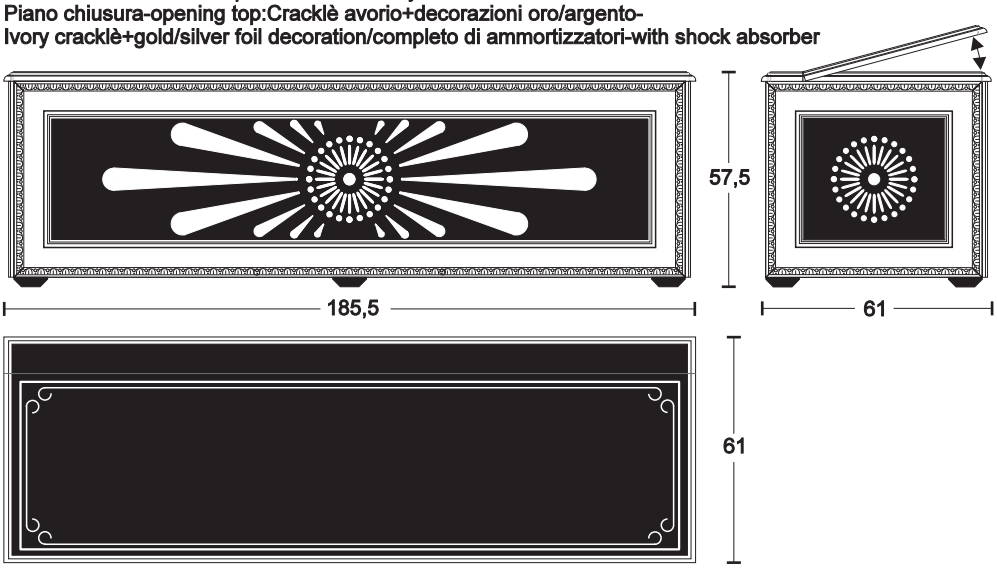

TRAYS

OPTIONAL:
Coppia vassoi scorrevoli - METALTITANIO
Couple of sliding trays - METALTITANIO

€ 663,30

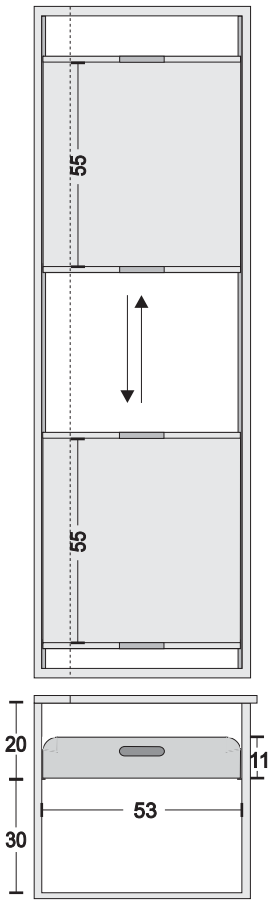

PICTURES AND MIRRORS - BAROQUE

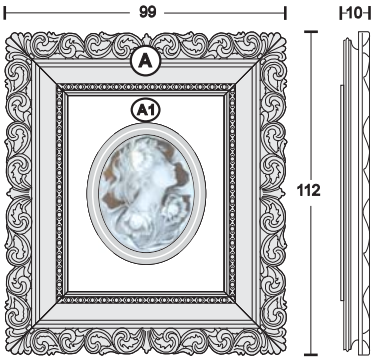

CAMMEO

Ovale con Cammeo (Sinistro o destro)
Oval with Cameo (Left or Right)

(A) Oro/Argento Foglia-Gold/Silver foil (A1) tutti i laccati opachi-all opaque laquering	€ 4.449,50
(A) Nero/Bianco Lucido+Decori Oro/ argento-Gloss Black/White+Gold/Silver Foil Decorations (A1) tutti i laccati opachi-all opaque laquering	€ 4.688,20
(A) Oro/argento+patina avorio/bianco-Gold/silver foil+patina ivory/white (A1) avorio/bianco-ivory/white	€ 4.500,10
(A) Cracklè avorio+decori oro/argento-Ivory cracklè+gold/silver foil decoration (A1) avorio-ivory	€ 4.550,70

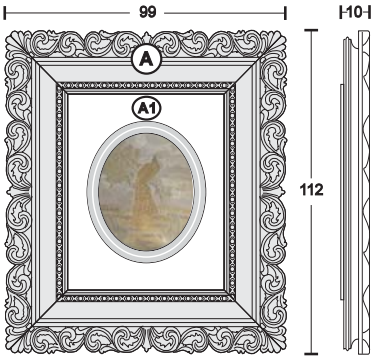

PAVONE

Ovale con Pavone Artistico oro 23/22/20/18/16/12 Carati (Sinistro o destro)
Oval with Artistic peacock Gold 23/22/20/18/16/12 carats (Left or Right)

(A) Oro/Argento Foglia-Gold/Silver foil (A1) tutti i laccati opachi-all opaque laquering	€ 6.261,20
(A) Nero/Bianco Lucido+Decori Oro/ argento-Gloss Black/White+Gold/Silver Foil Decorations (A1) tutti i laccati opachi-all opaque laquering	€ 6.502,10
(A) Oro/argento+patina avorio/bianco-Gold/silver foil+patina ivory/white (A1) avorio/bianco-ivory/white	€ 6.312,90
(A) Cracklè avorio+decori oro/argento-Ivory cracklè+gold/silver foil decoration (A1) avorio-ivory	€ 6.363,50

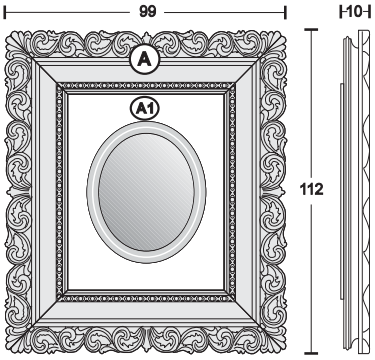

OVAL MIRROR

Ovale con specchio bisellato
Oval with bevelled mirror

(A) Oro/Argento Foglia-Gold/Silver foil (A1) tutti i laccati opachi-all opaque laquering	€ 4.197,60
(A) Nero/Bianco Lucido+Decori Oro/ argento-Gloss Black/White+Gold/Silver Foil Decorations (A1) tutti i laccati opachi-all opaque laquering	€ 4.436,30
(A) Oro/argento+patina avorio/bianco-Gold/silver foil+patina ivory/white (A1) avorio/bianco-ivory/white	€ 4.248,20
(A) Cracklè avorio+decori oro/argento-Ivory cracklè+gold/silver foil decoration (A1) avorio-ivory	€ 4.298,80

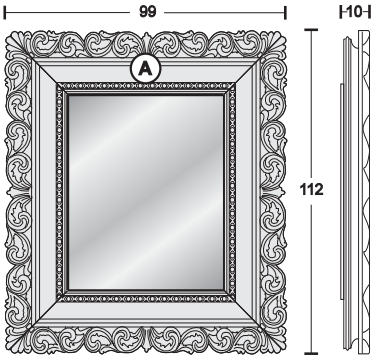

MIRROR

Specchio anticato o normale
Antique mirror or standard

(A) Oro/Argento Foglia-Gold/Silver foil	€ 4.209,70
(A) Nero/Bianco Lucido+Decori Oro/ argento-Gloss Black/White+Gold/Silver Foil Decorations	€ 4.449,50
(A) Oro/argento+patina avorio/bianco-Gold/silver foil+patina ivory/white	€ 4.260,30
(A) Cracklè avorio+decori oro/argento-Ivory cracklè+gold/silver foil decoration	€ 4.310,90

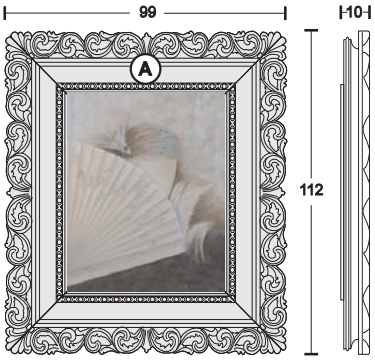

THE FAN

Dipinto materico "Donna con Ventaglio" (Sinistro o destro)
Hand-made Materic painting "Donna con Ventaglio" (Left or Right)

(A) Oro/Argento Foglia-Gold/Silver foil	€ 4.556,20
(A) Nero/Bianco Lucido+Decori Oro/ argento-Gloss Black/White+Gold/Silver Foil Decorations	€ 4.796,00
(A) Oro/argento+patina avorio/bianco-Gold/silver foil+patina ivory/white	€ 4.606,80
(A) Cracklè avorio+decori oro/argento-Ivory cracklè+gold/silver foil decoration	€ 4.657,40

CIAIKA -170 BAROQUE

Tavolino porta CD/DVD per 800 Cd (e/o 378 DVD)
Coffee table CD/DVD rack for 800 CD (and or 378 DVD

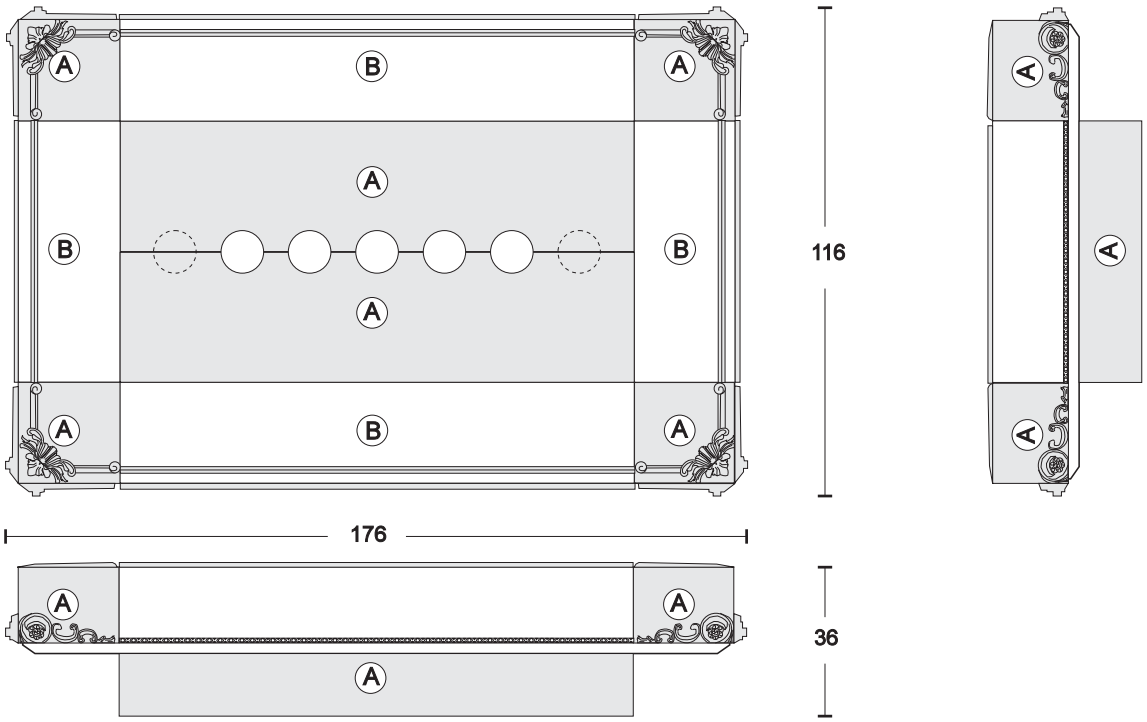

Finiture esterne standard
Outside Standard finishings

A	ORO/ARGENTO FOGLIA (gold foil)	B	TUTTI I LACCATI(all our laquered) +(oro foglia-gold foil)	€ 6.965,20
A	ARGENTO FOGLIA (silver foil)	B	Bianco/nero lucido (gloss white/black)	€ 7.549,30
A	ARGENTO FOGLIA+patina bianca (silver foil+white patina)	B	BIANCO (white)	€ 7.027,90
A	ORO FOGLIA+patina avorio (gold foil+ivory patina)	B	AVORIO (ivory)	€ 7.027,90
A	AVORIO (ivory)	B	CRACKLE' avorio+decorazioni oro/argento (ivori cracklè+gold/silver foil decoration)	€ 7.091,70

Finitura superfici interne: METALSILVER o METALGOLD
Finishings of inside surface: METALSILVER or METALGOLD

CIAIKA -110 BAROQUE

Tavolino porta CD/DVD per 490 Cd (e/o 218 DVD)
Coffe table CD/DVD rack for 490 CD (and or 218 DVD)

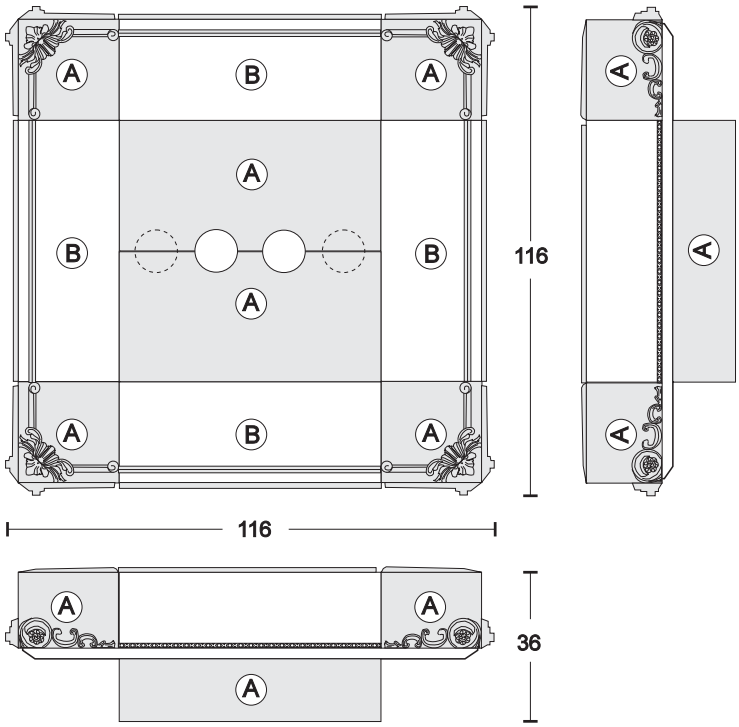

Finiture esterne standard
Outside Standard finishings

A	ORO/ARGENTO foglia (gold foil)	B	TUTTI I LACCATI (all our laquered) +(oro foglia-gold foil)	€ 5.709,00
A	ARGENTO FOGLIA (silver foil)	B	Bianco/nero lucido (gloss white/black)	€ 6.373,40
A	ARGENTO patina bianca (silver foil+white patina)	B	BIANCO (white)	€ 5.771,70
A	ORO+patina avorio (gold foil+ivory patina)	B	AVORIO (ivory)	€ 5.771,70
A	AVORIO (ivory)	B	CRACKLE' avorio decorazioni oro/argento (ivory cracklè gold/silver foil decoration)	€ 5.816,80

Finitura superfici interne: METALSILVER o METALGOLD
Finishings of inside surface: METALSILVER or METALGOLD

CIAIKA - 110 SLIM - BAROQUE

Tavolino porta CD/DVD per 180 Cd (e/o 92 DVD)
Coffe table CD/DVD rack for 180 CD (and or 92 DVD)

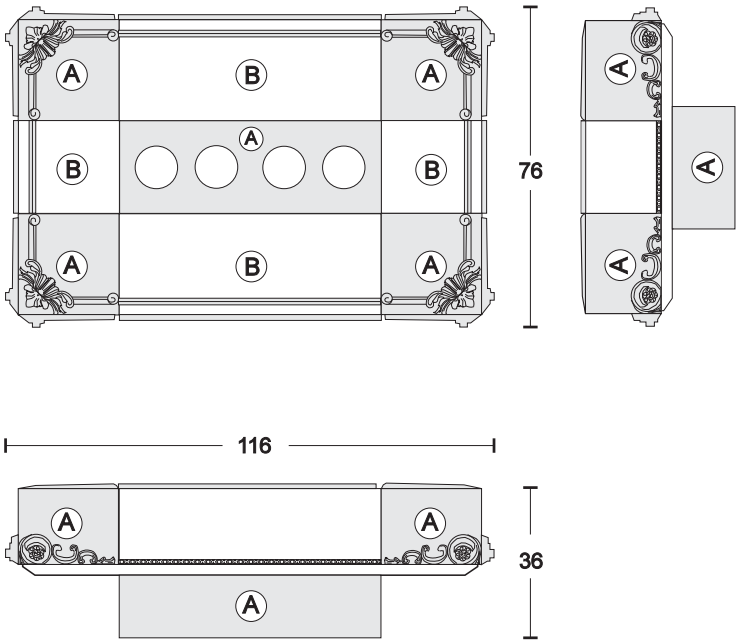

Finiture esterne standard
Outside Standard finishings

A	ORO/ARGENTO foglia (gold foil)	B	TUTTI I LACCATI (all our laquered) +(oro foglia-gold foil)	€ 5.177,70
A	ARGENTO FOGLIA (silver foil)	B	Bianco/nero lucido (gloss white/black)	€ 5.709,00
A	ARGENTO patina bianca (silver foil+white patina)	B	BIANCO (white)	€ 5.240,40
A	ORO+patina avorio (gold foil+ivory patina)	B	AVORIO (ivory)	€ 5.240,40
A	AVORIO (ivory)	B	CRACKLE' avorio decorazioni oro/argento (ivory cracklè gold/silver foil decoration)	€ 5.278,90

Finitura superfici interne: METALSILVER o METALGOLD
Finishings of inside surface: METALSILVER or METALGOLD

1 WINDOWS - COFFEE TABLE - BAROQUE

Tavolino contenitore con vassoi estraibili - Coffee table container removable tray

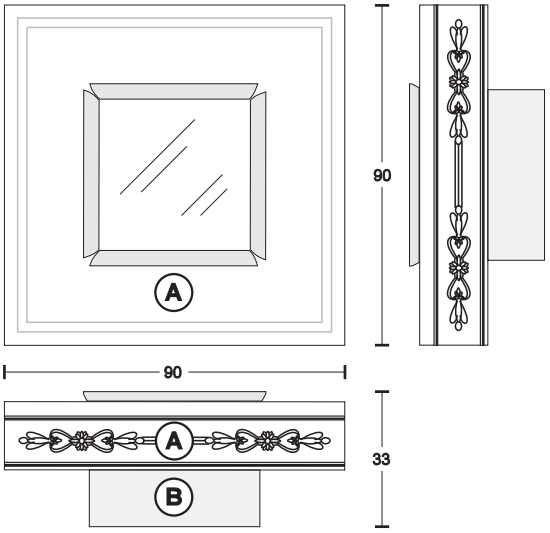

(A) tutti i laccati opachi, decori oro/argento foglia **€ 3.643,20**
vassoi in vetro temperato, maniglie oro/argento foglia
All opaque laquering, decoration gold/silver foil
Ardened Glass Trays,handles gold/silver foil
(B) tutti i laccati opachi-All opaque laquering

(A) Bianco/Nero lucido, decori oro/argento foglia **€ 4.060,10**
vassoi in vetro temperato, maniglie decori oro/argento foglia
Gloss White or Black, decoration gold/silver foil
Ardened Glass Trays,handles Gold/Silverfoil
(B) tutti i laccati opachi-All opaque laquering

(A) Cracklè avorio+decorazioni oro/argento foglia **€ 3.705,90**
vassoio in vetro temperato, maniglie oro/argento
Ivory cracklè+gold/silver foil decoration
Ardened grass trays+gold/silver foil handles
(B) Avorio-Ivory

(A) Oro/argento foglia+patina avorio/bianco **€ 3.675,10**
decori oro/argento foglia-vassoi in vetro temperato,
maniglie decori oro/argento foglia
Gold/silver+Ivory/white patina
decoration gold/silver foil - Ardened Glass Trays
handles Gold/Silverfoil
(B) Avorio/bianco-Ivory/white

2 WINDOWS - COFFEE TABLE - BAROQUE

Tavolino contenitore con vassoi estraibili - Coffee table container removable tray

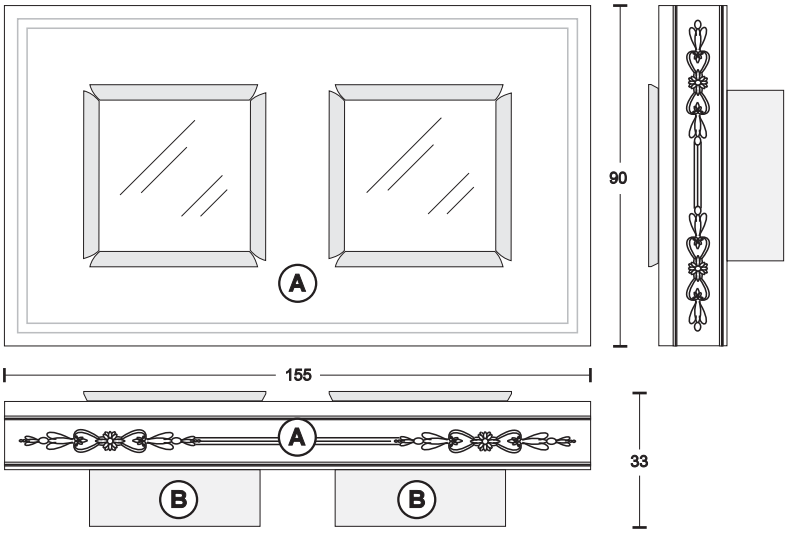

(A) Tutti laccati opachi - decori oro/argento foglia - vassoi in vetro temperato - maniglie oro/argento foglia € 5.211,80
All opaque laquering - decoration gold/silver foil - Ardened Glass Trays - handles gold/silver foil
(B) tutti i laccati opachi-All opaque laquering

(A) Bianco/Nero lucido - decori oro/argento foglia - vassoi in vetro temperato - maniglie oro/argento foglia € 5.844,30
Gloss White or Black - decoration gold/silver foil - Ardened Glass Trays - handles gold/silver foil
(B) tutti i laccati opachi-All opaque laquering

(A) Cracklè avorio+decorazioni oro/argento foglia-vassoio in vetro temperato, maniglie oro/argento € 5.338,30
Ivory cracklè+gold/silver foil decoration-Ardened grass trays+gold/silver foil handles
(B) Avorio-Ivory

(A) Oro/argento foglia+patina avorio/bianco-decori oro/argento foglia-vassoi in vetro temperato,maniglie decori oro/argento foglia € 5.275,60
Gold/silver+Ivory/white patina-decoration gold/silver foil - Ardened Glass Trays-handles Gold/Silverfoil
(B) Avorio/bianco-Ivory/white

4 WINDOWS - COFFEE TABLE - BAROQUE

Tavolino contenitore con vassoi estraibili - Coffee table container removable tray

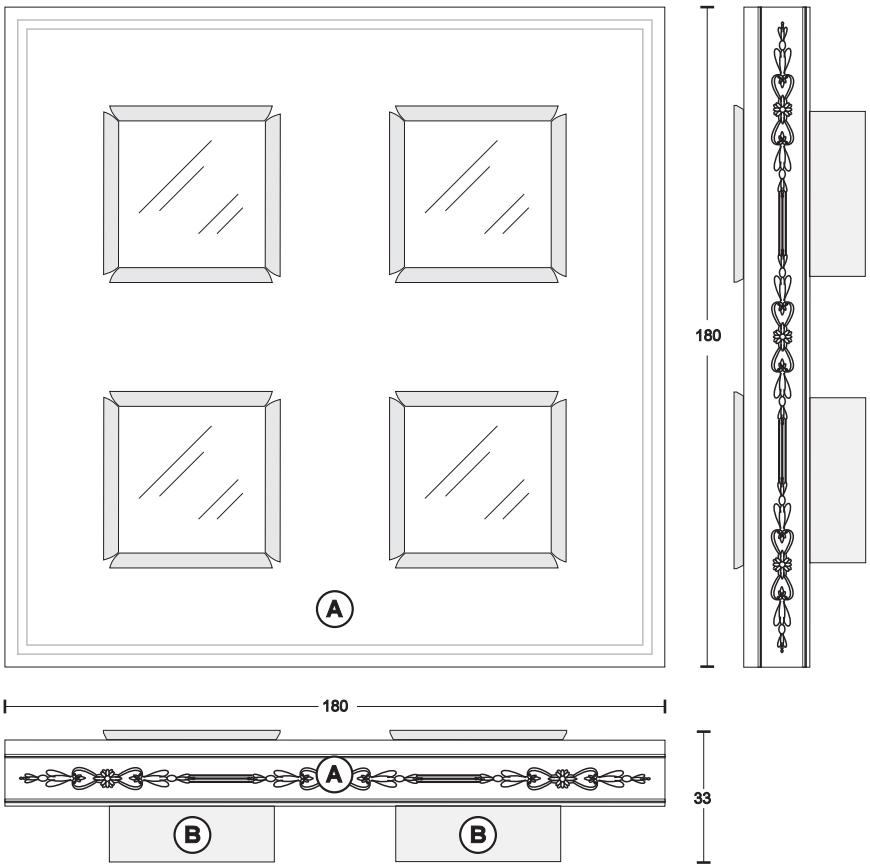

(A) tutti i laccati opachi,
decori oro/argento foglia-vassoi in vetro temperato,
maniglie oro/argento foglia
All opaque laquering,
decoration gold/silver foil - Ardened Glass Trays
handles gold/silver foil

(B) tutti i laccati opachi-All opaque laquering
€ 9.223,50

(A) Bianco/Nero lucido
decori oro/argento foglia-vassoi in vetro temperato,
maniglie decori oro/argento foglia
Gloss White or Black,
decoration gold/silver foil - Ardened Glass Trays
handles Gold/Silverfoil

(B) tutti i laccati opachi-All opaque laquering
€ 10.233,30

(A) Cracklè avorio+decorazioni oro/argento foglia
vassoio in vetro temperato, maniglie oro/argento
Ivory cracklè+gold/silver foil decoration
Ardened grass trays+gold/silver foil handles

(B) Avorio-Ivory
€ 9.474,30

(A) Oro/argento foglia+patina avorio/bianco
decori oro/argento foglia-vassoi in vetro temperato,
maniglie decori oro/argento foglia
Gold/silver+Ivory/white patina
decoration gold/silver foil - Ardened Glass Trays
handles Gold/Silverfoil

(B) Avorio/bianco-Ivory/white
€ 9.348,90

3 WINDOWS - COFFEE TABLE - BAROQUE

Tavolino contenitore con vassoi estraibili - Coffee table container removable tray

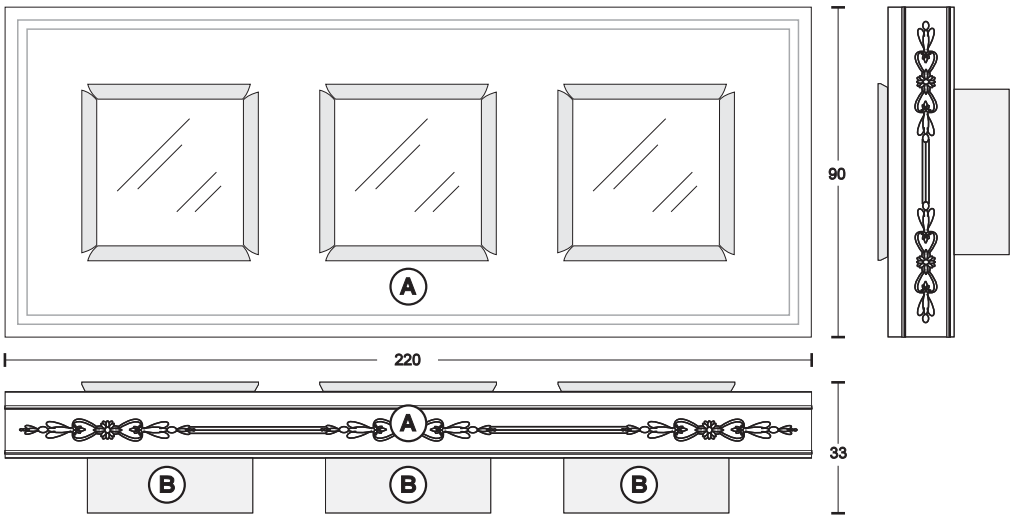

(A) Tutti laccati opachi - decori oro/argento foglia - vassoi in vetro temperato - maniglie oro/argento foglia — € 7.309,50
All opaque laquering - decoration gold/silver foil - Ardened Glass Trays - handles gold/silver foil
(B) tutti i laccati opachi-All opaque laquering

(A) Bianco/Nero lucido - decori oro/argento foglia - vassoi in vetro temperato - maniglie oro/argento foglia — € 8.134,50
Gloss White or Black - decoration gold/silver foil - Ardened Glass Trays - handles gold/silver foil
(B) tutti i laccati opachi-All opaque laquering

(A) Cracklè avorio+decorazioni oro/argento foglia-vassoio in vetro temperato, maniglie oro/argento — € 7.488,80
Ivory cracklè+gold/silver foil decoration-Ardened grass trays+gold/silver foil handles
(B) Avorio-Ivory

(A) Oro/argento foglia+patina avorio/bianco-decori oro/argento foglia-vassoi in vetro temperato,maniglie decori oro/argento foglia — € 7.406,30
Gold/silver+Ivory/white patina-decoration gold/silver foil - Ardened Glass Trays-handles Gold/Silverfoil
(B) Avorio/bianco-Ivory/white

FLOWER 60 - BAROQUE

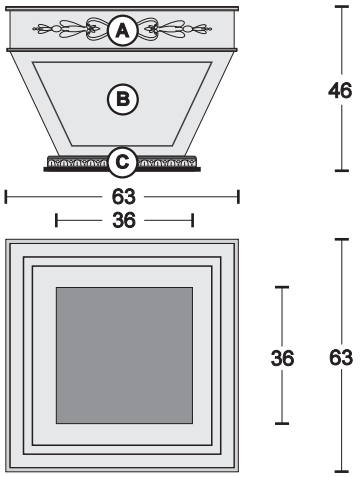

Finiture - finishings

(A) oro/argento foglia(gold/silver foil) — € 2.302,30
decorazioni-decorations:Nero(Black)-Crema (Cream)-Bianco(white)

(B) Metalblack-Crema(Cream)-Bianco(white)
decorazioni-decorations:oro/argento foglia(gold/silver foil)

(C) Metalblack-Crema(Cream)-Bianco(white)
decorazioni-decorations:oro/argento foglia(gold/silver foil)

(A)+(C) Nero Lucido/Bianco Lucido(Gloss black/White) — € 2.454,10
(B) Nero(Black)+decorazioni(decorations):argento foglia(silver foil)

(A) Cracklè avorio+decorazioni oro/argento foglia — € 2.346,30
(Ivory cracklè+gold/silver foil decorations)

(B) Avorio+decorazioni oro/argento foglia
(Ivory+gold/silver foil decorations)

(C) Cracklè avorio+decorazioni oro/argento foglia
(Ivory cracklè+gold/silver foil decorations)

Completo di vasca metallica zincata-including galvanized metal tank

VASE 90 - BAROQUE

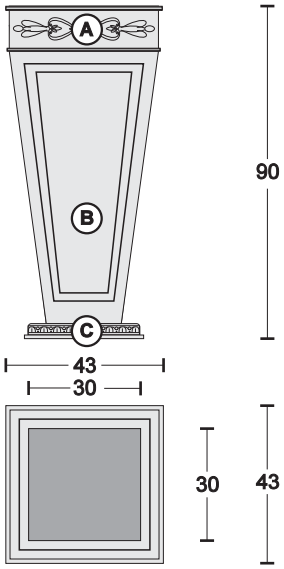

Finiture - finishings

(A) oro/argento foglia(gold/silver foil) — € 2.136,20
decorazioni-decorations:Nero(Black)-Crema (Cream)-Bianco(white)

(B) Metalblack-Crema(Cream)-Bianco(white)
decorazioni-decorations:oro/argento foglia(gold/silver foil)

(C) Metalblack-Crema(Cream)-Bianco(white)
decorazioni-decorations:oro/argento foglia(gold/silver foil)

(A)+(C) Nero Lucido/Bianco Lucido(Gloss black/White) — € 2.288,00
(B) Nero(Black)+decorazioni(decorations):argento foglia(silver foil)

(A) Cracklè avorio+decorazioni oro/argento foglia — € 2.180,20
(Ivory cracklè+gold/silver foil decorations)

(B) Avorio+decorazioni oro/argento foglia
(Ivory+gold/silver foil decorations)

(C) Cracklè avorio+decorazioni oro/argento foglia
(Ivory cracklè+gold/silver foil decorations)

Completo di vasca metallica zincata oppure chiusura top per colonna
including galvanized metal tank or top as column

VASE 125 - BAROQUE

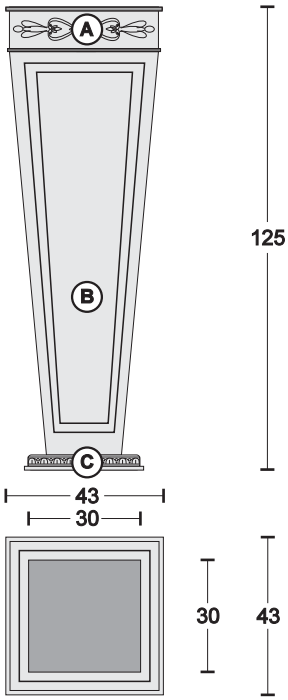

Finiture - finishings

(A) oro/argento foglia(gold/silver foil) — € 2.288,00
decorazioni-decorations:Nero(Black)-Crema (Cream)-Bianco(white)

(B) Metalblack-Crema(Cream)-Bianco(white)
decorazioni-decorations:oro/argento foglia(gold/silver foil)

(C) Metalblack-Crema(Cream)-Bianco(white)
decorazioni-decorations:oro/argento foglia(gold/silver foil)

(A)+(C) Nero Lucido/Bianco Lucido(Gloss black/White) — € 2.442,00
(B) Nero(Black)+decorazioni(decorations):argento foglia(silver foil)

(A) Cracklè avorio+decorazioni oro/argento foglia — € 2.332,00
(Ivory cracklè+gold/silver foil decorations)

(B) Avorio+decorazioni oro/argento foglia
(Ivory+gold/silver foil decorations)

(C) Cracklè avorio+decorazioni oro/argento foglia
(Ivory cracklè+gold/silver foil decorations)

Completo di vasca metallica zincata oppure chiusura top per colonna
including galvanized metal tank or top as column

FLOWER 60 - BRAZIER - BAROQUE

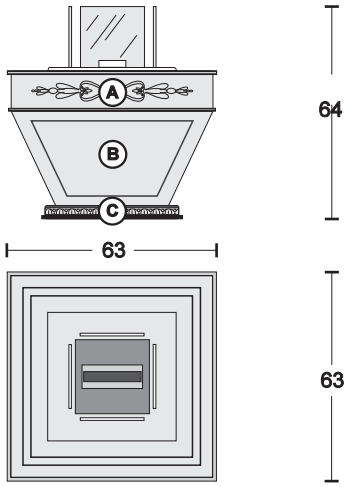

Finiture - finishings

(A) oro/argento foglia(gold/silver foil) — € 3.837,90
decorazioni-decorations:Nero(Black)-Crema (Cream)-Bianco(white)

(B) Metalblack-Crema(Cream)-Bianco(white)
decorazioni-decorations:oro/argento foglia(gold/silver foil)

(C) Metalblack-Crema(Cream)-Bianco(white)
decorazioni-decorations:oro/argento foglia(gold/silver foil)

(A)+(C) Nero Lucido/Bianco Lucido(Gloss black/White) — € 3.982,00
(B) Nero(Black)+decorazioni(decorations):argento foglia(silver foil)

(A) Cracklè avorio+decorazioni oro/argento foglia — € 3.881,90
(Ivory cracklè+gold/silver foil decorations)

(B) Avorio+decorazioni oro/argento foglia
(Ivory+gold/silver foil decorations)

(C) Cracklè avorio+decorazioni oro/argento foglia
(Ivory cracklè+gold/silver foil decorations)

Con braciere a bio-alcol removibile e vetri temperati-Complete of bio-alcohol bazier and tempered glass

VASE 90 - BRAZIER - BAROQUE

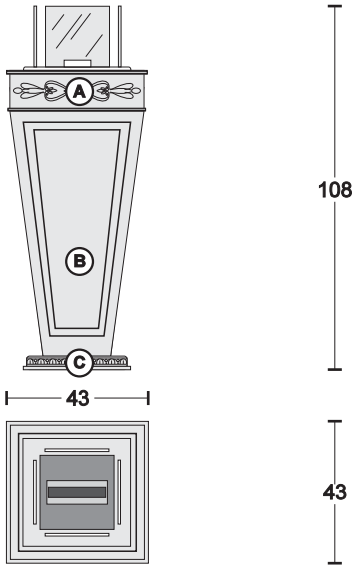

Finiture - finishings

(A) oro/argento foglia(gold/silver foil) — € 3.678,40
decorazioni-decorations:Nero(Black)-Crema (Cream)-Bianco(white)

(B) Metalblack-Crema(Cream)-Bianco(white)
decorazioni-decorations:oro/argento foglia(gold/silver foil)

(C) Metalblack-Crema(Cream)-Bianco(white)
decorazioni-decorations:oro/argento foglia(gold/silver foil)

(A)+(C) Nero Lucido/Bianco Lucido(Gloss black/White) — € 3.822,50
(B) Nero(Black)+decorazioni(decorations):argento foglia(silver foil)

(A) Cracklè avorio+decorazioni oro/argento foglia — € 3.722,40
(Ivory cracklè+gold/silver foil decorations)

(B) Avorio+decorazioni oro/argento foglia
(Ivory+gold/silver foil decorations)

(C) Cracklè avorio+decorazioni oro/argento foglia
(Ivory cracklè+gold/silver foil decorations)

Con braciere a bio-alcol removibile e vetri temperati-Complete of bio-alcohol bazier and tempered glass

VASE 125 - BRAZIER - BAROQUE

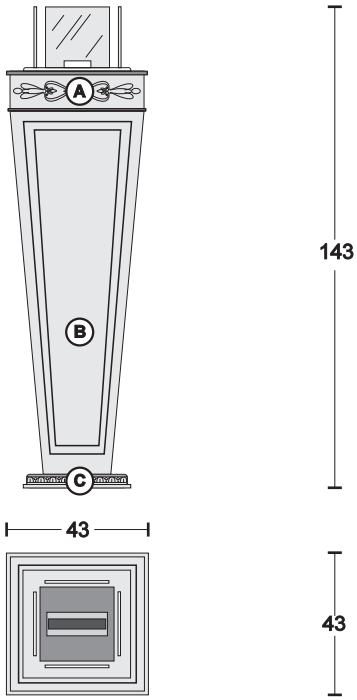

Finiture - finishings

(A) oro/argento foglia(gold/silver foil) — € 3.822,50
decorazioni-decorations:Nero(Black)-Crema (Cream)-Bianco(white)

(B) Metalblack-Crema(Cream)-Bianco(white)
decorazioni-decorations:oro/argento foglia(gold/silver foil)

(C) Metalblack-Crema(Cream)-Bianco(white)
decorazioni-decorations:oro/argento foglia(gold/silver foil)

(A)+(C) Nero Lucido/Bianco Lucido(Gloss black/White) — € 3.969,90
(B) Nero(Black)+decorazioni(decorations):argento foglia(silver foil)

(A) Cracklè avorio+decorazioni oro/argento foglia — € 3.866,50
(Ivory cracklè+gold/silver foil decorations)

(B) Avorio+decorazioni oro/argento foglia
(Ivory+gold/silver foil decorations)

(C) Cracklè avorio+decorazioni oro/argento foglia
(Ivory cracklè+gold/silver foil decorations)

Con braciere a bio-alcol removibile e vetri temperati-Complete of bio-alcohol bazier and tempered glass

CHEST-NOUVEAU-282 BAROQUE DIVANO - SOFA

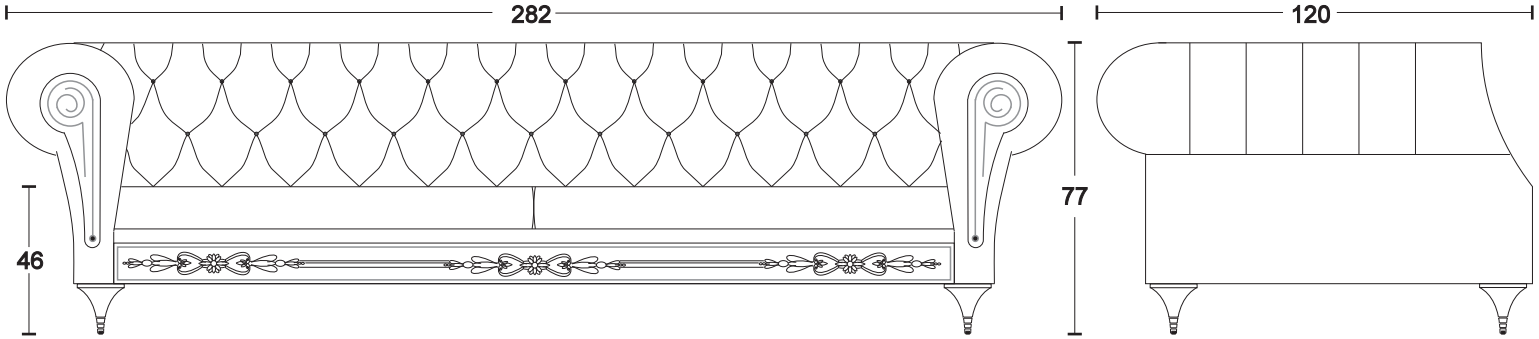

Pelle-Leather cat."SOFT"	Pelle-Leather cat."EXTRA"	Pelle-Leather cat."GLAM"
€ 13.854,50	€ 15.042,50	€ 16.544,00
Eco Nabuk Eco Nubuk	Velluto Velvet	
€ 11.789,80	€ 13.226,40	

CHEST-NOUVEAU-209 BAROQUE DIVANO - SOFA

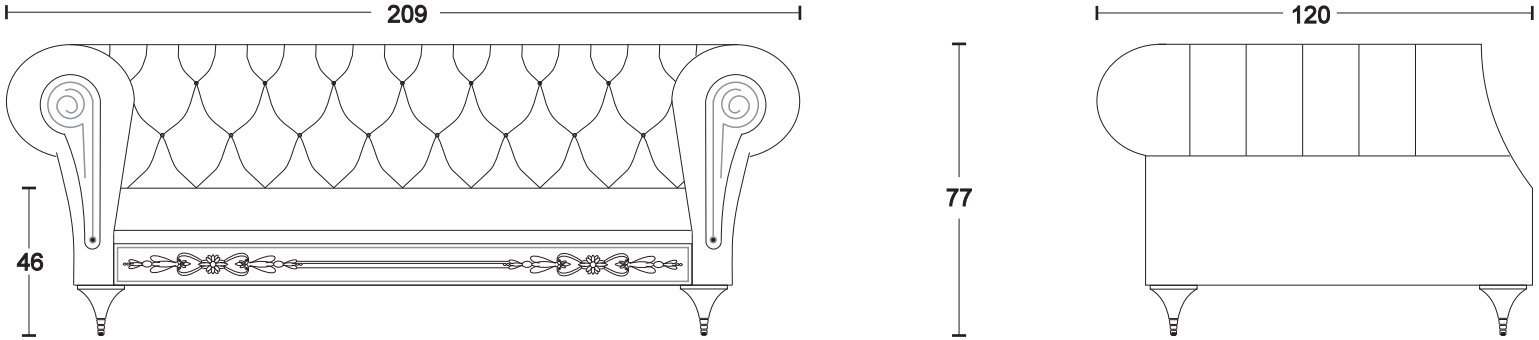

Pelle-Leather cat."SOFT"	Pelle-Leather cat."EXTRA"	Pelle-Leather cat."GLAM"
€ 10.978,00	€ 12.083,50	€ 13.183,50
Eco Nabuk Eco Nubuk	Velluto Velvet	
€ 9.614,00	€ 10.666,70	

CHEST-NOUVEAU-123 BAROQUE POLTRONA - ARMCHAIR

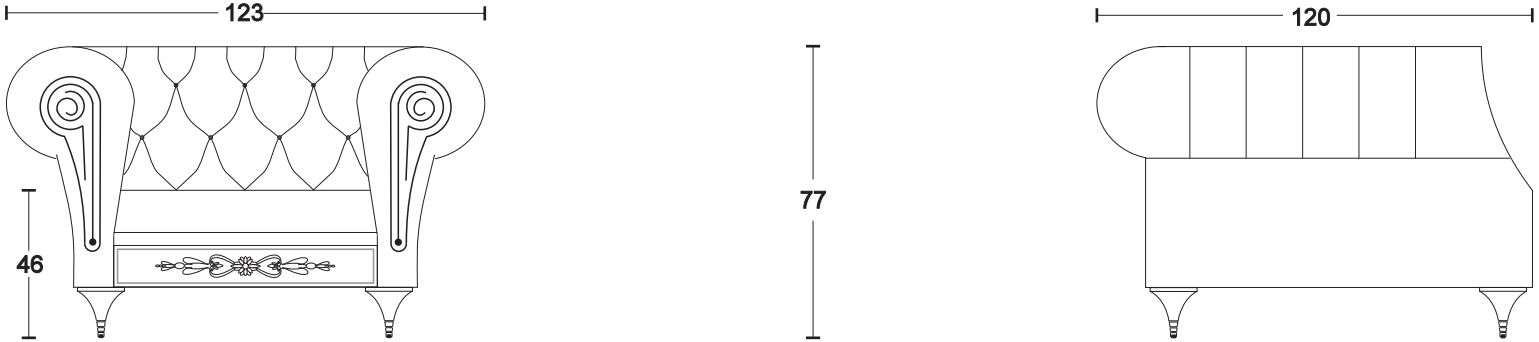

Pelle-Leather cat."SOFT"	Pelle-Leather cat."EXTRA"	Pelle-Leather cat."GLAM"
€ 9.295,00	€ 10.109,00	€ 11.044,00
Eco Nabuk Eco Nubuk	Velluto Velvet	
€ 7.451,40	€ 8.368,80	

CHEST NOUVEAU - BAROQUE

CHAISE LOUNGE - DX

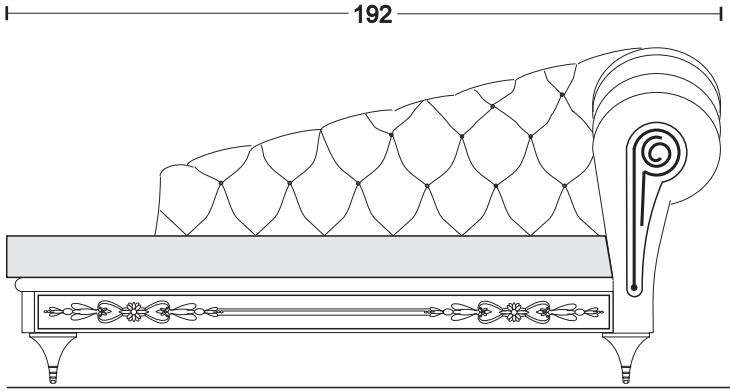

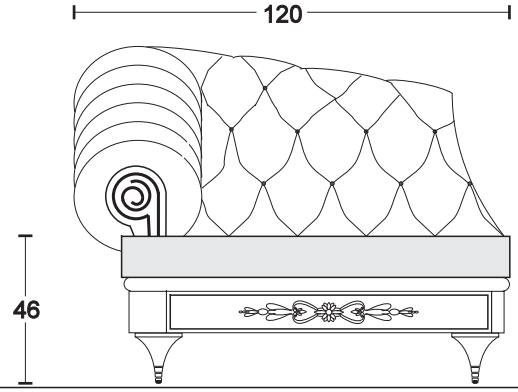

Pelle-Leather cat."SOFT"	Pelle-Leather cat."EXTRA"	Pelle-Leather cat."GLAM"
€ 10.961,50	€ 12.056,00	€ 13.145,00
Eco Nabuk Eco Nubuk	Velluto Velvet	
€ 8.785,70	€ 9.887,90	

CHEST NOUVEAU - BAROQUE

CHAISE LOUNGE - SX

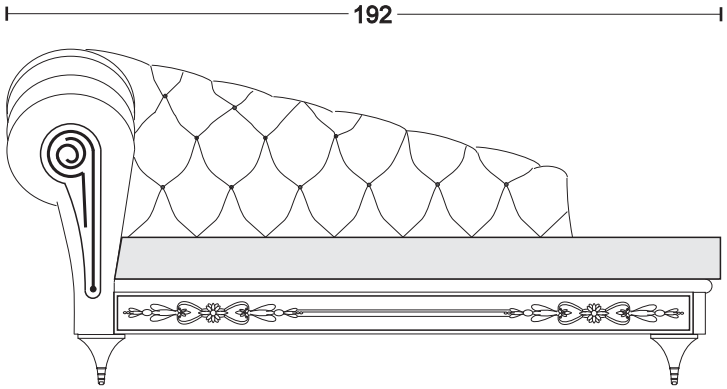

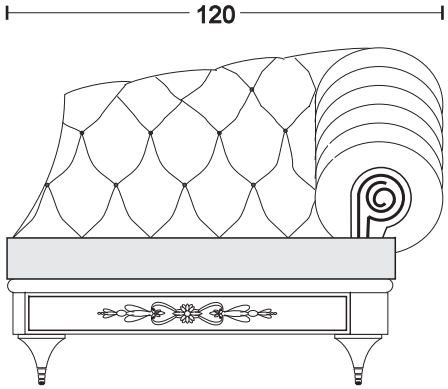

Pelle-Leather cat."SOFT"	Pelle-Leather cat."EXTRA"	Pelle-Leather cat."GLAM"
€ 10.961,50	€ 12.056,00	€ 13.145,00
Eco Nabuk Eco Nubuk	Velluto Velvet	
€ 8.785,70	€ 9.887,90	

CHEST NOUVEAU

Pelle Leather cat.SOFT	Pelle Leather cat.EXTRA	Pelle Leather cat.GLAM	Eco Nabuk Eco Nubuk	Velluto Velvet
€ 495,00	€ 583,00	€ 676,50	€ 284,90	€ 367,40

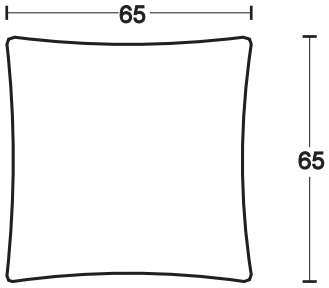

EXTRA CUSCINO - EXTRA CUSCION 65-55-45

Pelle Leather cat.SOFT	Pelle Leather cat.EXTRA	Pelle Leather cat.GLAM	Eco Nabuk Eco Nubuk	Velluto Velvet
€ 456,50	€ 533,50	€ 632,50	€ 266,20	€ 335,50

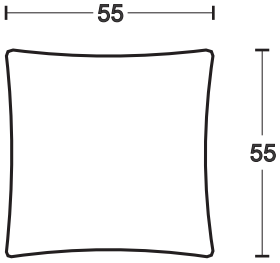

Pelle Leather cat.SOFT	Pelle Leather cat.EXTRA	Pelle Leather cat.GLAM	Eco Nabuk Eco Nubuk	Velluto Velvet
€ 412,50	€ 484,00	€ 561,00	€ 242,00	€ 303,60

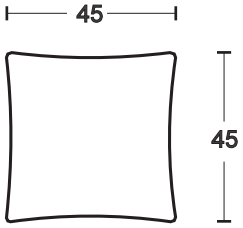

CONFORT-NOUVEAU-264 BAROQUE DIVANO - SOFA

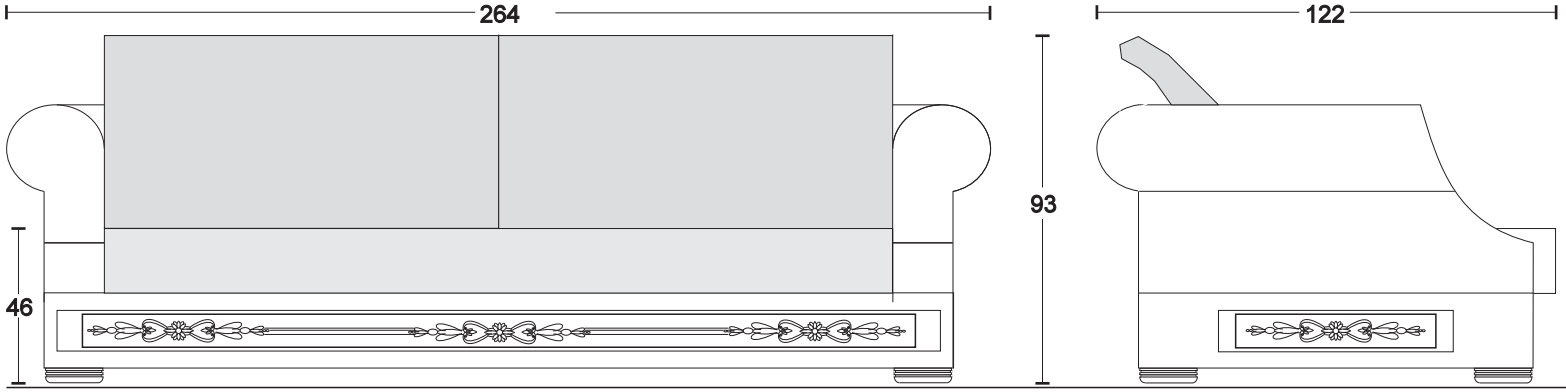

Pelle-Leather cat."SOFT"	Pelle-Leather cat."EXTRA"	Pelle-Leather cat."GLAM"
€ 11.247,50	€ 12.485,00	€ 13.827,00
Eco Nabuk Eco Nubuk	Velluto Velvet	
€ 8.640,50	€ 10.101,30	

CONFORT-NOUVEAU-193 BAROQUE DIVANO - SOFA

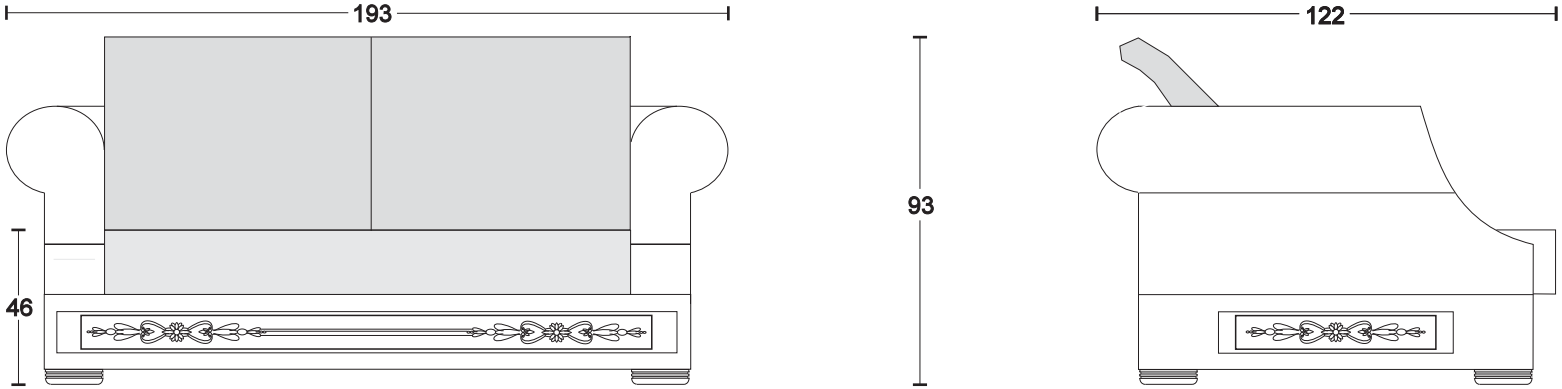

Pelle-Leather cat."SOFT"	Pelle-Leather cat."EXTRA"	Pelle-Leather cat."GLAM"
€ 9.729,50	€ 10.422,50	€ 11.612,70
Eco Nabuk Eco Nubuk	Velluto Velvet	
€ 7.261,10	€ 8.537,10	

CONFORT-NOUVEAU-125 BAROQUE POLTRONA - ARMCHAIR

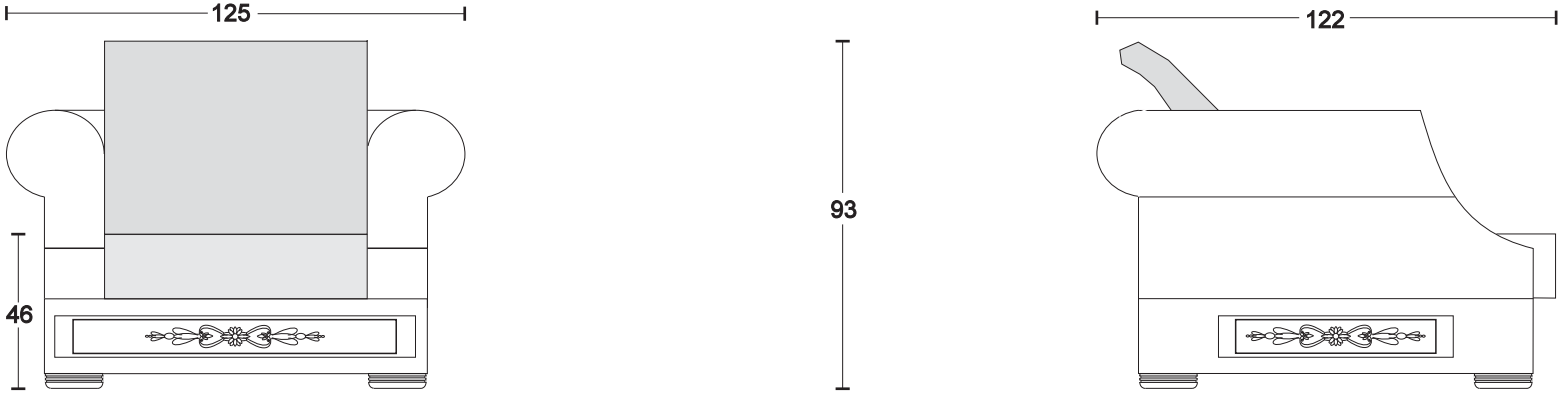

Pelle-Leather cat."SOFT"	Pelle-Leather cat."EXTRA"	Pelle-Leather cat."GLAM"
€ 7.095,00	€ 7.854,00	€ 8.640,50
Eco Nabuk Eco Nubuk	Velluto Velvet	
€ 5.566,00	€ 6.483,40	

CONFORT-NOUVEAU-264 LUMBAR CUSHION BAROQUE — DIVANO - SOFA

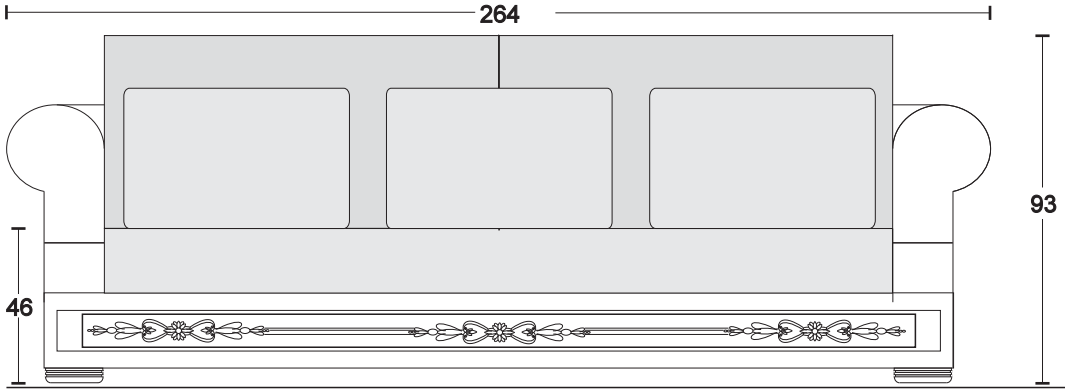

Pelle-Leather cat."SOFT"	Pelle-Leather cat."EXTRA"	Pelle-Leather cat."GLAM"
€ 12.386,00	€ 13.816,00	€ 15.345,00
Eco Nabuk Eco Nubuk	Velluto Velvet	
€ 9.399,50	€ 11.037,40	

CONFORT-NOUVEAU-193 LUMBAR CUSHION BAROQUE — DIVANO - SOFA

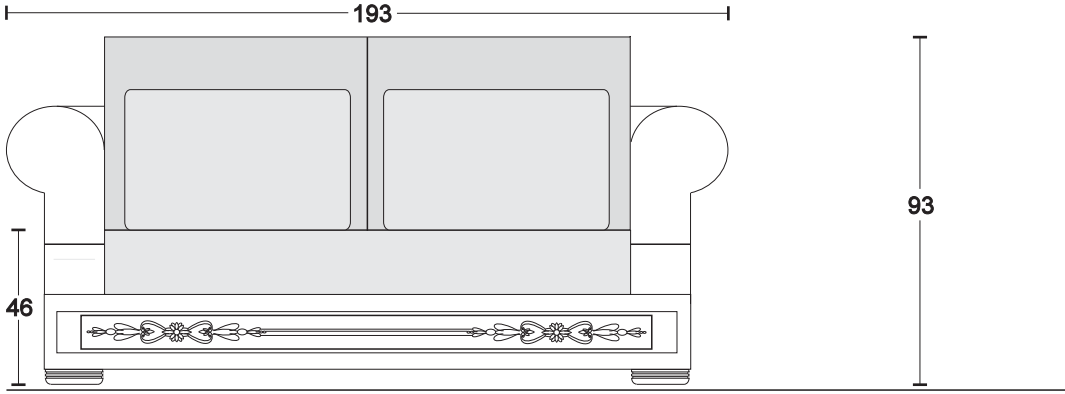

Pelle-Leather cat."SOFT"	Pelle-Leather cat."EXTRA"	Pelle-Leather cat."GLAM"
€ 10.488,50	€ 11.308,00	€ 12.624,70
Eco Nabuk Eco Nubuk	Velluto Velvet	
€ 7.906,80	€ 9.156,40	

CONFORT-NOUVEAU-125 LUMBAR CUSHION BAROQUE — POLTRONA - ARMCHAIR

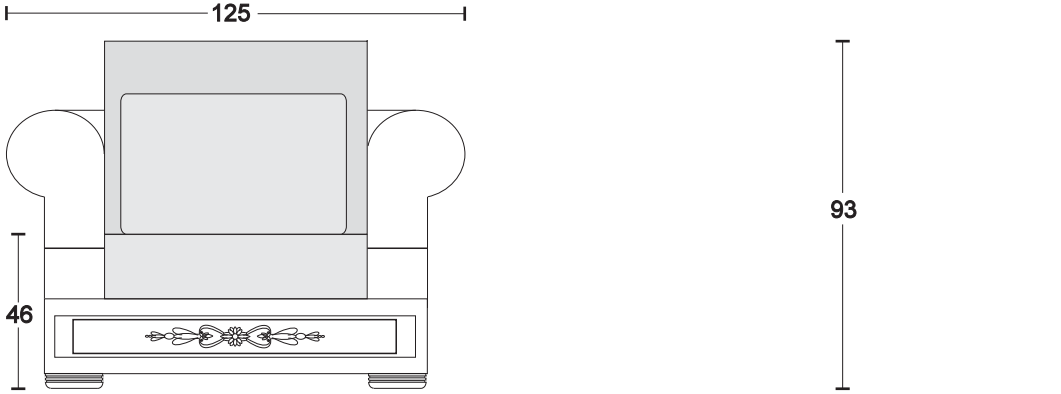

Pelle-Leather cat."SOFT"	Pelle-Leather cat."EXTRA"	Pelle-Leather cat."GLAM"
€ 7.474,50	€ 8.299,50	€ 9.146,50
Eco Nabuk Eco Nubuk	Velluto Velvet	
€ 5.819,00	€ 6.793,60	

CONFORT NOUVEAU- BAROQUE — CHAISE LOUNGE - DX

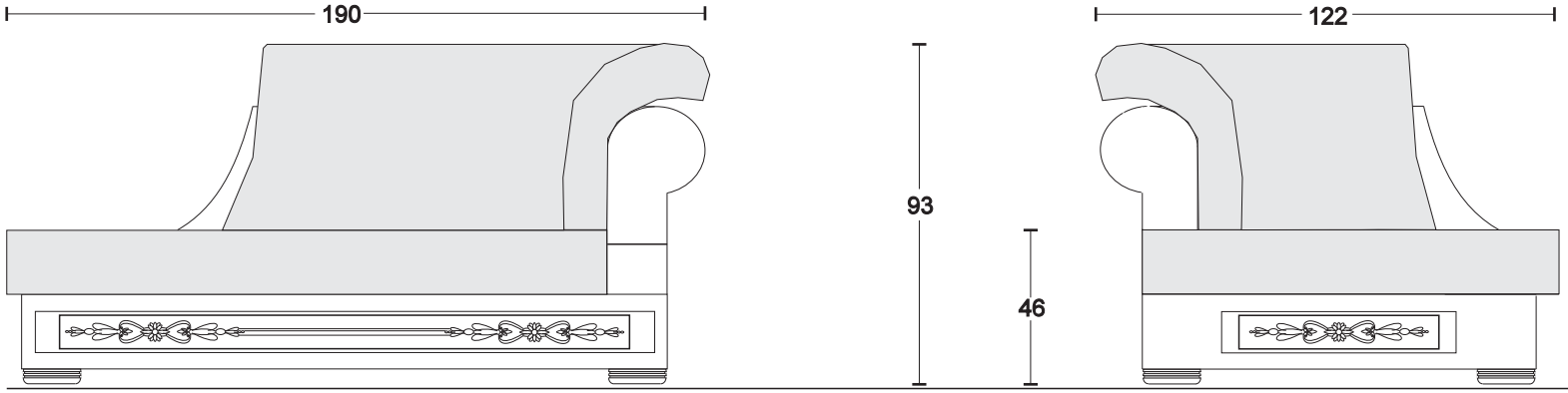

Pelle-Leather cat."SOFT"	Pelle-Leather cat."EXTRA"	Pelle-Leather cat."GLAM"
€ 9.713,00	€ 10.312,50	€ 11.269,50
Eco Nabuk Eco Nubuk	Velluto Velvet	
€ 7.564,70	€ 8.668,00	

CONFORT NOUVEAU- BAROQUE — CHAISE LOUNGE - SX

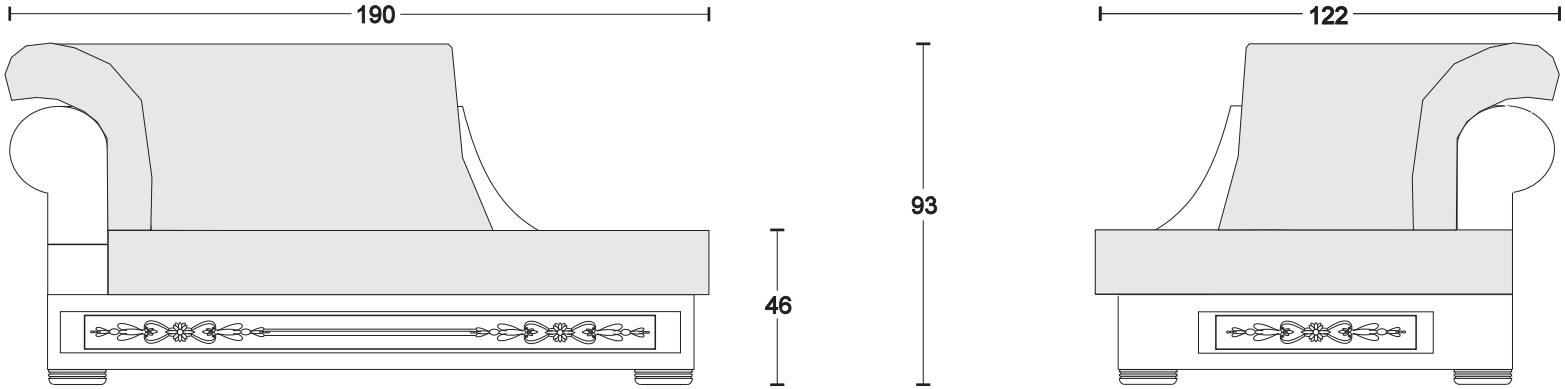

Pelle-Leather cat."SOFT"	Pelle-Leather cat."EXTRA"	Pelle-Leather cat."GLAM"
€ 9.713,00	€ 10.312,50	€ 11.269,50
Eco Nabuk Eco Nubuk	Velluto Velvet	
€ 7.564,70	€ 8.668,00	

CONFORT NOUVEAU — EXTRA CUSCINO - EXTRA CUSCION 65-55-45

Pelle Leather cat.SOFT	Pelle Leather cat.EXTRA	Pelle Leather cat.GLAM	Eco Nabuk Eco Nubuk	Velluto Velvet
€ 495,00	€ 583,00	€ 676,50	€ 284,90	€ 367,40

Pelle Leather cat.SOFT	Pelle Leather cat.EXTRA	Pelle Leather cat.GLAM	Eco Nabuk Eco Nubuk	Velluto Velvet
€ 456,50	€ 533,50	€ 632,50	€ 266,20	€ 335,50

Pelle Leather cat.SOFT	Pelle Leather cat.EXTRA	Pelle Leather cat.GLAM	Eco Nabuk Eco Nubuk	Velluto Velvet
€ 412,50	€ 484,00	€ 561,00	€ 242,00	€ 303,60

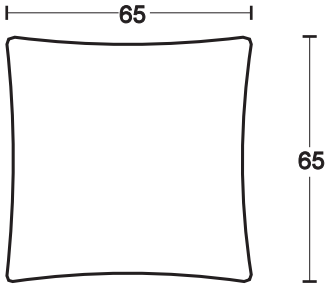

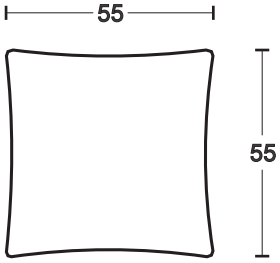

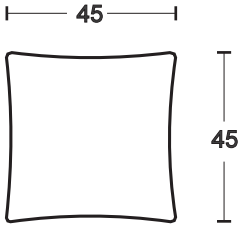

PLAY ROOM - POOL TABLE 10-12 FEET - BAROQUE

10 piedi dimensioni campo gioco cm. 284 x 142 - Dimensioni esterne cm. 320 x 178 - Russo H. 80; Snooker inglese H. 80; Americano H. 78
10 Feet playng fiel dimention cm. 284 x 142 - External dimention cm. 320 x 178 - Russian H. 80; English Snooker H. 80; American H. 78
Con piano in ardesia 40 mm - With playground stone slate 40 mm

12 piedi dimensioni campo gioco cm. 355 x 177 - Dimensioni esterne cm. 391 x 213 - Russo H. 80; Snooker inglese H. 80; Americano H. 78
12 Feet playng fiel dimention cm. 355 x 177 - External dimention cm. 391 x 213 - Russian H. 80; English Snooker H. 80; American H. 78
Con piano in ardesia 40 mm - With playground stone slate 40 mm

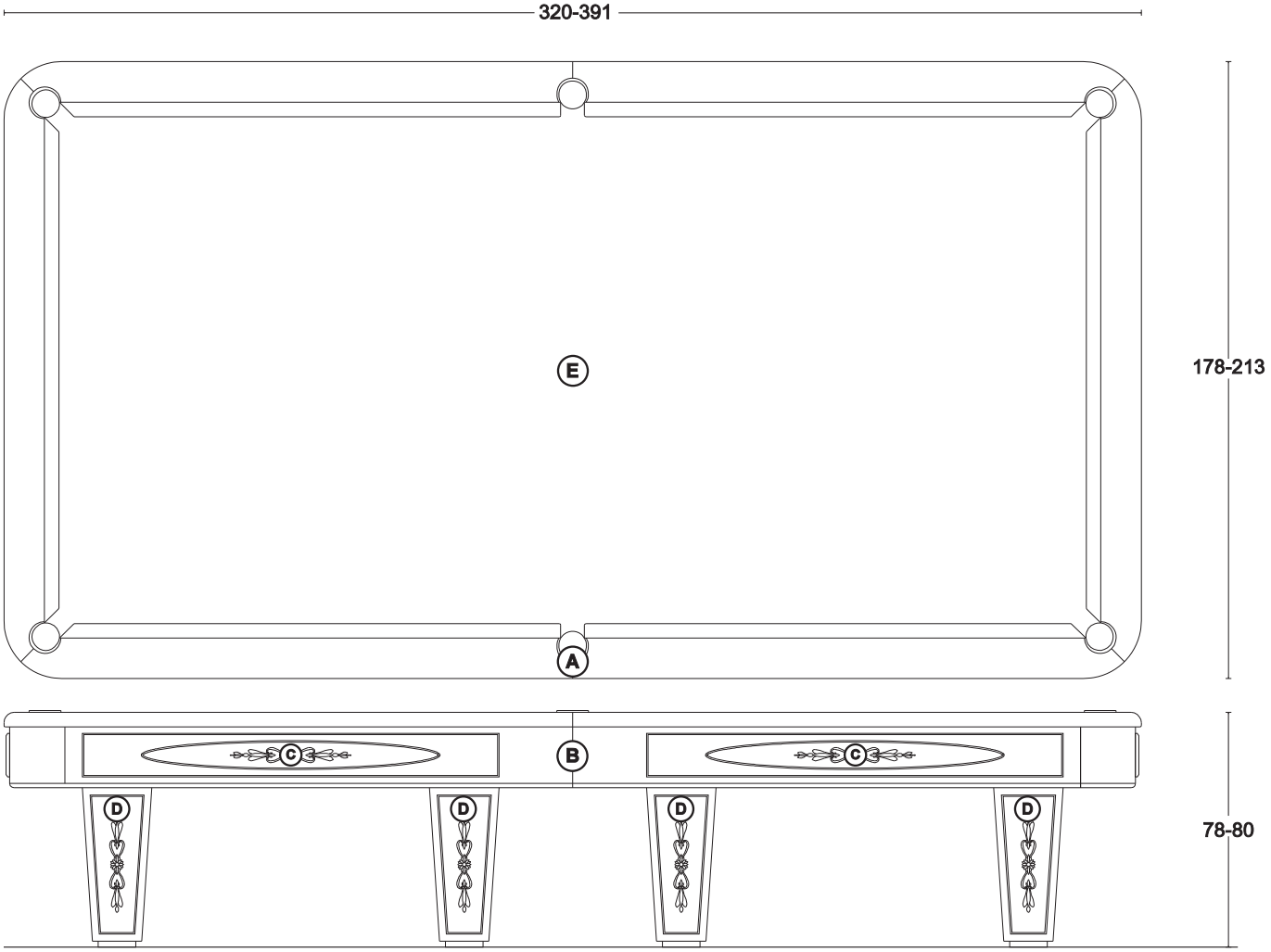

A+B+D Tutti i Laccato opaco / All Opaque laquered — D Decorazioni: Oro/Argento foglia / D Decoration: Gold/Silver foil

C Inserti: Tutte le combinazioni di oro/argento foglia con tutti i laccati
Insert: Gold/Silver foil combined with all laquered

E Tappeto biliardo colori diversi - Pool table cloth different colours

10 PIEDI-10 FEET € 63.250,00
12 PIEDI-12 FEET € 75.141,00

A+B+D Tutti i Laccato lucido / All Glossy laquered — D Decorazioni: Oro/Argento foglia / D Decoration: Gold/Silver foil

C Inserti: Tutte le combinazioni con oro/argento foglia con laccati
Insert: Gold/Silver foil combined with all laquered

E Tappeto biliardo colori diversi - Pool table cloth different colours

10 PIEDI-10 FEET € 64.388,50
12 PIEDI-12 FEET € 76.279,50

PLAY ROOM - POOL LAMP 10-12 FEET - BAROQUE

Lampada a LED per biliardo da 10-12 piedi - 170 Watt - peso kg. 85
LED Lamp for Pool 10-12 Feet - 170 Watt - Weight Kg. 85

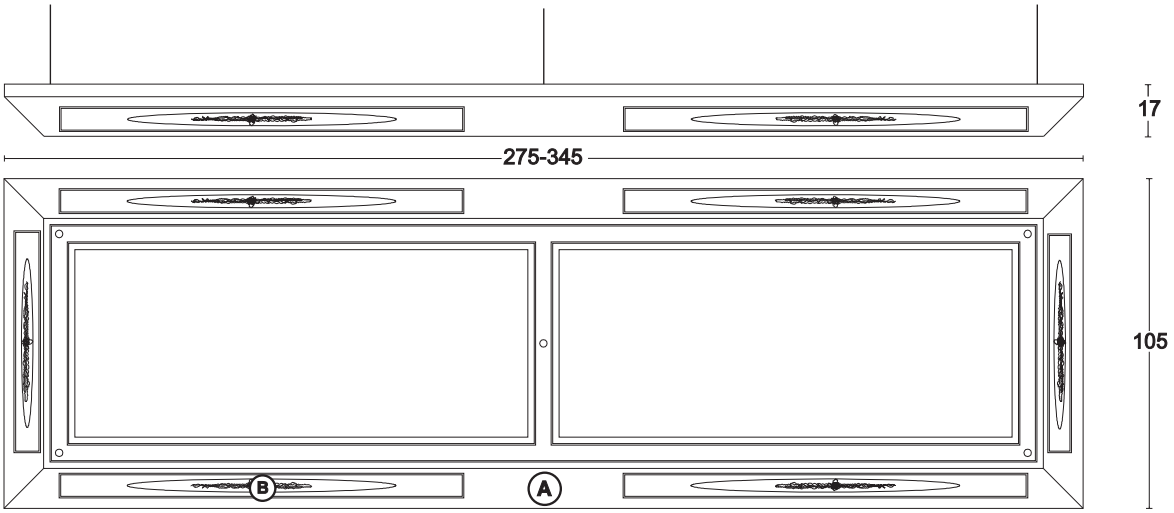

(A) Tutti i Laccato opaco - All Opaque laquered **€ 11.511,50**

(B) Inserti: Tutte le combinazioni di oro/argento foglia con tutti i laccati
Insert: Gold/Silver foil combined with all laquered

(A) Tutti i Laccato lucido - All Glossy laquered **€ 12.523,50**

(B) Inserti: Tutte le combinazioni con oro/argento foglia con laccati
Insert: Gold/Silver foil combined with all laquered

CUE RACK-BODY-R - BAROQUE

Porta stecche per biliardo da 10-12 piedi con orologio al quarzo
Pool Cue Rack for 10-12 Feet with quarz clock

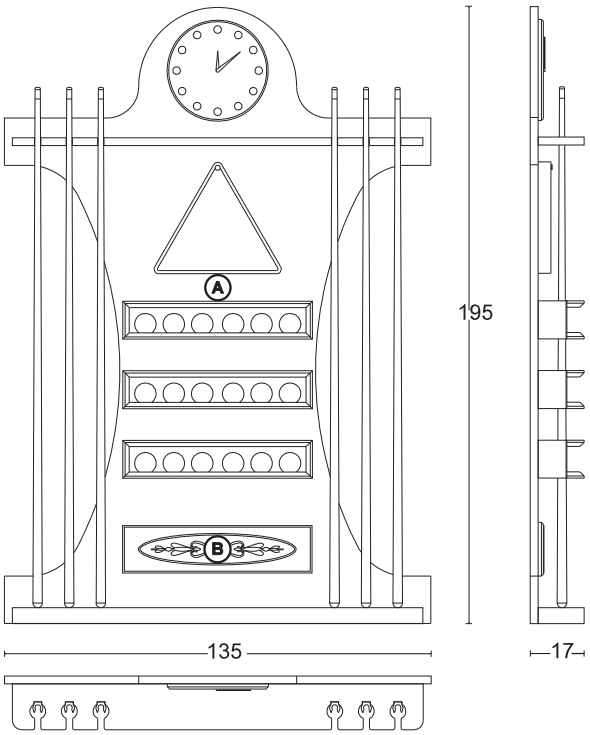

(A) Tutti i Laccato opaco - All Opaque laquered **€ 5.250,30**

(B) Inserti: Tutte le combinazioni di oro/argento foglia con tutti i laccati
Insert: Gold/Silver foil combined with all laquered

(A) Tutti i Laccato lucido - All Glossy laquered **€ 6.009,30**

(B) Inserti: Tutte le combinazioni di oro/argento foglia con tutti i laccati
Insert: Gold/Silver foil combined with all laquered

- stecche in legno L.-Standard - da cm.160 (set 6 pezzi) - wooden Pool cue L.-Standard - cm. 160 (set 6 pieces) **€ 2.428,80**
- Set biglie Ø 52,4 mm. Snooker inglese - Ø 57mm. per Pool americano - Ø 68 mm per Piramide russa **€ 607,20**
  Set balls Ø 52,4 mm. english Snooker - Ø 57mm. American Pool - Ø 68 mm Russian Piramid

PLAY ROOM - POOL TABLE 8-9 FEET - BAROQUE

8 piedi dimensioni campo gioco cm. 224 x 112 - Dimensioni esterne cm. 260 x 148 - Russo H. 80; Snooker inglese H. 80; Americano H. 78
8 Feet playng fiel dimention cm. 224 x 112 - External dimention cm. 260 x 148 - Russian H. 80; English Snooker H. 80; American H. 78
Con piano in ardesia 25 mm - With playground stone slate 25 mm

9 piedi dimensioni campo gioco cm. 254 x 112 - Dimensioni esterne cm. 290 x 163 - Russo H. 80; Snooker inglese H. 80; Americano H. 78
9 Feet playng fiel dimention cm. 254 x 127 - External dimention cm. 290 x 163 - Russian H. 80; English Snooker H. 80; American H. 78
Con piano in ardesia 25 mm - With playground stone slate 25 mm

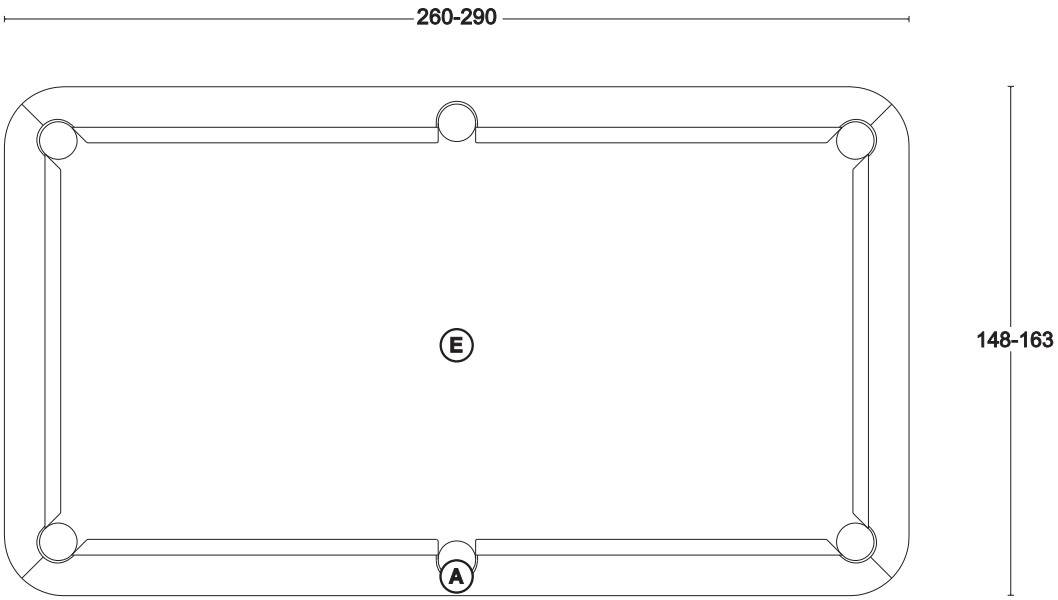

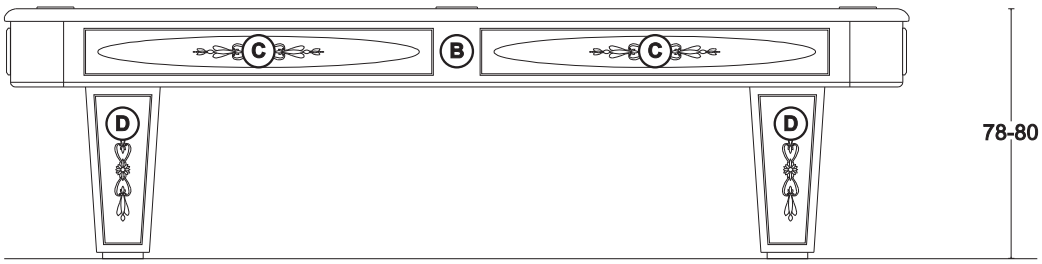

A+B+D Tutti i Laccato opaco / All Opaque laquered — D Decorazioni: Oro/Argento foglia / D Decoration: Gold/Silver foil

C Inserti: Tutte le combinazioni di oro/argento foglia con tutti i laccati
Insert: Gold/Silver foil combined with all laquered

E Tappeto biliardo colori diversi - Pool table cloth different colours

8 PIEDI-8 FEET € 43.389,50
9 PIEDI-9 FEET € 43.389,50

A+B+D Tutti i Laccato lucido / All Glossy laquered — D Decorazioni: Oro/Argento foglia / D Decoration: Gold/Silver foil

C Inserti: Tutte le combinazioni con oro/argento foglia con laccati
Insert: Gold/Silver foil combined with all laquered

E Tappeto biliardo colori diversi - Pool table cloth different colours

8 PIEDI-8 FEET € 44.401,50
9 PIEDI-9 FEET € 44.401,50

PLAY ROOM - POOL LAMP 8-9 FEET - BAROQUE

Lampada a LED per biliardo da 8-9 piedi - 130 Watt - peso kg. 70
LED Lamp for Pool 8-9 Feet - 130 Watt - Weight Kg. 70

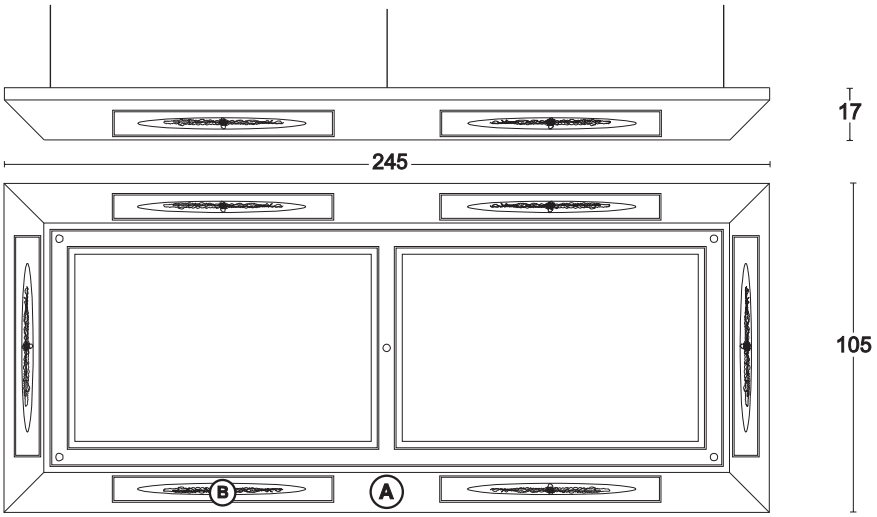

(A) Tutti i Laccato opaco - All Opaque laquered **€ 9.614,00**

(B) Inserti: Tutte le combinazioni di oro/argento foglia con tutti i laccati
Insert: Gold/Silver foil combined with all laquered

(A) Tutti i Laccato lucido - All Glossy laquered **€ 10.373,00**

(B) Inserti: Tutte le combinazioni con oro/argento foglia con laccati
Insert: Gold/Silver foil combined with all laquered

CUE RACK-BODY-A - BAROQUE

Porta stecche per biliardo da 8-9 piedi con orologio al quarzo
Pool Cue Rack for 8-9 Feet with quarz clock

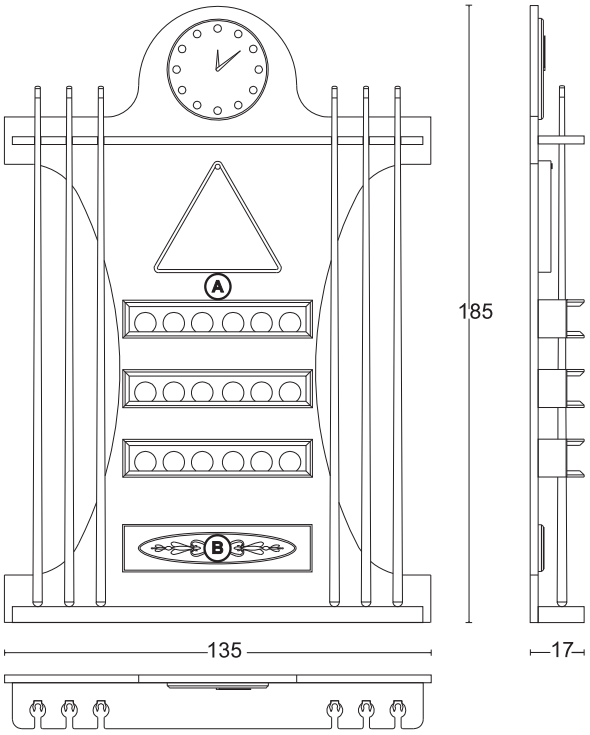

(A) Tutti i Laccato opaco - All Opaque laquered **€ 5.250,30**

(B) Inserti: Tutte le combinazioni di oro/argento foglia con tutti i laccati
Insert: Gold/Silver foil combined with all laquered

(A) Tutti i Laccato lucido - All Glossy laquered **€ 6.009,30**

(B) Inserti: Tutte le combinazioni di oro/argento foglia con tutti i laccati
Insert: Gold/Silver foil combined with all laquered

- stecche in legno L.-Standard - da cm.145 (set 6 pezzi) - wooden Pool cue L.-Standard - cm. 145 (set 6 pieces) **€ 1.821,60**
- Set biglie Ø 52,4 mm. Snooker inglese - Ø 57mm. per Pool americano - Ø 68 mm per Piramide russa **€ 607,20**
  Set balls Ø 52,4 mm. english Snooker - Ø 57mm. American Pool - Ø 68 mm Russian Piramid

ART DECO 72 > 109

VISMARADESIGN®

TV - LIFT & FIRE - 158 - ART DECO

Struttura per Home Cinema - a parete (con salita TV motorizzata computerizzata e telecomandata - completo di Bio-Camino ecologico)
Home Cinema - Wall Rack (motorized, computerized and remote-controlled TV lift system - provided with ecological bio-fireplace)

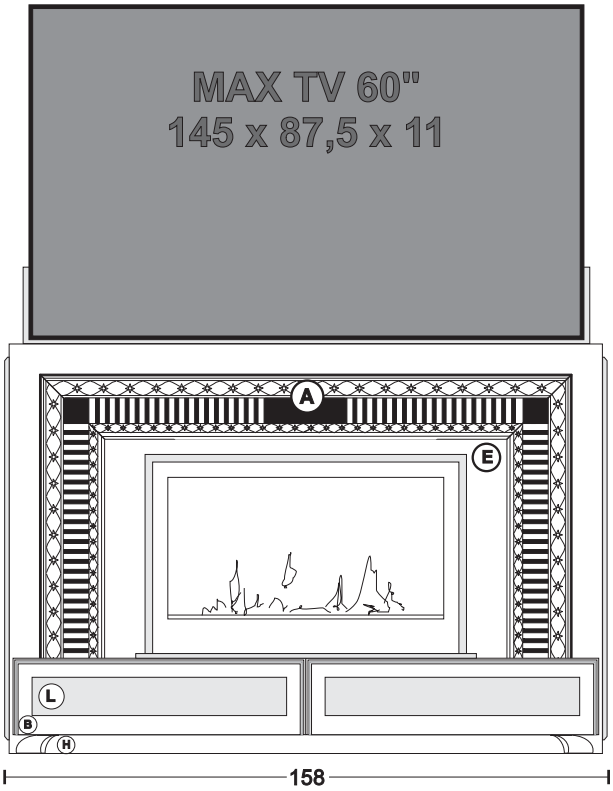

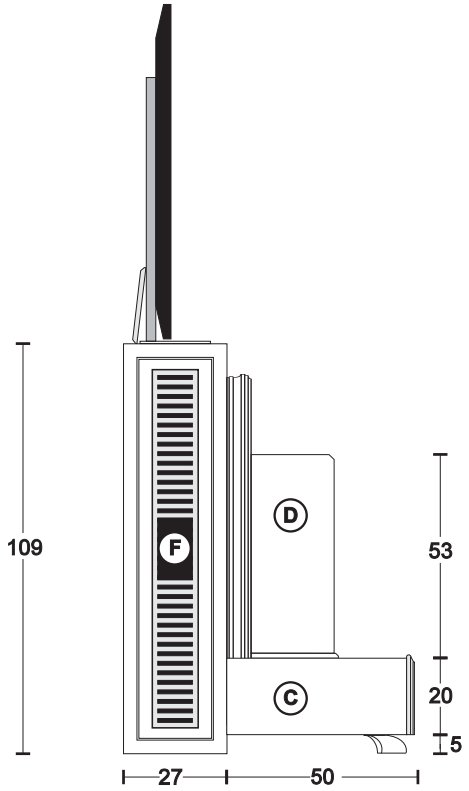

Finiture e combinazioni - Finishings and combinations

A+F	Oro/Argento foglia+nero/bianco/crema (Gold/Silver foil+Black/White/Creaml)	B+C+D+E	Tutti i laccati opachi - decorazioni argento/oro foglia (all opaque laquering - silver/gold foil decorations)
H	Argento/Oro foglia (Silver/Gold foil)	L	Vetri:Bianco/Fume (glass white or fume) — **€ 19.152,10**
A+F	Nero e Bianco Lucido (gloss White and Black)	B+C+D+E	Bianco opaco - decorazioni Nero (opaque white- Black decorations)
H	Nero o Bianco Lucido (gloss White or Black)	L	Vetri:Bianco/Fume (glass white or fume) — **€ 20.543,60**
A+F	Argento foglia+bianco+patina bianca (Silver foil+White+white patina)	B+C+D+E	Bianco opaco - decorazioni argento foglia+patina bianca (opaque white - silver foil decorations+White Patina)
H	Argento foglia+patina bianca (Silver foil+white patina)	L	Vetri:Bianco/Fume (glass white or fume) — **€ 19.658,10**
A+F	Oro foglia+avorio+patina avorio (Gold foil+Ivory+Ivory patina)	B+C+D+E	Avorio opaco - decorazioni oro foglia+patina avorio (opaque Ivory - gold foil decorations+Ivory Patina)
H	Oro foglia+patina avorio (Gold foil+Ivory patina)	L	Vetri:Bianco/Fume (glass white or fume) — **€ 19.658,10**

TV - LIFT & BAR - 158 - ART DECO

Struttura per Home Cinema - a parete (con salita TV motorizzata computerizzata e telecomandata - completo di Mobile a 3 ante push)
Home Cinema - Wall Rack (with motorized, computerized and remote-controlled TV lift system - provided with a 3 push-doors cabinet)

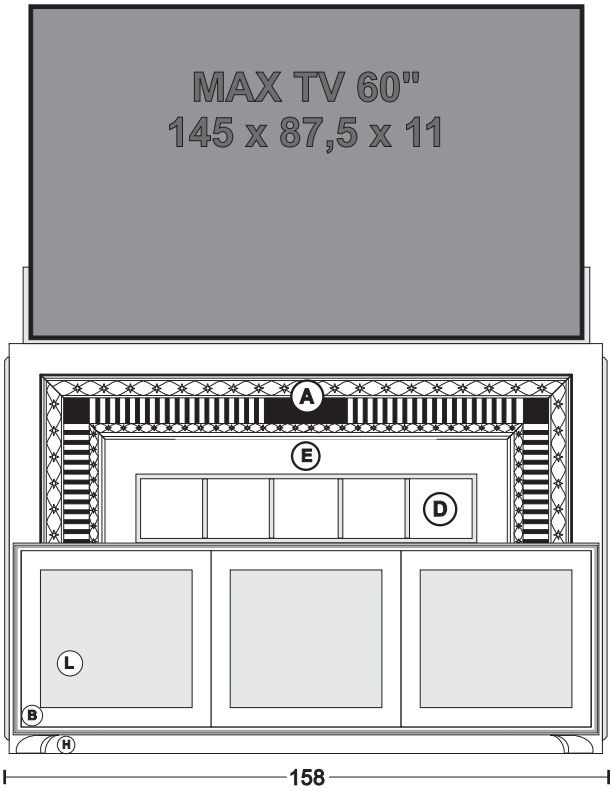

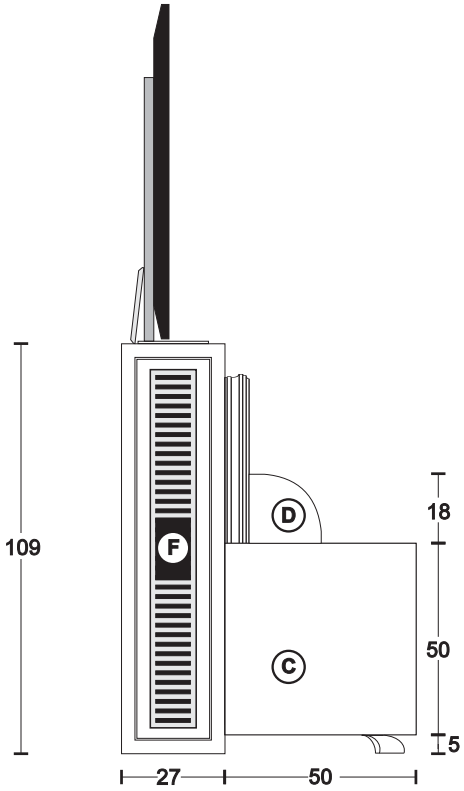

Finiture e combinazioni - Finishings and combinations

A+F Oro/Argento foglia+nero/bianco/crema (Gold/Silver foil+Black/White/Creaml)	B+C+D+E Tutti i laccati opachi - decorazioni argento/oro foglia (all opaque laquering - silver/gold foil decorations)	
H Argento/Oro foglia (Silver/Gold foil)	L Vetri:Bianco/Fume (glass white or fume)	**€ 17.229,30**
A+F Nero e Bianco Lucido (gloss White and Black)	B+C+D+E Bianco opaco - decorazioni Nero (opaque white- Black decorations)	
H Nero o Bianco Lucido (gloss White or Black)	L Vetri:Bianco/Fume (glass white or fume)	**€ 18.620,80**
A+F Argento foglia+bianco+patina bianca (Silver foil+White+white patina)	B+C+D+E Bianco opaco - decorazioni argento foglia+patina bianca (opaque white - silver foil decorations+White Patina)	
H Argento foglia+patina bianca (Silver foil+white patina)	L Vetri:Bianco/Fume (glass white or fume)	**€ 17.760,60**
A+F Oro foglia+avorio+patina avorio (Gold foil+Ivory+Ivory patina)	B+C+D+E Avorio opaco - decorazioni oro foglia+patina avorio (opaque Ivory - gold foil decorations+Ivory Patina)	
H Oro foglia+patina avorio (Gold foil+Ivory patina)	L Vetri:Bianco/Fume (glass white or fume)	**€ 17.760,60**

TV - LIFT & FIRE - 182 - ART DECO

Struttura per Home Cinema - a parete (con salita TV motorizzata computerizzata e telecomandata - completo di Bio-Camino ecologico)
Home Cinema - Wall Rack (motorized, computerized and remote-controlled TV lift system - provided with ecological bio-fireplace)

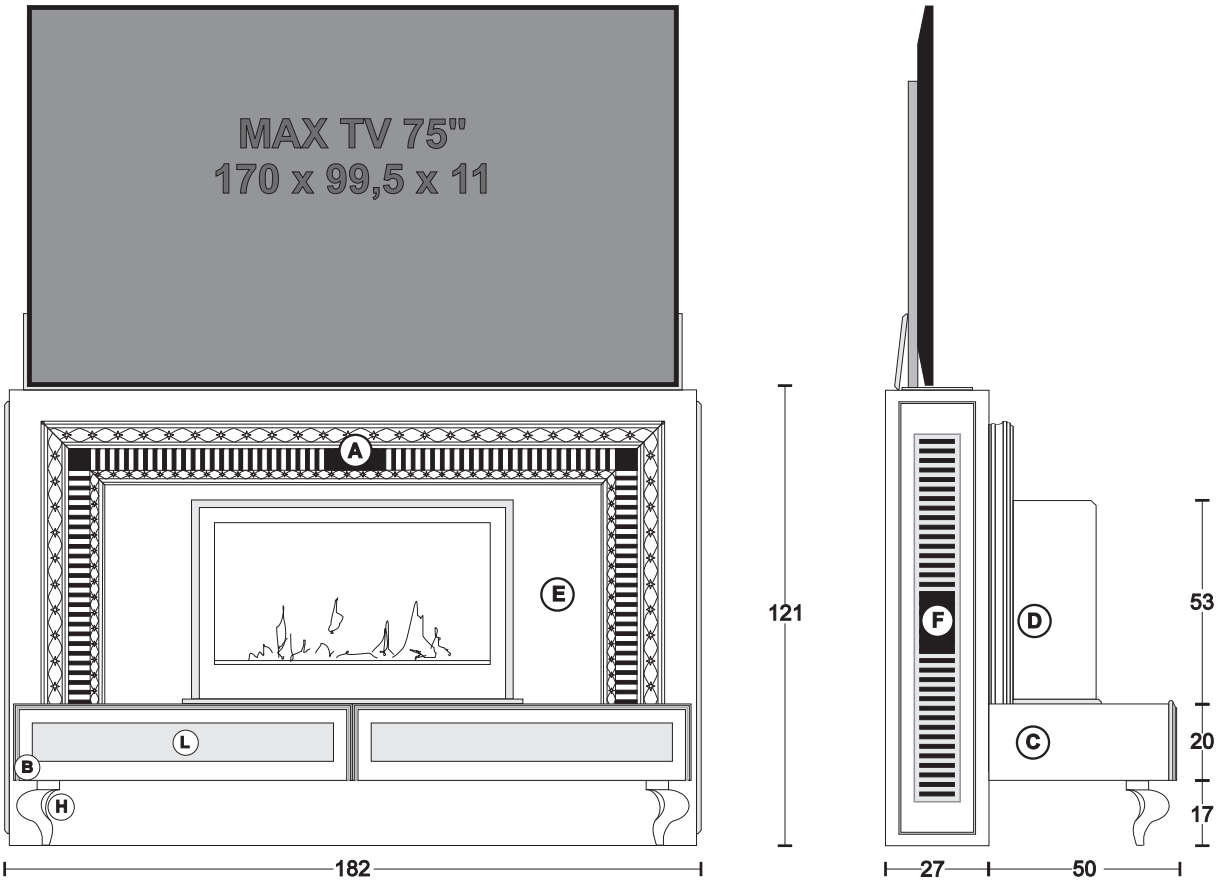

Finiture e combinazioni - Finishings and combinations

A+F Oro/Argento foglia+nero/bianco/crema (Gold/Silver foil+Black/White/Creaml)	B+C+D+E Tutti i laccati opachi - decorazioni argento/oro foglia (all opaque laquering - silver/gold foil decorations)	
H Argento/Oro foglia (Silver/Gold foil)	L Vetri:Bianco/Fume (glass white or fume)	**€ 19.547,00**
A+F Nero e Bianco Lucido (gloss White and Black)	B+C+D+E Bianco opaco - decorazioni Nero (opaque white- Black decorations)	
H Nero o Bianco Lucido (gloss White or Black)	L Vetri:Bianco/Fume (glass white or fume)	**€ 20.933,00**
A+F Argento foglia+bianco+patina bianca (Silver foil+White+white patina)	B+C+D+E Bianco opaco - decorazioni argento foglia+patina bianca (opaque white - silver foil decorations+White Patina)	
H Argento foglia+patina bianca (Silver foil+white patina)	L Vetri:Bianco/Fume (glass white or fume)	**€ 20.053,00**
A+F Oro foglia+avorio+patina avorio (Gold foil+Ivory+Ivory patina)	B+C+D+E Avorio opaco - decorazioni oro foglia+patina avorio (opaque Ivory - gold foil decorations+Ivory Patina)	
H Oro foglia+patina avorio (Gold foil+Ivory patina)	L Vetri:Bianco/Fume (glass white or fume)	**€ 20.053,00**

TV - LIFT & BAR - 182 - ART DECO

Struttura per Home Cinema - a parete (con salita TV motorizzata computerizzata e telecomandata - completo di Mobile a 4 ante push)
Home Cinema - Wall Rack (with motorized, computerized and remote-controlled TV lift system - provided with a 4 push-doors cabinet)

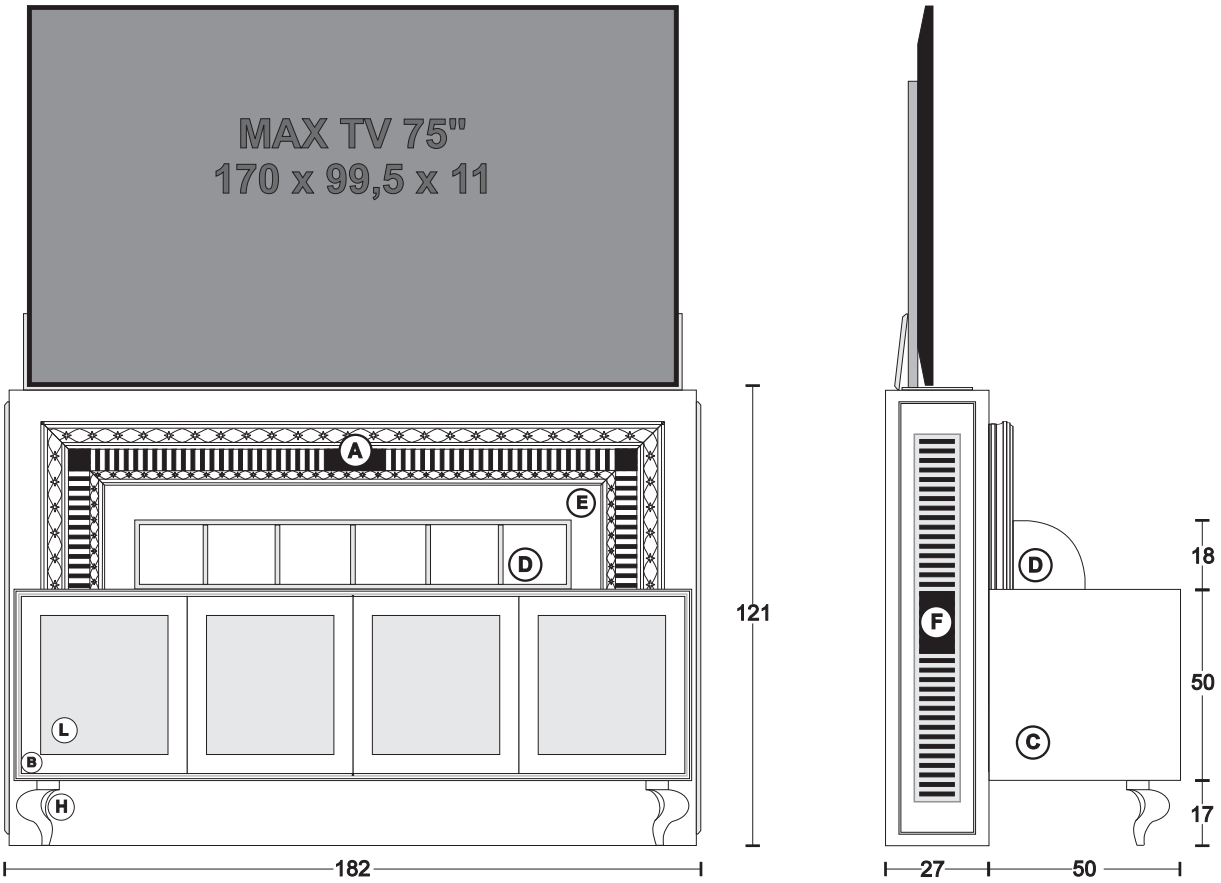

Finiture e combinazioni - Finishings and combinations

A + F	Oro/Argento foglia+nero/bianco/crema (Gold/Silver foil+Black/White/Creaml)	B + C + D + E	Tutti i laccati opachi - decorazioni argento/oro foglia (all opaque laquering - silver/gold foil decorations)
H	Argento/Oro foglia (Silver/Gold foil)	L	Vetri:Bianco/Fume (glass white or fume) — **€ 17.721,00**
A + F	Nero e Bianco Lucido (gloss White and Black)	B + C + D + E	Bianco opaco - decorazioni Nero (opaque white- Black decorations)
H	Nero o Bianco Lucido (gloss White or Black)	L	Vetri:Bianco/Fume (glass white or fume) — **€ 19.112,50**
A + F	Argento foglia+bianco+patina bianca (Silver foil+White+white patina)	B + C + D + E	Bianco opaco - decorazioni argento foglia+patina bianca (opaque white - silver foil decorations+White Patina)
H	Argento foglia+patina bianca (Silver foil+white patina)	L	Vetri:Bianco/Fume (glass white or fume) — **€ 18.254,50**
A + F	Oro foglia+avorio+patina avorio (Gold foil+Ivory+Ivory patina)	B + C + D + E	Avorio opaco - decorazioni oro foglia+patina avorio (opaque Ivory - gold foil decorations+Ivory Patina)
H	Oro foglia+patina avorio (Gold foil+Ivory patina)	L	Vetri:Bianco/Fume (glass white or fume) — **€ 18.254,50**

SLIDING HOME CINEMA - ART DECO

Struttura per Home Cinema - a parete con apertura motorizzata, computerizzata e telecomandata - luci led laterali
Home Cinema - Wall Rack - Motorized and computerized opening, with remote control - LED lights on sides

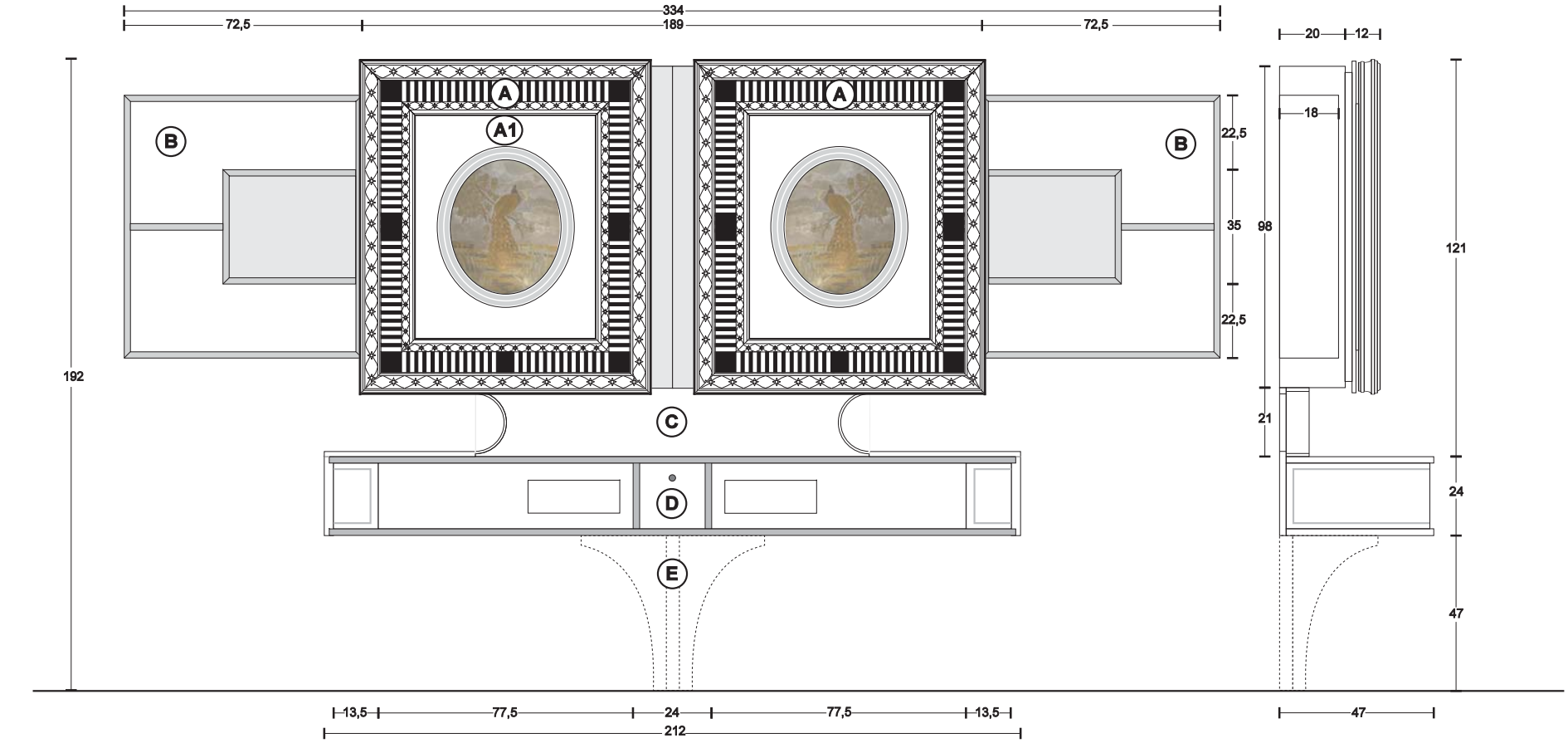

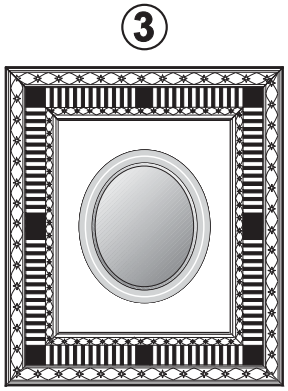

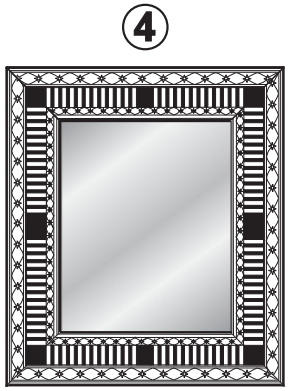

SLIDING HOME CINEMA - ART DECO

Struttura per Home Cinema - a parete con apertura motorizzata, computerizzata e telecomandata - luci led laterali
Home Cinema - Wall Rack - Motorized and computerized opening, with remote control - LED lights on sides

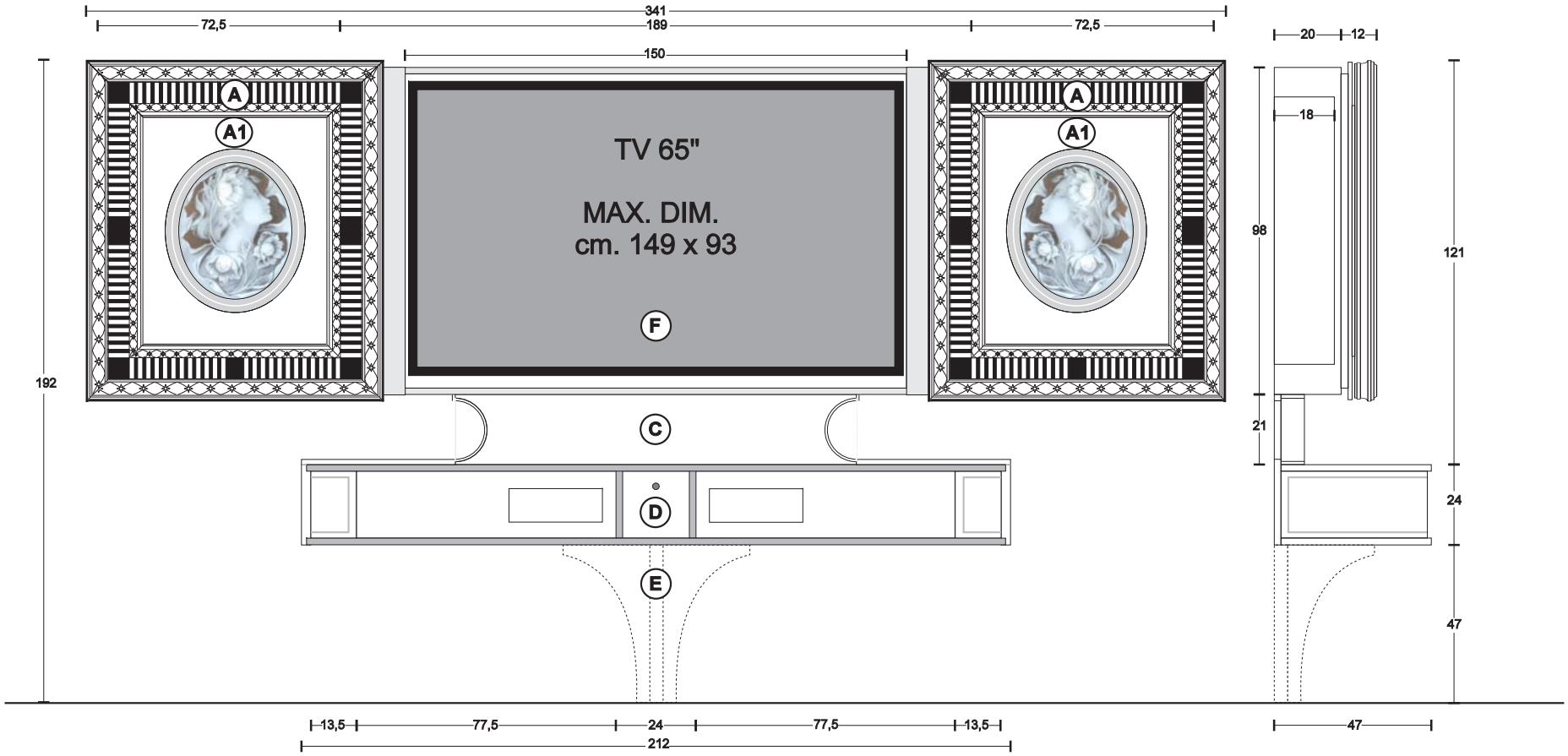

A Oro/Argento Foglia+nero/crema/bianco
Gold/Silver foil+black/cream/white

A1 + **C** + **E** + **F** Tutti i laccati opachi
all opaque laquering

B Tutti i laccati opachi-Decorazioni Oro/Argento
all opaque laquering-decoration gold/silver foil

D Top Oro/Argento Foglia-parti rimanenti
tutti i laccati opachi-Decorazioni Oro/Argento
Top gold/silver foil-remaining parts all opaque laquering-decoration gold/silver foil

Con-with **1** EURO 23.200,10 | Con-with **2** EURO 26.551,80 | Con-with **3** EURO 22.530,20 | Con-with **4** EURO 22.555,50 | Con-with **5** EURO 23.427,80

A Bianco e Nero Lucido
Gloss White and Black

A1 + **C** + **E** + **F** Bianco opaco
opaque White

B Bianco opaco-Decorazioni Nero
opaque White-Black decoration

D Bianco opaco decorazioni nero
Opaque white - Black decorations

Con-with **1** EURO 24.920,50 | Con-with **2** EURO 28.273,30 | Con-with **3** EURO 24.262,70 | Con-with **4** EURO 24.288,00 | Con-with **5** EURO 25.148,20

A Oro/argento+patina avorio/bianco
Gold/silver foil+ivory/white patina

A1 + **C** + **E** + **F** Avorio/bianco
Ivory/white

B Avorio/bianco
Ivory/white

D Top Oro/Argento+patina avorio/bianco+laccato avorio/bianco
Top gold/silver foil+ivory/white patina+lacquered ivory/white

Con-with **1** EURO 23.875,50 | Con-with **2** EURO 27.228,30 | Con-with **3** EURO 23.204,50 | Con-with **4** EURO 23.229,80 | Con-with **5** EURO 24.103,20

REVOLVING HOME CINEMA - ART DECO

Struttura per Home Cinema - centro stanza con rotazione TV motorizzata, computerizzata e telecomandata
Home Cinema - Standing rack - Motorized and computerized revolving TV , with remote control

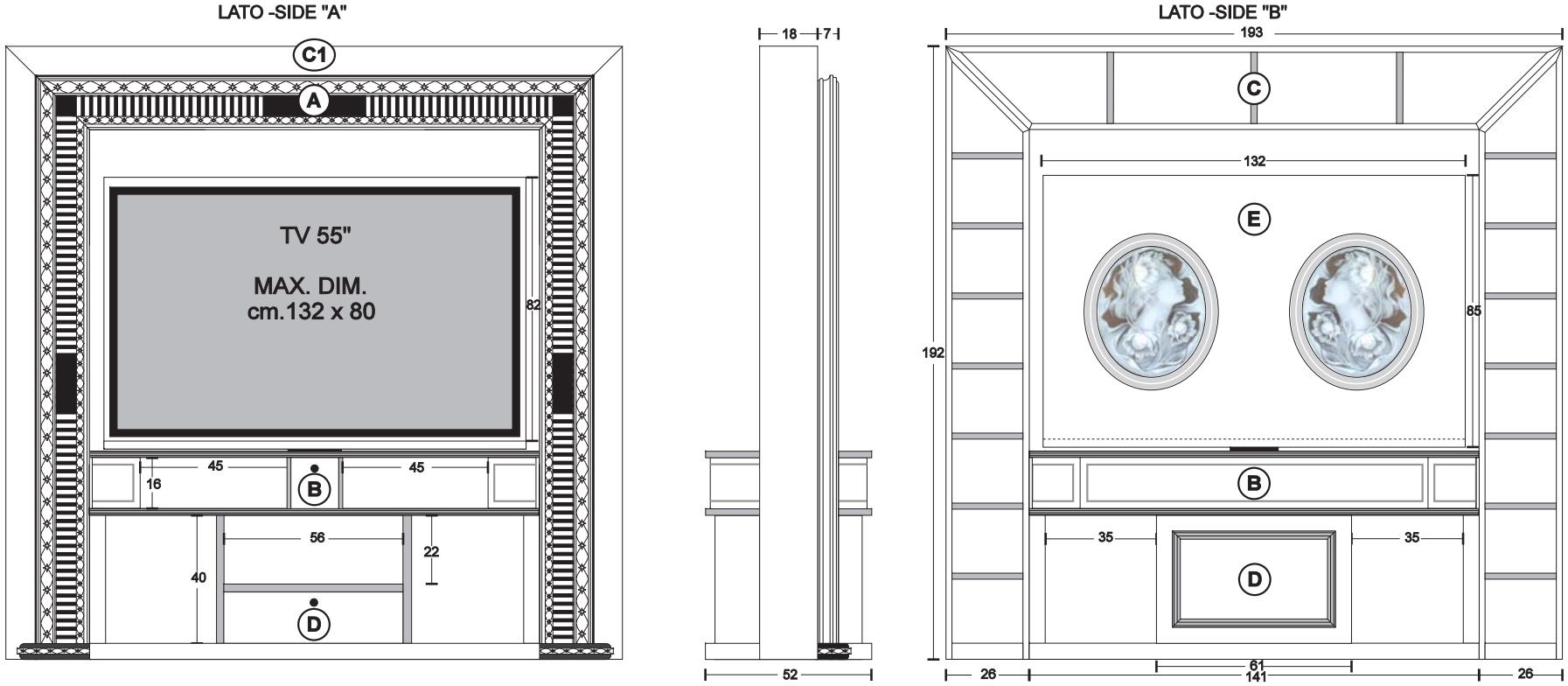

REVOLVING HOME CINEMA - ART DECO

Struttura per Home Cinema - centro stanza con rotazione TV motorizzata, computerizzata e telecomandata
Home Cinema - Standing rack - Motorized and computerized revolving TV , with remote control

DECORAZIONE PANNELLO LATO "B" -DECORATION PANEL SIDE "B"

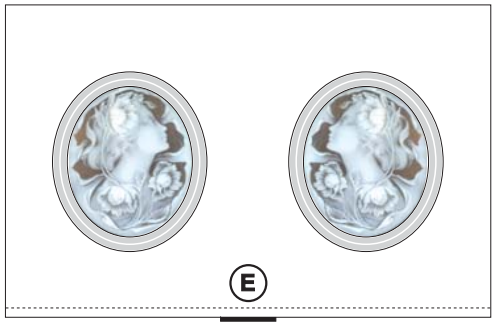

1 ovale con Cammeo
Oval with Cameo

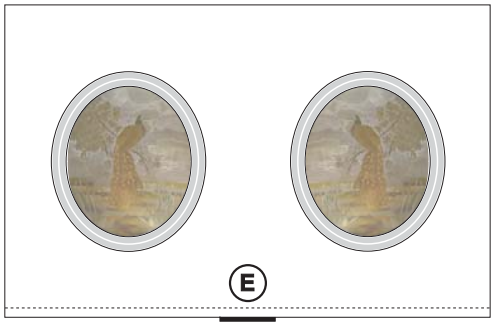

2 Ovale con Pavone Artistico oro 23/22/20/18/16/12 Carati
Oval with Artistic peacock Gold 23/22/20/18/16/12 carats

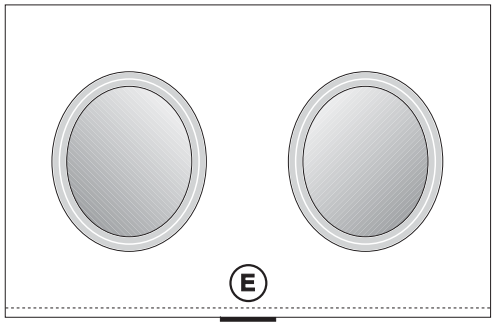

3 Ovale con specchio bisellato
Oval with bevelled mirror

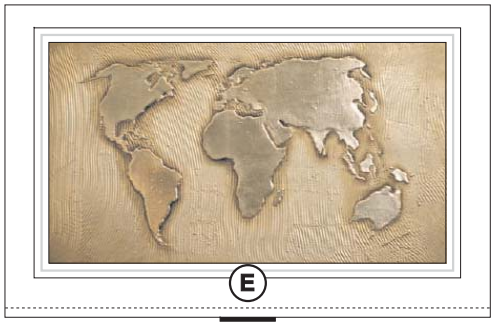

4 "Il Mondo" decorazione in rilievo in foglia platino
"The world" decoration in relief - platinum foil

A Oro/Argento Foglia+nero/crema/bianco
Gold/Silver foil+black/cream/white

Con-with 1 EURO 15.593,60

C1+C+E+D Tutti i laccati opachi-Decorazioni Oro/Argento
all opaque laquering-decoration gold/silver foil

Con-with 2 EURO 19.206,00

Con-with 3 EURO 15.166,80

B Oro/Argento Foglia/tutti i laccati opachi
Gold/silver foil all opaque laquering

Con-with 4 EURO 16.709,00

A Bianco e Nero Lucido
Gloss White and Black

Con-with 1 EURO 16.944,40

C1+C+E+D Bianco opaco-Decorazioni Nero
opaque White-Black decoration

Con-with 2 EURO 20.561,20

Con-with 3 EURO 16.520,90

B Bianco opaco-Decorazioni Nero
opaque White-Black decoration

Con-with 4 EURO 18.064,20

A Oro/argento patinato avorio/bianco
Gold/silver foil+ivory/white patina

Con-with 1 EURO 16.049,00

C1+C+E+D Avorio/bianco+decorazioni oro/argento foglia
Ivory/white+gold/silver foil decorations

Con-with 2 EURO 19.661,40

Con-with 3 EURO 15.622,20

B Oro/argento foglia+avorio/bianco
con decorazioni oro/argento foglia
Gold/silver foil+ivory/white
with gold/silver foil decorations

Con-with 4 EURO 17.164,40

THE WALL HOME CINEMA - ART DECO

Struttura per Home Cinema - a parete
Home Cinema - Wall Rack

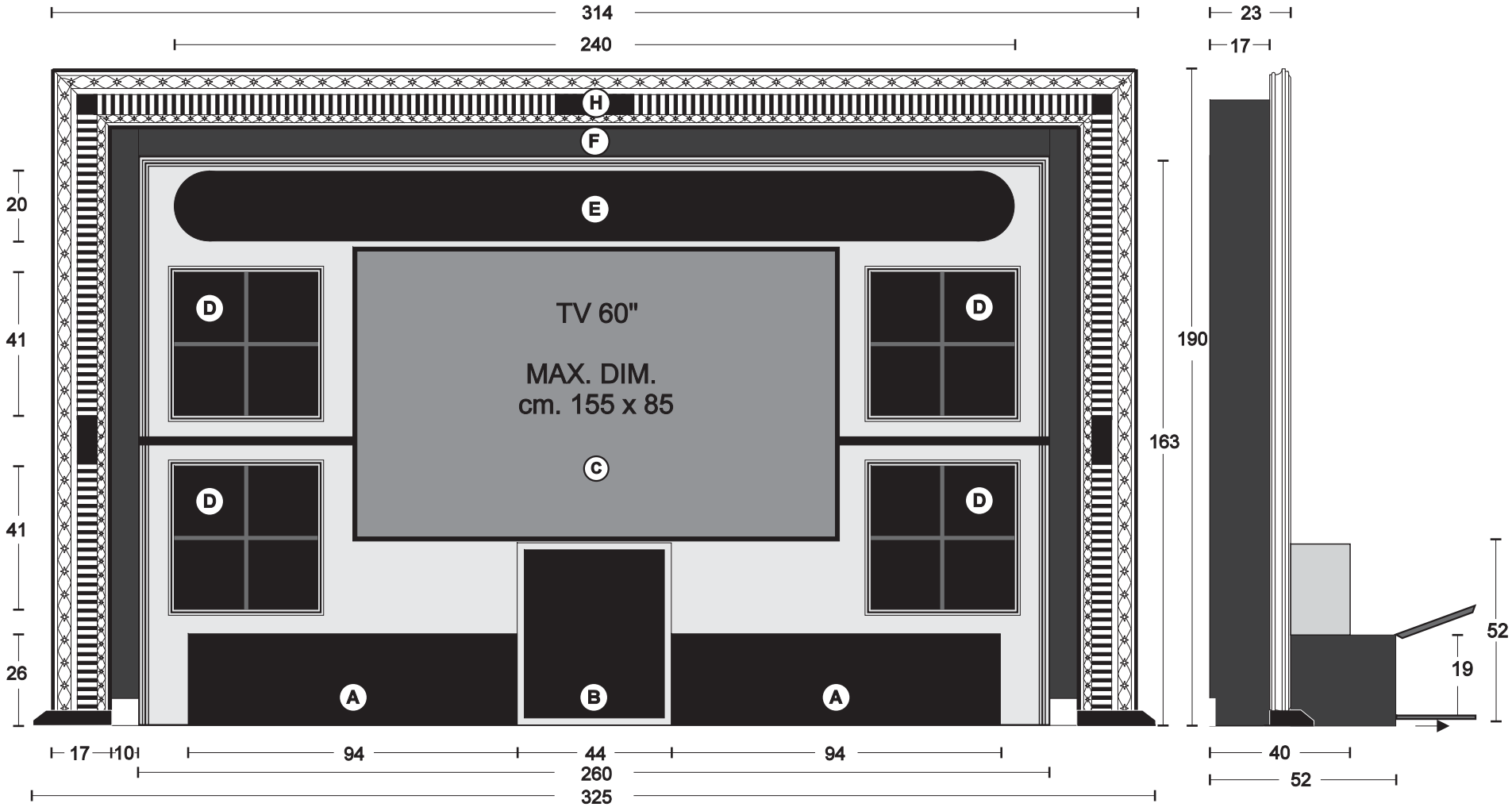

B+C	ORO/ARGENTO FOGLIA (gold/silver foil)	A+D+E+F	METALBLACK	H	ORO/ARGENTO FOGLIA+NERO (gold/silver foil+black)	€ 13.912,80
B+C	ORO FOGLIA (gold foil)	A+D+E+F	ROSSO ROMANO/CREMA	H	ORO FOGLIA+ROSSO ROMANO/CREMA (gold foil+Red/Cream)	€ 13.912,80
B+C	BIANCO (white)	A+D+E+F	NERO(black)	H	BIANCO E NERO LUCIDO(gloss white and black)	€ 15.567,20
B+C	ORO/ARGENTO FOGLIA (gold/silver foil)	A+D+E+F	AVORIO/BIANCO (ivory/white)	H	ORO/ARGENTO+patina avorio/bianco (gold/silver foil+ivory/white patina))	€ 14.329,70

THE FRAME HOME CINEMA - ART DECO

Struttura per Home Cinema - a parete (con luci retro-pannello diffuse)
Home Cinema - Wall Rack (with spreading back-panel lighting)

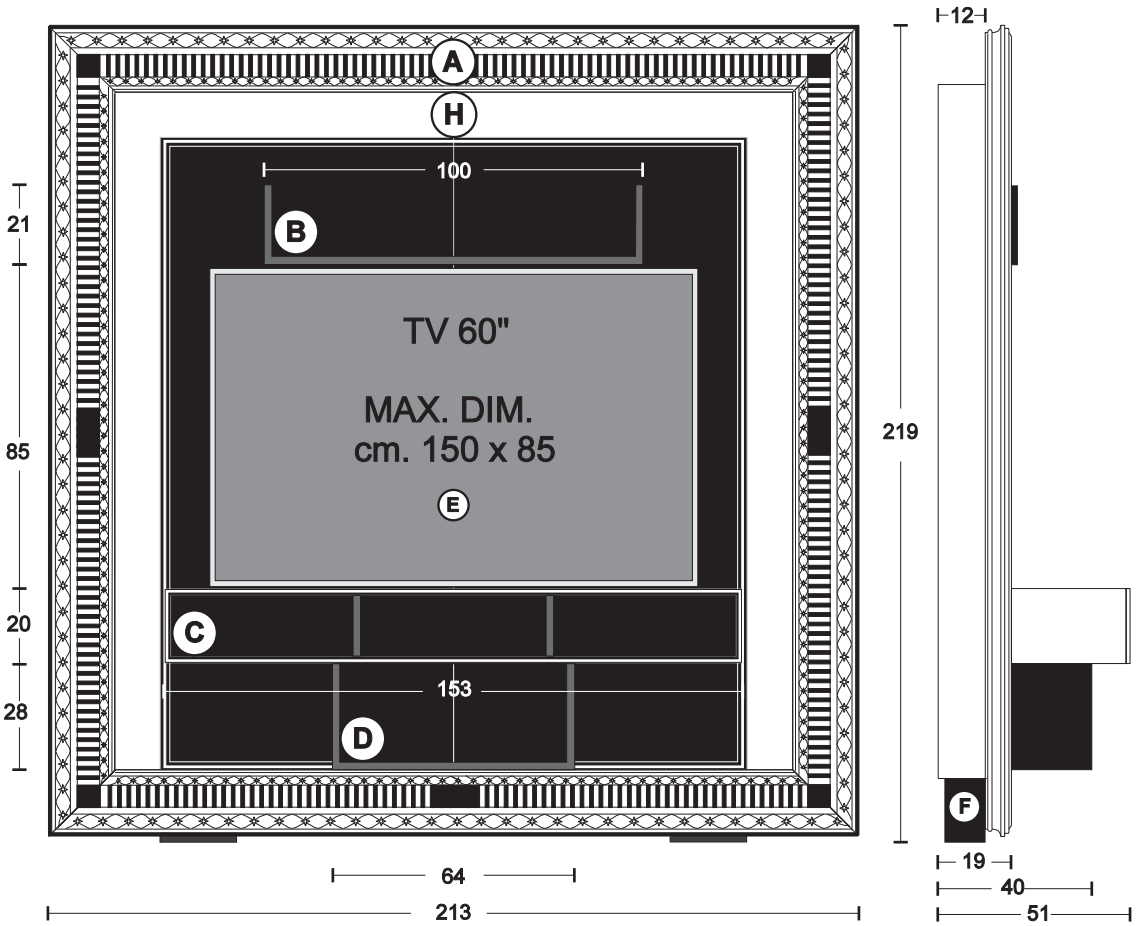

Finiture e combinazioni - Finishings and combinations

A+C	ORO FOGLIA E NERO (gold foi+black)	B+D+E+F	METALBLACK	H METALGOLD	€ 8.773,60
A+C	ARGENTO FOGLIA E NERO (silver foil+black)	B+D+E+F	METALBLACK	H METALSILVER	€ 8.773,60
A+C	ORO FOGLIA E ROSSO ROMANO (gold foi+Red Romano)	B+D+E+F	ROSSO ROMANO	H METALGOLD	€ 8.773,60
A+C	ORO FOGLIA E CREMA (gold foi+Cream)	B+D+E+F	CREMA (Cream)	H METALGOLD	€ 8.773,60
A	BIANCO E NERO LUCIDO (gloss white and black)	B+D+F	NERO (black)	H+E BIANCO OPACO (white) C BIANCO LUCIDO (gloss white)	€ 10.727,20
A+C	ARGENTO PATINATO BIANCO (silver foil+white patina)	B+D+E+F	BIANCO OPACO Decorazioni argento foglia (Opaque white+Silver foil decoration)	H METALSILVER	€ 9.211,40
A+C	ORO PATINATO AVORIO (gold foil+ivory patina)	B+D+E+F	AVORIO OPACO Decorazioni oro foglia (Opaque ivory+gold foil decoration)	H METALGOLD	€ 9.211,40

THE FRAME CONTAINER-BAR - ART DECO

Mobile con scaffali a giorno e ante scorrevoli - a parete (con led bianchi sotto piani orizzontali) ①②③④
Open wall-container, with sliding doors- Horizontal shelves enlightened by white LEDs ①②③④

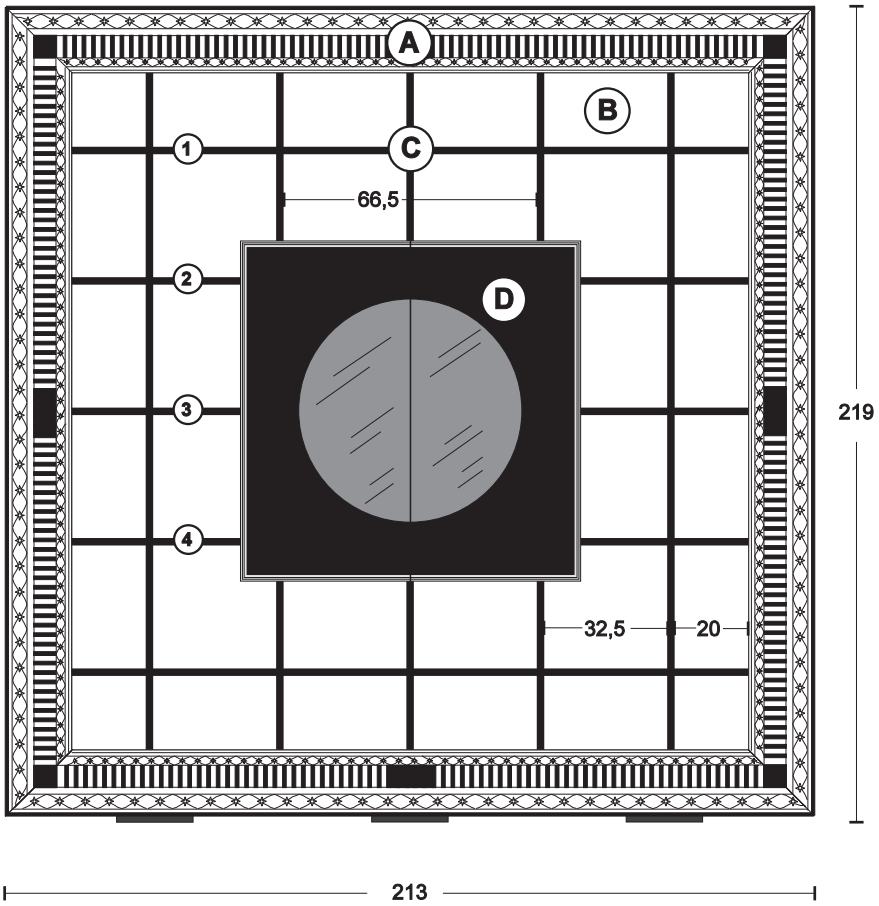

-Sezione
-Section

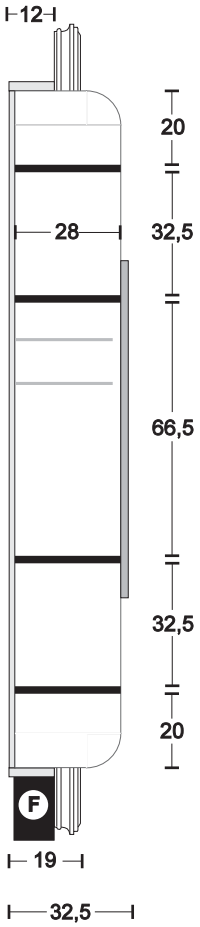

Finiture e combinazioni - Finishings and combinations

Ⓐ ORO FOGLIA E NERO (gold foil+black)	Ⓑ ORO FOGLIA (gold foil)	Ⓒ+Ⓕ METALBLACK	Ⓓ METALBLACK	€ 12.397,00
Ⓐ ARGENTO FOGLIA E NERO (silver foil+black)	Ⓑ ARGENTO FOGLIA (silver foil)	Ⓒ+Ⓕ METALBLACK	Ⓓ METALBLACK	€ 12.397,00
Ⓐ ORO FOGLIA E ROSSO ROMANO (gold foil+Roman Red)	Ⓑ ORO FOGLIA (gold foil)	Ⓒ+Ⓕ ROSSO ROMANO (Roman Red)	Ⓓ ROSSO ROMANO (Roman Red)	€ 12.397,00
Ⓐ ORO FOGLIA E CREMA (gold foil+cream)	Ⓑ ORO FOGLIA (gold foil)	Ⓒ+Ⓕ CREMA (cream)	Ⓓ CREMA (cream)	€ 12.397,00
Ⓐ BIANCO E NERO LUCIDO (gloss white+black)	Ⓑ BIANCO OPACO (white)	Ⓒ+Ⓕ NERO OPACO (black)	Ⓓ BIANCO LUCIDO (gloss white)	€ 14.337,40
Ⓐ ARGENTO patinato bianco (silver foil+white patina)	Ⓑ ARG. FOGLIA (silver foil)	Ⓒ+Ⓕ BIANCO OPACO (opaque white)	Ⓓ BIANCO OPACO Decorazioni argento foglia (opaque white+silver foil decorations)	€ 12.840,30
Ⓐ ORO patinato avorio (gold foil+ivory patina)	Ⓑ ORO FOGLIA (gold foil)	Ⓒ+Ⓕ AVORIO OPACO (opaque ivory)	Ⓓ AVORIO OPACO Decorazioni oro foglia (opaque ivory+gold foil decorations)	€ 12.840,30

THE FRAME "BIG MIRROR" - ART DECO

Specchio a parete completo di consolle a 2 cassetti e vano a giorno - led bianchi perimetrali - bolle perimetrali su specchio
Wall-mirror with 2-drawer-consolle and open compartment- white leds on perimeter- bubbles on mirror border

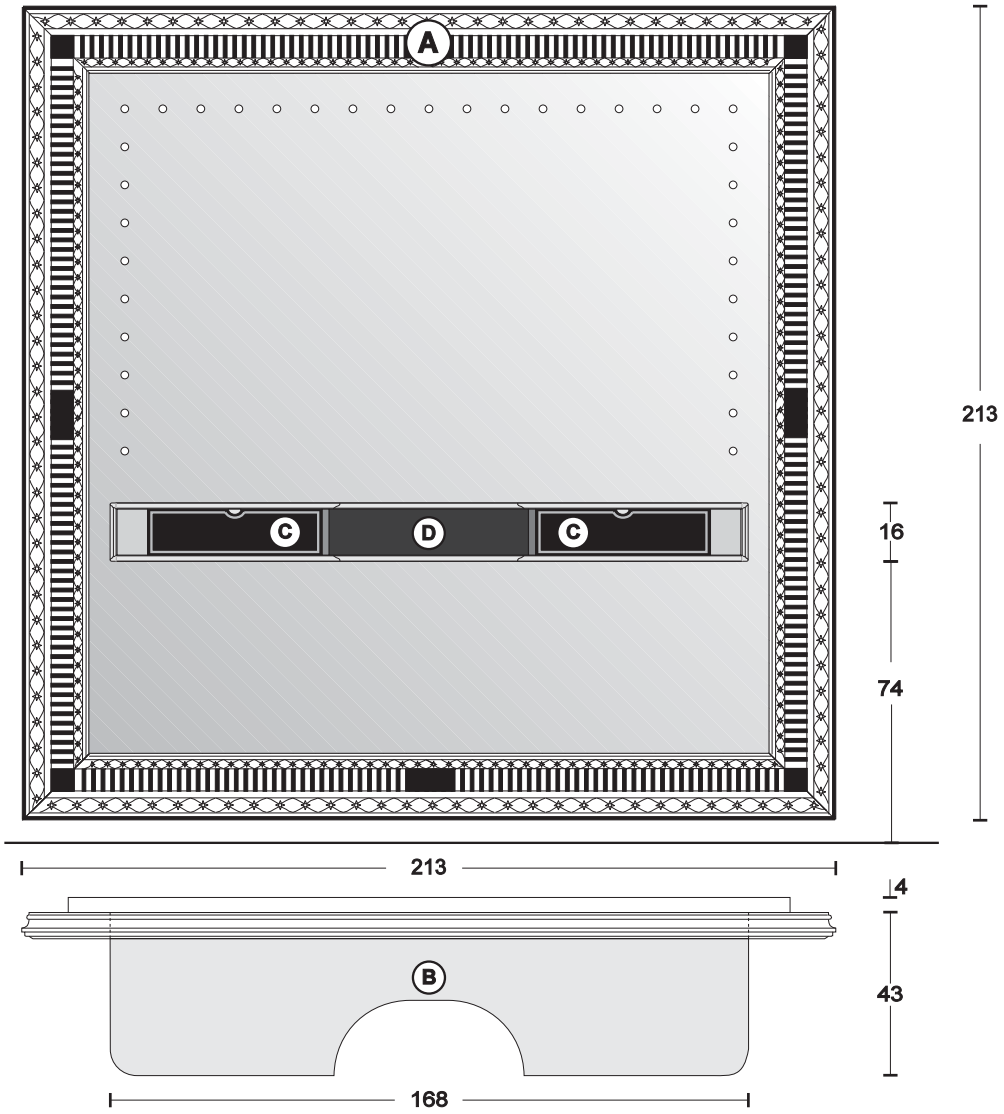

Finiture e combinazioni - Finishings and combinations

(A) ORO FOGLIA E NERO (gold foil+black)	(B) ORO FOGLIA (gold foil)	(C) METALBLACK	(D) METALBLACK	€ 9.510,60
(A) ARGENTO FOGLIA E NERO (silver foil+black)	(B) ARGENTO FOGLIA (silver foil)	(C) METALBLACK	(D) METALBLACK	€ 9.510,60
(A) ORO FOGLIA E ROSSO ROMANO (gold foil+Red Ro)	(B) ORO FOGLIA (gold foil)	(C) ROSSO ROMANO	(D) ROSSO ROMANO	€ 9.510,60
(A) ORO FOGLIA E CREMA (gold foil+cream)	(B) ORO FOGLIA (gold foil)	(C) CREMA (cream)	(D) CREMA (cream)	€ 9.510,60
(A) BIANCO E NERO LUCIDO (gloss white+black)	(B) BIANCO OPACO (white)	(C) NERO LUCIDO (gloss black)	(D) BIANCO OPACO (white)	€ 11.463,10
(A) + (B) ARGENTO FOGLIA patinato bianco (silver foil+white patina)		(C) BIANCO+decorazioni argento foglia (white+silver foil decoration)	(D) BIANCO (white)	€ 9.952,80
(A) + (B) ORO FOGLIA patinato avorio (gold foil+ivory patina)		(C) AVORIO+decorazioni oro foglia (ivory+gold foil decoration)	(D) AVORIO (ivory)	€ 9.952,80

STAR GATE - ART DECO

Struttura per Home Cinema - a parete (con luci retro-pannello diffuse)
Home Cinema - Wall Rack (with spreading back-panel lighting)

-Sezione
-Section

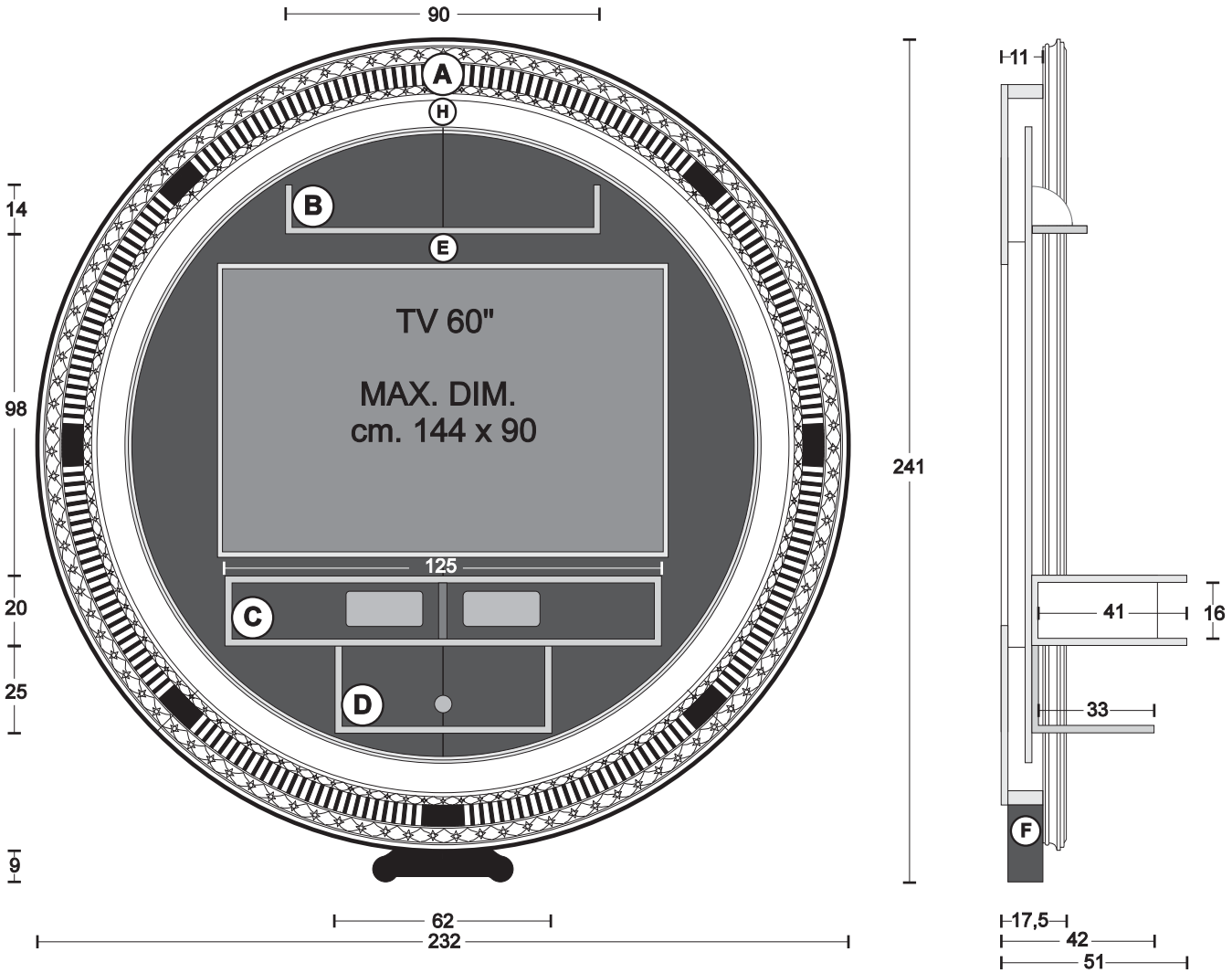

Finiture e combinazioni - Finishings and combinations

A+C	ORO FOGLIA E NERO (gold foil+black)	B+D+E+F	METALBLACK	H METALGOLD	€ 11.883,30
A+C	ORO FOGLIA E ROSSO ROMANO (gold foil+Red Romano)	B+D+E+F	ROSSO ROMANO	H METALGOLD	€ 11.883,30
A+C	ORO FOGLIA E CREMA (gold foil+cream)	B+D+E+F	CREMA (cream)	H METALGOLD	€ 11.883,30
A+C	ARGENTO FOGLIA E NERO (silver foil+black)	B+D+E+F	METALBLACK	H METALSILVER	€ 11.883,30
A	BIANCO E NERO LUCIDO (gloss white and black)	B+D+F	NERO (black)	H+E BIANCO OPACO (white) C BIANCO LUCIDO (gloss white)	€ 13.778,60
A+C	ARGENTO foglia patinato bianco (silver foil+white patina)	B+D+E+F	BIANCO OPACO decorazioni argento foglia (Opaque white+silver foil decoration)	H METALSILVER	€ 12.327,70
A+C	ORO foglia patinato avorio (gold foil+ivory patina)	B+D+E+F	AVORIO OPACO decorazioni oro foglia (Opaque ivory+goldr foil decoration)	H METALGOLD	€ 12.327,70

STAR GATE CONTAINER-BAR - ART DECO

Mobile con scaffali a giorno e ante scorrevoli - a parete (con led bianchi sotto piani orizzontali) ① ② ③ ④
Open wall-container, with sliding doors- Horizontal shelves enlightened by white LEDs ① ② ③ ④

-Sezione
-Section

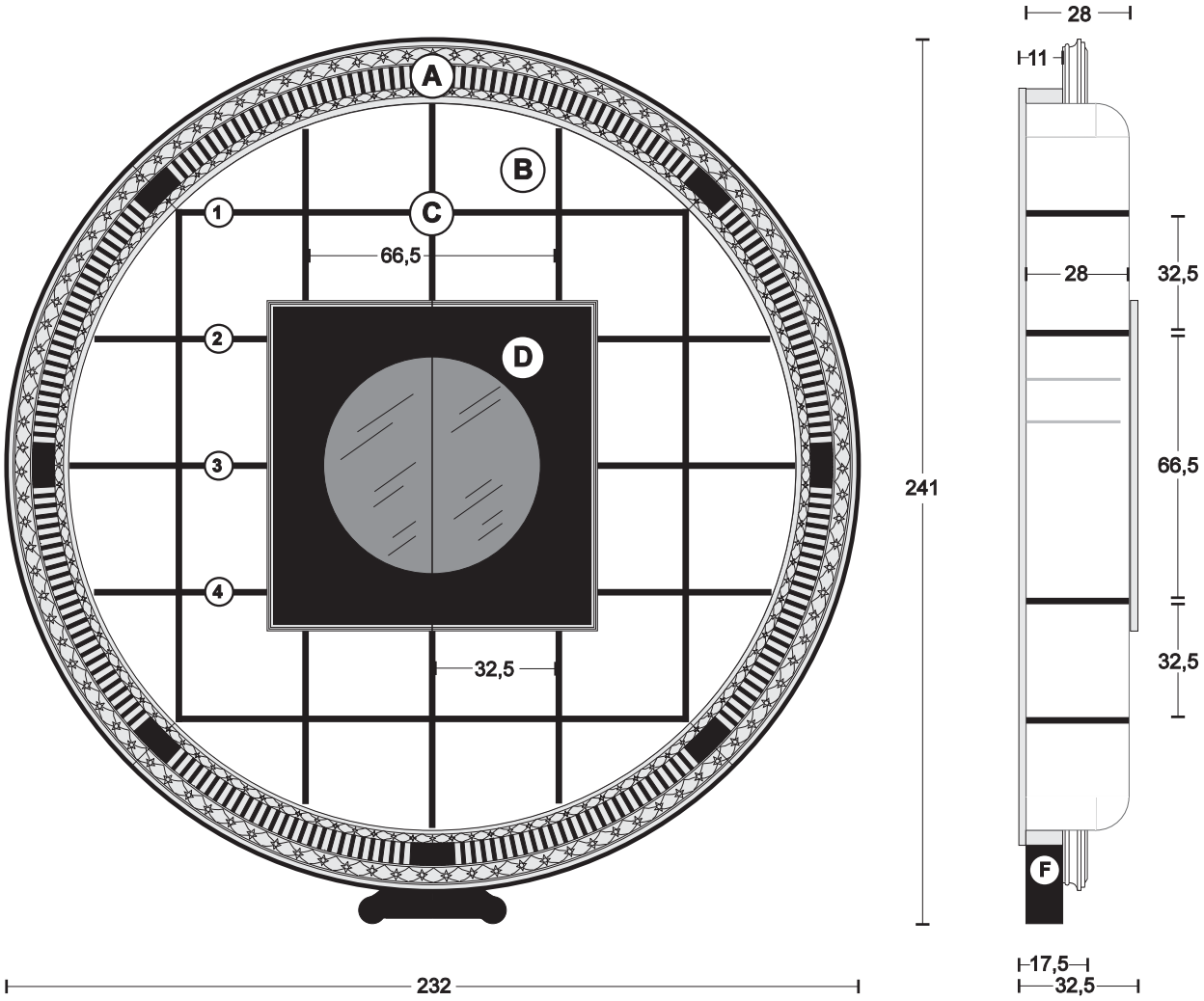

Finiture e combinazioni - Finishings and combinations

(A) ORO FOGLIA E NERO (gold foi+black)	(B) ORO FOGLIA (gold foi)	(C)+(F) METALBLACK	(D) METALBLACK	**€ 15.495,70**
(A) ARGENTO FOGLIA E NERO (silver foil+black)	(B) ARGENTO FOGLIA (silver foil)	(C)+(F) METALBLACK	(D) METALBLACK	**€ 15.495,70**
(A) ORO FOGLIA E ROSSO ROMANO (gold foil+Red Ro)	(B) ORO FOGLIA (gold foil)	(C)+(F) ROSSO ROMANO	(D) ROSSO ROMANO	**€ 15.495,70**
(A) ORO FOGLIA E CREMA (gold foil+cream)	(B) ORO FOGLIA (gold foil)	(C)+(F) CREMA (cream)	(D) CREMA (cream)	**€ 15.495,70**
(A) BIANCO E NERO LUCIDO (gloss white+black)	(B) BIANCO OPACO (white)	(C)+(F) NERO OPACO (black)	(D) BIANCO LUCIDO (gloss white)	**€ 17.394,30**
(A) ARGENTO patinato bianco (silver foil+white patina)	(B) ARG. FOGLIA (silver foil)	(C)+(F) BIANCO (white)	(D) BIANCO OPACO decorazioni argento foglia (white opaque laquering+silver foil decorations)	**€ 15.939,00**
(A) ORO patinato avorio (gold foil+ivory patina)	(B) ORO FOGLIA (gold foil)	(C)+(F) AVORIO (Ivory)	(D) AVORIO OPACO decorazioni oro foglia (ivory opaque laquering+gold foil decorations)	**€ 15.939,00**

STAR GATE "BIG MIRROR" - ART DECO

Specchio a parete completo di consolle a 2 cassetti e vano a giorno - led bianchi perimetrali - bolle perimetrali su specchio
Wall-mirror with 2-drawer-consolle and open compartment- white leds on perimeter- bubbles on mirror border

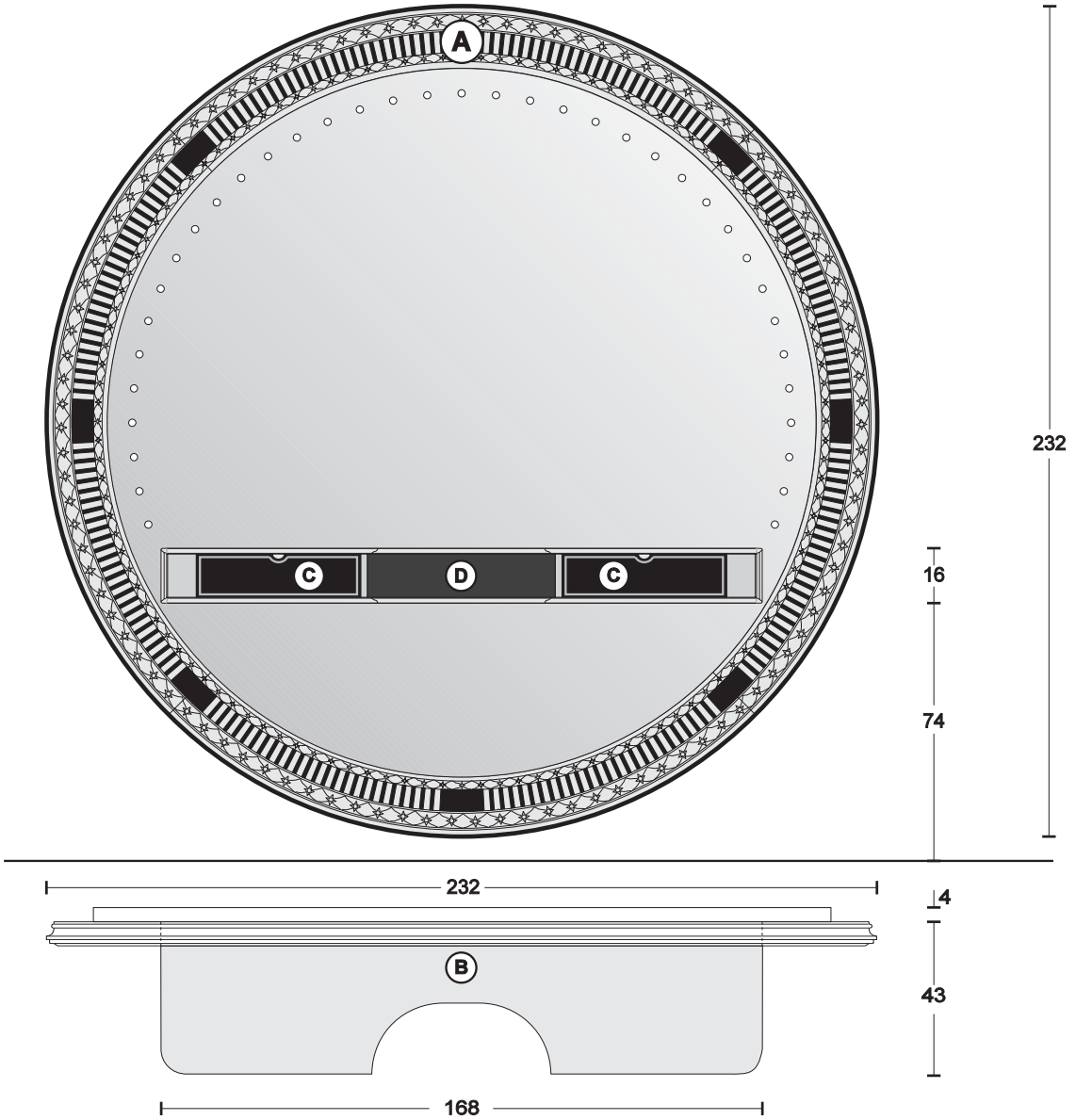

Finiture e combinazioni - Finishings and combinations

A ORO FOGLIA E NERO (gold foil+black)	B ORO FOGLIA (gold foil)	C METALBLACK	D METALBLACK	€ 10.153,00
A ARGENTO FOGLIA E NERO (silver foil+black)	B ARGENTO FOGLIA (silver foil)	C METALBLACK	D METALBLACK	€ 10.153,00
A ORO FOGLIA E ROSSO ROMANO (gold foil+Red Ro)	B ORO FOGLIA (gold foil)	C ROSSO ROMANO	D ROSSO ROMANO	€ 10.153,00
A ORO FOGLIA E CREMA (gold foil+cream)	B ORO FOGLIA (gold foil)	C CREMA (cream)	D CREMA (cream)	€ 10.153,00
A BIANCO E NERO LUCIDO (gloss white+black)	B BIANCO OPACO (white)	C NERO LUCIDO (gloss black)	D BIANCO OPACO (white)	€ 11.966,90
A+B ARGENTO patinato bianco (silver foil+white patina)		C BIANCO decorazioni argento foglia (white+silver foil decoration)	D BIANCO (white)	€ 10.595,20
A+B ORO patinato avorio (gold foil+ivory patina)		C AVORIO decorazioni oro foglia (ivory+gold foil decoration)	D AVORIO (ivory)	€ 10.595,20

FRAME - 214 ART DECO-MIRROR

SPECCHIERA A PARETE
WALL MIRROR

cornice - frame **€ 3.721,30**
ORO FOGLIA o ARGENTO FOGLIA + NERO
GOLD/SILVER-FOIL+BLACK

cornice - frame **€ 3.721,30**
ORO FOGLIA + Rosso Romano/Crema
GOLD-FOIL+Red Romano/Cream

cornice - frame **€ 5.230,50**
BIANCO E NERO LUCIDO
GLOSS BLACK AND WHITE

cornice - frame **€ 4.048,00**
ARGENTO patinato bianco/ORO patinato avorio
silver foil+white patina/gold foil+ivory patina

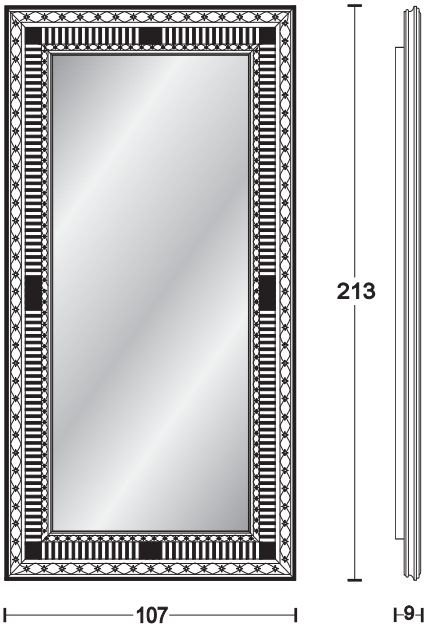

FRAME - 214 ART DECO-SOLO FRAME

SOLO CORNICE
JUST FRAME

cornice - frame **€ 3.397,90**
ORO FOGLIA o ARGENTO FOGLIA + NERO
GOLD/SILVER-FOIL+BLACK

cornice - frame **€ 3.397,90**
ORO FOGLIA + Rosso Romano/Crema
GOLD-FOIL+Red Romano/Cream

cornice - frame **€ 4.895,00**
BIANCO E NERO LUCIDO
GLOSS BLACK AND WHITE

cornice - frame **€ 3.726,80**
ARGENTO patinato bianco/ORO patinato avorio
silver foil+white patina/gold foil+ivory patina

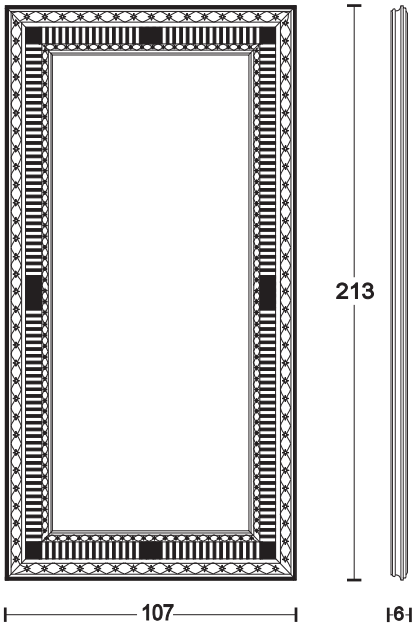

BODY ROUND LIGHT-ART DECO

Corpo illuminante a parete - Wall body light

cornice - frame **€ 3.939,10**
Oro/argento foglia+nero/crema
Gold /silver foil+Black/cream

cornice - frame **€ 4.491,30**
BIANCO E NERO LUCIDO
GLOSS BLACK AND WHITE

cornice - frame **€ 4.066,70**
ARGENTO patinato bianco/ORO patinato avorio
silver foil+white patina/gold foil+ivory patina

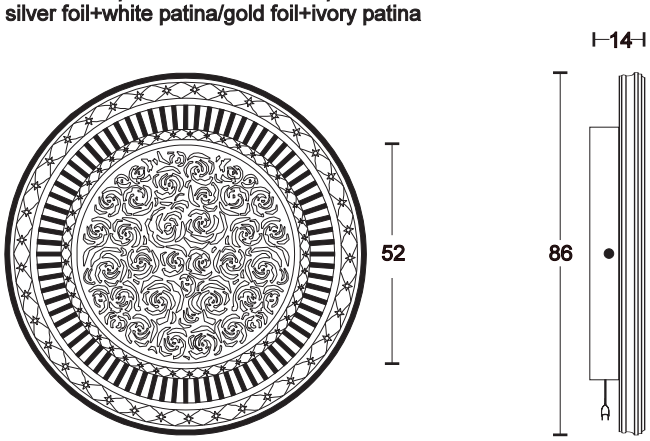

Pannello frontale traforato color Nero/Crema/bianco con tamponatura oro/argento foglia.Completo di interruttore e spina elettrica (220 Volts)
Frontal board in Black/Cream/White colour with gold or silver foil shadings provided with switch and plug (220 volts)

BODY ROUND MIRROR-ART DECO

Specchiera a parete - Wall Mirror

cornice - frame **€ 2.563,00**
Oro/argento foglia+nero/crema
Gold /silver foil+Black/cream

cornice - frame **€ 3.122,90**
BIANCO E NERO LUCIDO
GLOSS BLACK AND WHITE

cornice - frame **€ 2.689,50**
ARGENTO patinato bianco/ORO patinato avorio
silver foil+white patina/gold foil+ivory patina

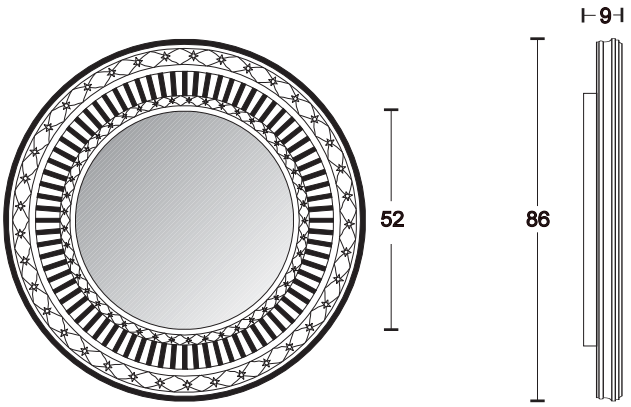

FRAME - 120 ART DECO

Elemento porta CD-DVD a parete
Wall CD-DVD rack

cornice:ORO foglia + NERO - interno:Metalblack (frame:gold foil+black - inside:Metalblack)	€ 2.856,70
cornice:ARGENTO foglia + NERO - interno:Metalblack (frame:silver foil+black - inside:Metalblack)	€ 2.856,70
cornice:ORO foglia+Rosso Romano/Crema interno:Rosso Romano/Crema (frame:Gold foil+Roman red/cream-inside:roman red/cream)	€ 2.856,70
cornice:BIANCO E NERO lucido - interno:BIANCO (frame:gloss black and white - inside:white)	€ 3.822,50
cornice:ARGENTO foglia patinato bianco-interno:BIANCO (frame:silver foil+white patina-inside:white)	€ 3.007,40
cornice:ORO foglia patinato avorio-interno:AVORIO (frame:gold foil+ivory patina-inside:ivory)	€ 3.007,40

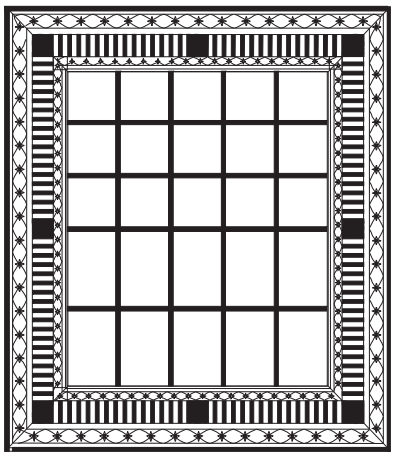

art.: F12-3C3V
234 CD + 90 DVD

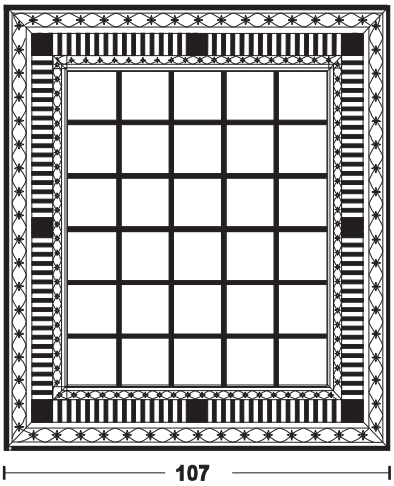

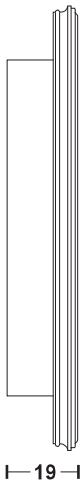

art.: F12-6C
390 CD

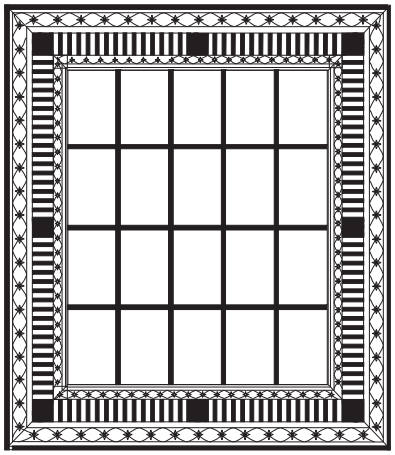

art.:.F12-4V
180 DVD

FRAME 120 ART DECO - MIRROR

Specchiera a parete - Wall Mirror

cornice: ORO foglia + NERO (frame:Gold Foil+Black)	€ 2.477,20
cornice:ARGENTO foglia + NERO (frame:Silver Foil+Black)	€ 2.477,20
cornice:ORO foglia + ROSSO ROMANO/CREMA (frame:Gold Foil+Roman red/cream)	€ 2.477,20
cornice:BIANCO E NERO lucido (frame:gloss black and white)	€ 3.446,30
cornice:ARGENTO foglia patinato bianco (frame: silver foil+white patina)	€ 2.629,00
cornice:ORO foglia patinato avorio (frame:Gold foil+ivory patina)	€ 2.629,00

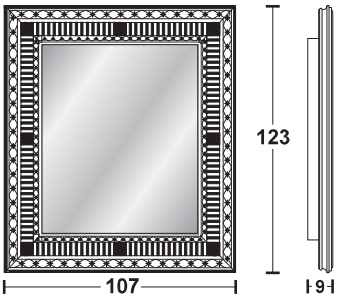

FRAME 120 ART DECO - SOLO FRAME

Solo cornice - Just Frame

cornice: ORO foglia + NERO (frame:Gold Foil+Black)	€ 2.226,40
cornice:ARGENTO foglia + NERO (frame:Silver Foil+Black)	€ 2.226,40
cornice:ORO foglia + ROSSO ROMANO/CREMA (frame:Gold Foil+Roman red/cream)	€ 2.226,40
cornice:BIANCO E NERO lucido (frame:gloss black and white)	€ 3.195,50
cornice:ARGENTO foglia patinato bianco (frame: silver foil+white patina)	€ 2.378,20
cornice:ORO foglia patinato avorio (frame:Gold foil+ivory patina)	€ 2.378,20

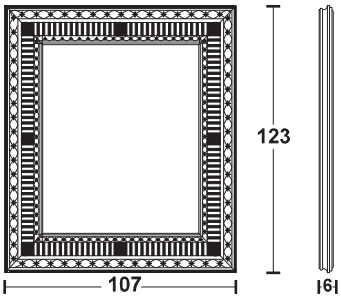

FRAME - 214 ART DECO

Elemento porta CD-DVD a parete
Wall CD-DVD rack

cornice:ORO foglia + NERO - interno:Metalblack **€ 4.335,10**
(frame:gold foil+black - inside:Metalblack)

cornice:ARGENTO foglia + NERO - interno:Metalblack **€ 4.335,10**
(frame:silver foil+black - inside:Metalblack)

cornice:ORO foglia + Rosso Romano/Crema **€ 4.335,10**
interno:Rosso Romano/Crema
(frame:gold foil+Roman Red/Cream - inside:Roman Red/Cream)

cornice:BIANCO E NERO lucido + Crystal stones **€ 5.832,20**
interno:Bianco
(frame:gloss black an white+Crystal stones-Inside:white

cornice:ARGENTO patinato bianco-interno:BIANCO **€ 4.537,50**
(frame:silver foil+white patina-inside:white)

cornice:ORO foglia patinato avorio-interno:AVORIO **€ 4.537,50**
(frame:gold foil+ivory patina-inside:ivory)

art. F214-12C
780 CD

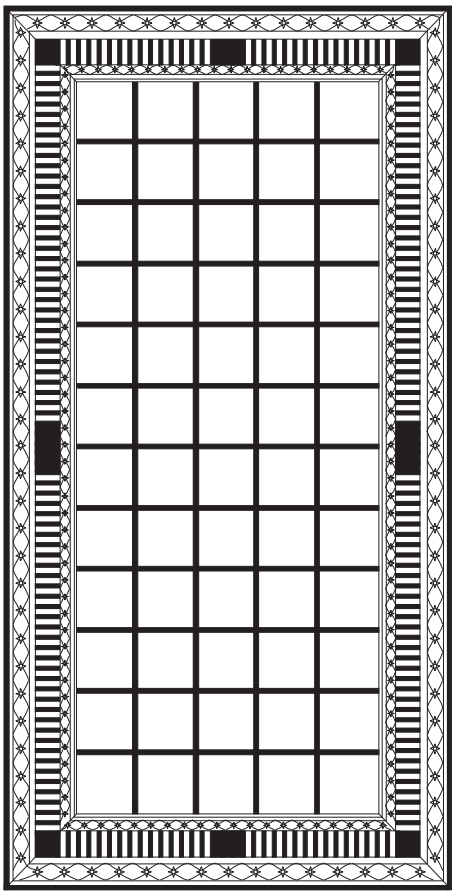

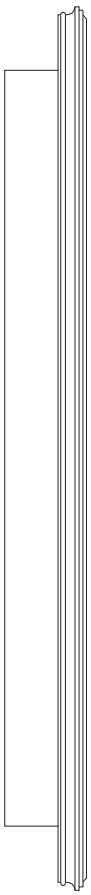

art. F214-9C2V
585 CD+90 DVD

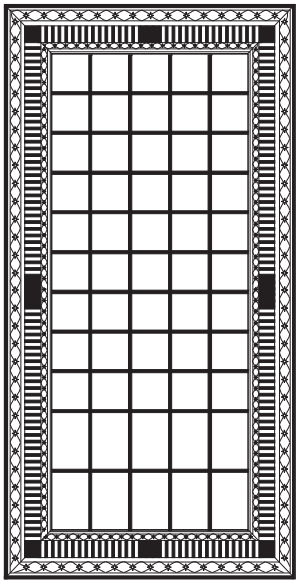

art. F214-6C4V
390 CD+180 DVD

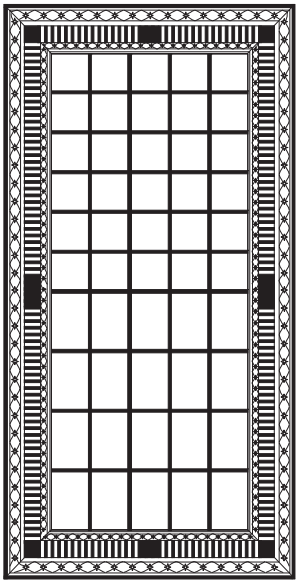

art. F214-3C6V
234 CD+270 DVD

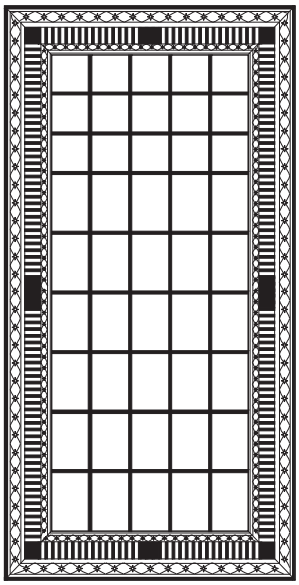

art. F214-8V
360 DVD

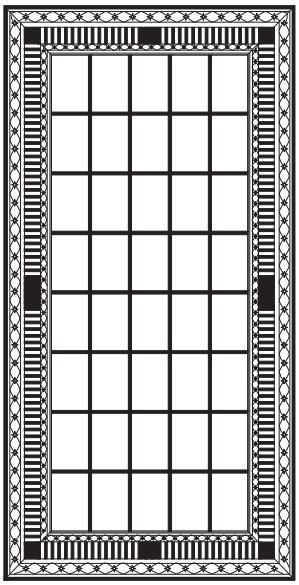

BODY LIGHT - ART DECO

Corpo illuminante a parete
Wall Body-light

Completo di interruttore e spina elettrica (220 Volts)
Provided with switch and plug (220 volts)

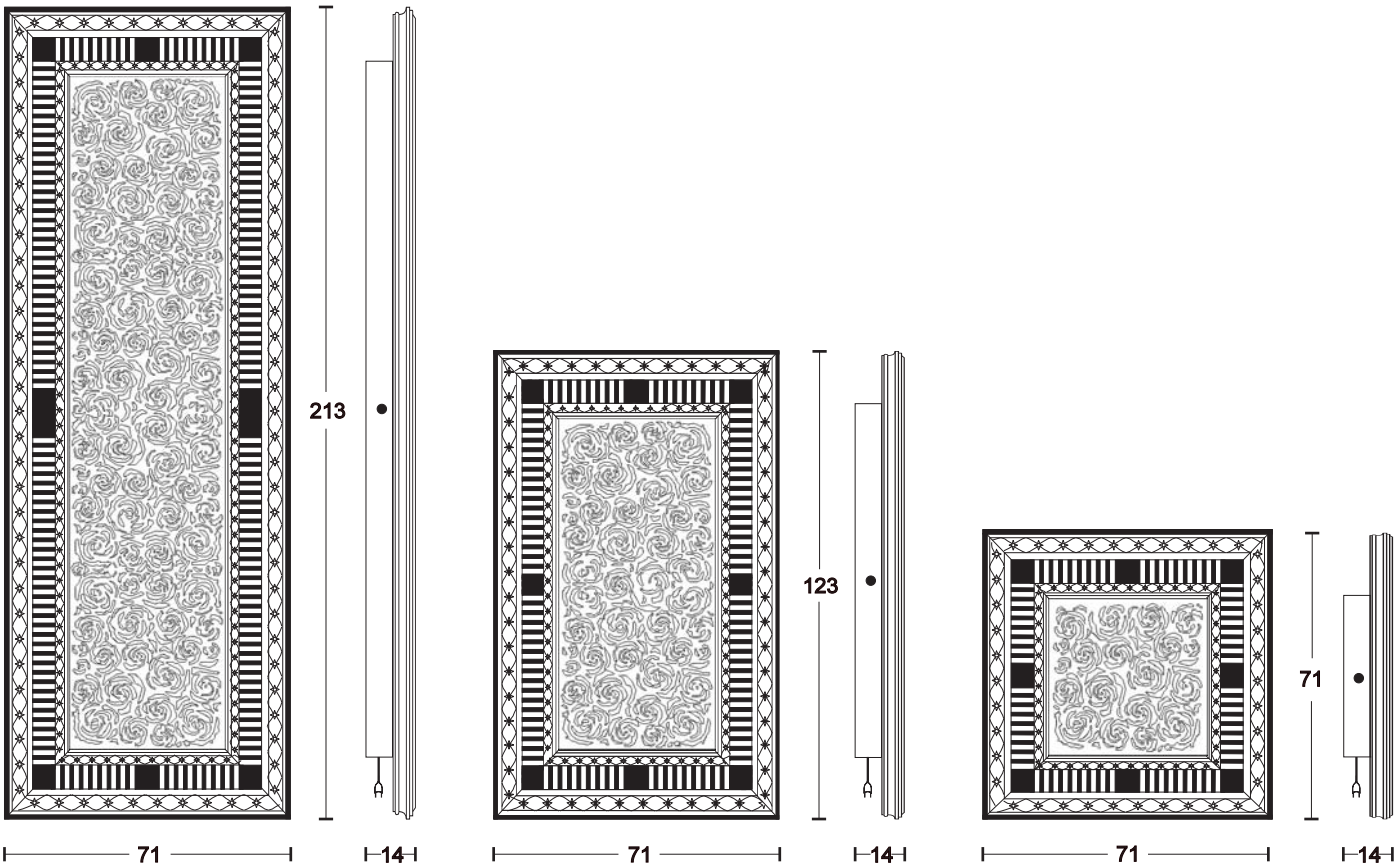

BODY LIGHT 214-ART DECO

cornice - frame **€ 5.332,80**
ORO FOGLIA-NERO/CREMA
Gold foil-black/cream

cornice - frame **€ 5.332,80**
ARGENTO FOGLIA-NERO/CREMA
Silver foil-black/cream

cornice - frame **€ 6.739,70**
BIANCO/NERO lucido
gloss White/black

cornice - frame **€ 5.523,10**
Argento+patina bianco/Oro+patina avorio
Silver foil+white patina/gold foil+ivory patinal

Pannello frontale traforato color Nero o Bianco o Crema o avorio, con tamponatura oro o argento foglia
Frontal board in black or White or Cream or Ivory colour with gold or silver foil shadings

BODY LIGHT 120-ART DECO

cornice - frame **€ 3.836,80**
ORO FOGLIA-NERO/CREMA
Gold foil-black/cream

cornice - frame **€ 3.836,80**
ARGENTO FOGLIA-NERO/CREMA
Silver foil-black/cream

cornice - frame **€ 4.728,90**
BIANCO/NERO lucido
gloss White/black

cornice - frame **€ 3.963,30**
Argento+patina bianco/Oro+patina avorio
Silver foil+white patina/gold foil+ivory patinal

Pannello frontale traforato color Nero o Bianco o Crema o avorio, con tamponatura oro o argento foglia
Frontal board in black or White or Cream or Ivory colour with gold or silver foil shadings

BODY LIGHT 80-ART DECO

cornice - frame **€ 2.356,20**
ORO FOGLIA-NERO/CREMA
Gold foil-black/cream

cornice - frame **€ 2.356,20**
ARGENTO FOGLIA-NERO/CREMA
Silver foil-black/cream

cornice - frame **€ 2.917,20**
BIANCO/NERO lucido
gloss White/black

cornice - frame **€ 2.432,10**
Argento+patina bianco/Oro+patina avorio
Silver foil+white patina/gold foil+ivory patinal

Pannello frontale traforato color Nero o Bianco o Crema o avorio, con tamponatura oro o argento foglia
Frontal board in black or White or Cream or Ivory colour with gold or silver foil shadings

BODY MIRROR - ART DECO

SPECCHIERA A PARETE
WALL MIRROR

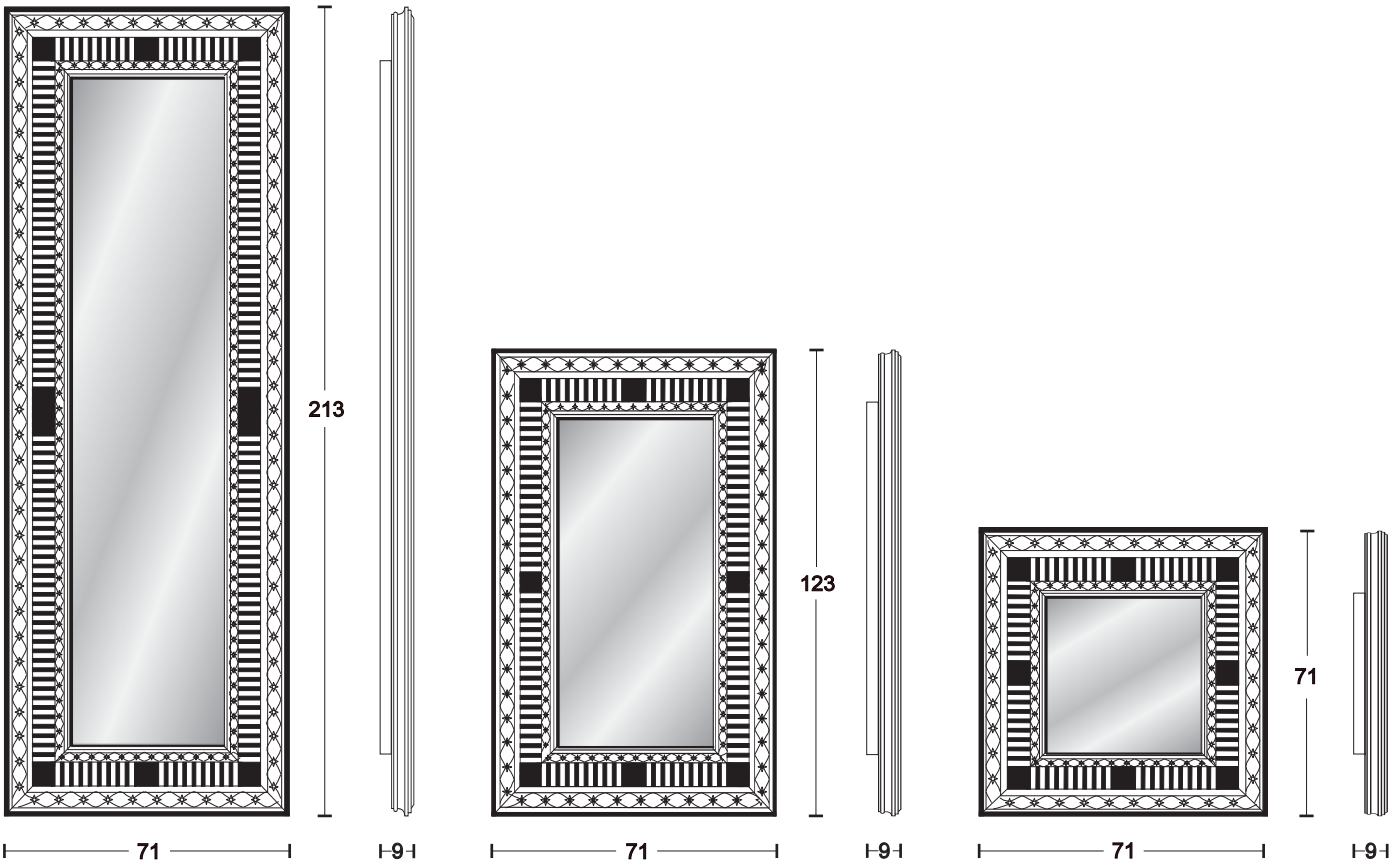

BODY MIRROR 214-ART DECO

Specchiera a parete
Wall Mirror

cornice - frame **€ 3.648,70**
ORO FOGLIA-NERO/CREMA
Gold foil-black/cream

cornice - frame **€ 3.648,70**
ARGENTO FOGLIA-NERO/CREMA
Silver foil-black/cream

cornice - frame **€ 5.105,10**
BIANCO/NERO lucido
gloss White/black

cornice - frame **€ 3.837,90**
Argento+patina bianco/Oro+patina avorio
Silver foil+white patina/gold foil+ivory patinal

BODY MIRROR 120-ART DECO

Specchiera a parete
Wall Mirror

cornice - frame **€ 2.434,30**
ORO FOGLIA-NERO/CREMA
Gold foil-black/cream

cornice - frame **€ 2.434,30**
ARGENTO FOGLIA-NERO/CREMA
Silver foil-black/cream

cornice - frame **€ 3.334,10**
BIANCO/NERO lucido
gloss White/black

cornice - frame **€ 2.559,70**
Argento+patina bianco/Oro+patina avorio
Silver foil+white patina/gold foil+ivory patinal

BODY MIRROR 80-ART DECO

Specchiera a parete
Wall Mirror

cornice - frame **€ 1.948,10**
ORO FOGLIA-NERO/CREMA
Gold foil-black/cream

cornice - frame **€ 1.948,10**
ARGENTO FOGLIA-NERO/CREMA
Silver foil-black/cream

cornice - frame **€ 2.497,00**
BIANCO/NERO lucido
gloss White/black

cornice - frame **€ 2.024,00**
Argento+patina bianco/Oro+patina avorio
Silver foil+white patina/gold foil+ivory patinal

SHINING SUN - ART DECO

Corpo illuminante a parete - Wall Body light

cornice:Oro/Arg Foglia+Nero/Rosso Romano/Crema **€ 5.480,20**
frame:Gold/Silver Foil+Black/Rosso Romano/Cream

cornice:Bianco e Nero lucido **€ 6.388,80**
frame:Gloss Black and White

cornice:Oro/argento patinato avorio/bianco **€ 5.667,20**
frame:gold/silver foil+ivory/white patina

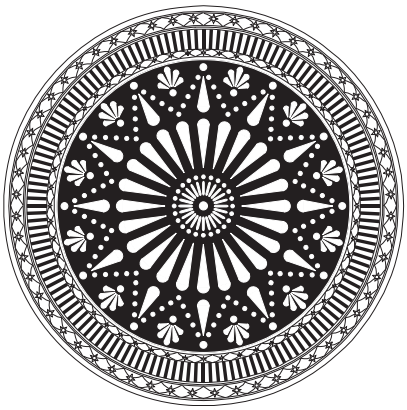

Pannello frontale traforato Nero/Crema/Rosso Romano/Bianco
Completo di interruttore e spina (220 Volts)
Frontal board in black/Cream/Rosso Romano/White
provided with switch and plug (220 volts)

SHINING SUN - ART DECO - mirror

Specchiera a parete - Wall mirror

cornice:Oro/Arg Foglia+Nero/Rosso Romano/Crema **€ 3.835,70**
frame:Gold/Silver Foil+Black/Rosso Romano/Cream

cornice:Bianco e Nero lucido **€ 4.742,10**
frame:Gloss Black and White

cornice:Oro/argento patinato avorio/bianco **€ 4.022,70**
frame:gold/silver foil+ivory/white patina

SITTING CASE - ART DECO

Cassapanca - Sitting case

Struttura-Structure: oro/arg foglia+nero/rosso romano/crema- **€ 6.205,10**
gold/silver foil+black/roman red/cream
Pannelli traforati-Frontal panels: Nero/rosso romano/crema-Black/roman red/cream
Piano chiusura-opening top:Metalblack/rosso romano/Crema-Metalblack/roman red/cream
completo di ammortizzatori-with shock absorber

Struttura-Structure: Bianco/Nero Lucido-gloss White **€ 7.729,70**
Pannelli traforati-Frontal panel: Bianco/Nero-white/black
Piano chiusura-opening top:Bianco/nero-white/black
Completo di ammortizzatori-with Shock absorber

Struttura-Structure:oro/argento+patina avorio/bianco-gold/silver foil+ivory/white patina. **€ 6.458,10**
Pannelli traforati-Frontal panels: avorio/bianco-Ivory/white
Piano chiusura-opening top:Avorio/bianco+decorio oro/argento-Ivory/white+gold/silver foil decoration
completo di ammortizzatori-with shock absorber

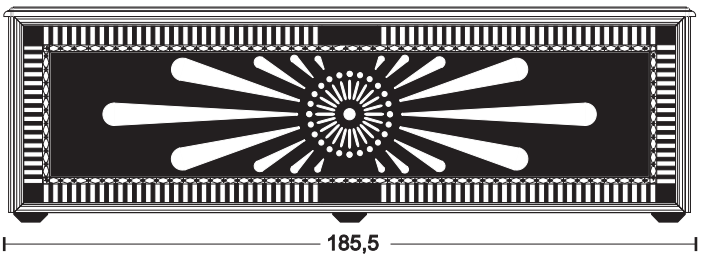

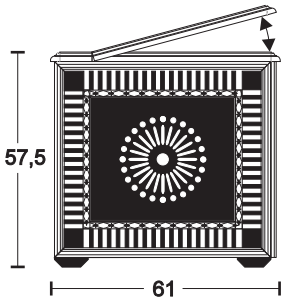

TRAYS

OPTIONAL:
Coppia vassoi scorrevoli - METALTITANIO
Couple of sliding trays - METALTITANIO

€ 663,30

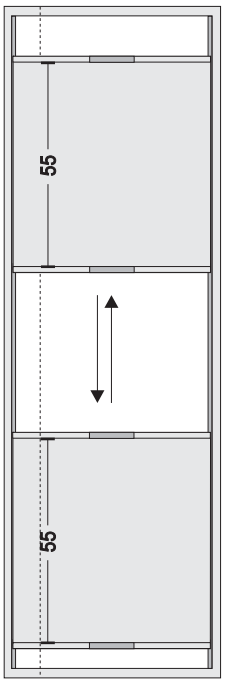

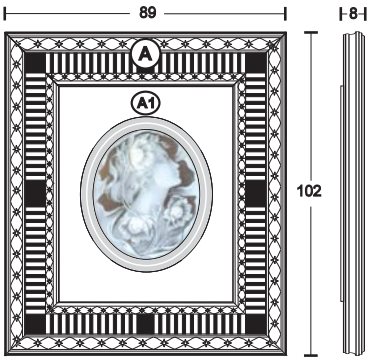

CAMMEO

Ovale con Cammeo (Sinistro o destro)
Oval with Cameo (Left or Right)

Ⓐ Oro/Argento Foglia+nero/crema/bianco-Gold/Silver foil+black/cream/white
Ⓐ1 tutti i laccati opachi-all opaque laquering **€ 2.629,00**

Ⓐ Nero e Bianco Lucido - Gloss White and Black
Ⓐ1 tutti i laccati opachi-all opaque laquering **€ 3.294,50**

Ⓐ Oro/argento patinato avorio/bianco - gold/silver foil+ivory/white patina
Ⓐ1 Avorio/Bianco - Ivory/White **€ 2.757,70**

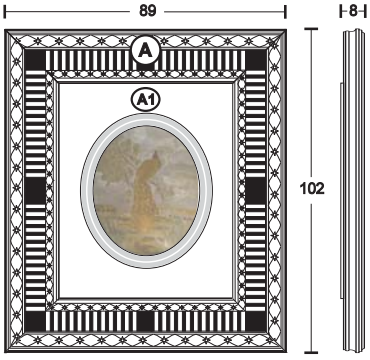

PAVONE

Ovale con Pavone Artistico oro 23/22/20/18/16/12 Carati (Sinistro o destro)
Oval with Artistic peacock Gold 23/22/20/18/16/12 carats (Left or Right)

Ⓐ Oro/Argento Foglia+nero/crema/bianco-Gold/Silver foil+black/cream/white
Ⓐ1 tutti i laccati opachi-all opaque laquering **€ 4.449,50**

Ⓐ Nero e Bianco Lucido - Gloss White and Black
Ⓐ1 tutti i laccati opachi-all opaque laquering **€ 5.112,80**

Ⓐ Oro/argento patinato avorio/bianco - gold/silver foil+ivory/white patina
Ⓐ1 Avorio/Bianco - Ivory/White **€ 4.579,30**

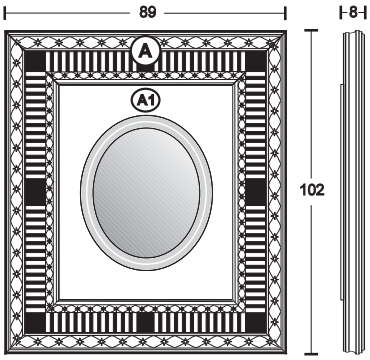

OVAL MIRROR

Ovale con specchio bisellato
Oval with bevelled mirror

Ⓐ Oro/Argento Foglia+nero/crema/bianco-Gold/Silver foil+black/cream/white
Ⓐ1 tutti i laccati opachi-all opaque laquering **€ 2.417,80**

Ⓐ Nero e Bianco Lucido - Gloss White and Black
Ⓐ1 tutti i laccati opachi-all opaque laquering **€ 3.081,10**

Ⓐ Oro/argento patinato avorio/bianco - gold/silver foil+ivory/white patina
Ⓐ1 Avorio/Bianco - Ivory/White **€ 2.543,20**

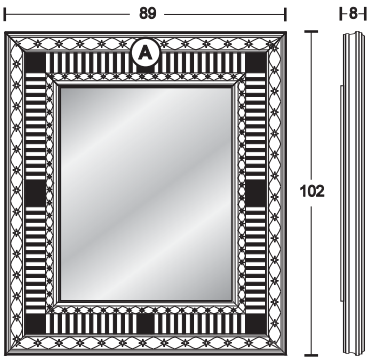

MIRROR

Specchio anticato o normale
Antique mirror or standard

Ⓐ Oro/Argento Foglia+nero/crema/bianco-Gold/Silver foil+black/cream/white **€ 2.470,60**

Ⓐ Nero e Bianco Lucido - Gloss White and Black **€ 3.135,00**

Ⓐ Oro/argento patinato avorio/bianco - gold/silver foil+ivory/white patina **€ 2.599,30**

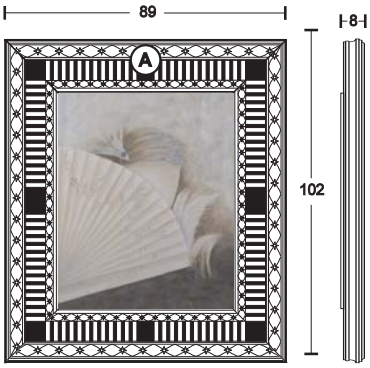

THE FAN

Dipinto materico "Donna con Ventaglio" (Sinistro o destro)
Hand-made Materic painting "Donna con Ventaglio" (Left or Right)

Ⓐ Oro/Argento Foglia+nero/crema/bianco-Gold/Silver foil+black/cream/white **€ 2.737,90**

Ⓐ Nero e Bianco Lucido - Gloss White and Black **€ 3.401,20**

Ⓐ Oro/argento patinato avorio/bianco - gold/silver foil+ivory/white patina **€ 2.865,50**

CIAIKA -170 ART DECO

Tavolino porta CD/DVD per 800 Cd (e/o 378 DVD)
Coffee table CD/DVD rack for 800 CD (and or 378 DVD)

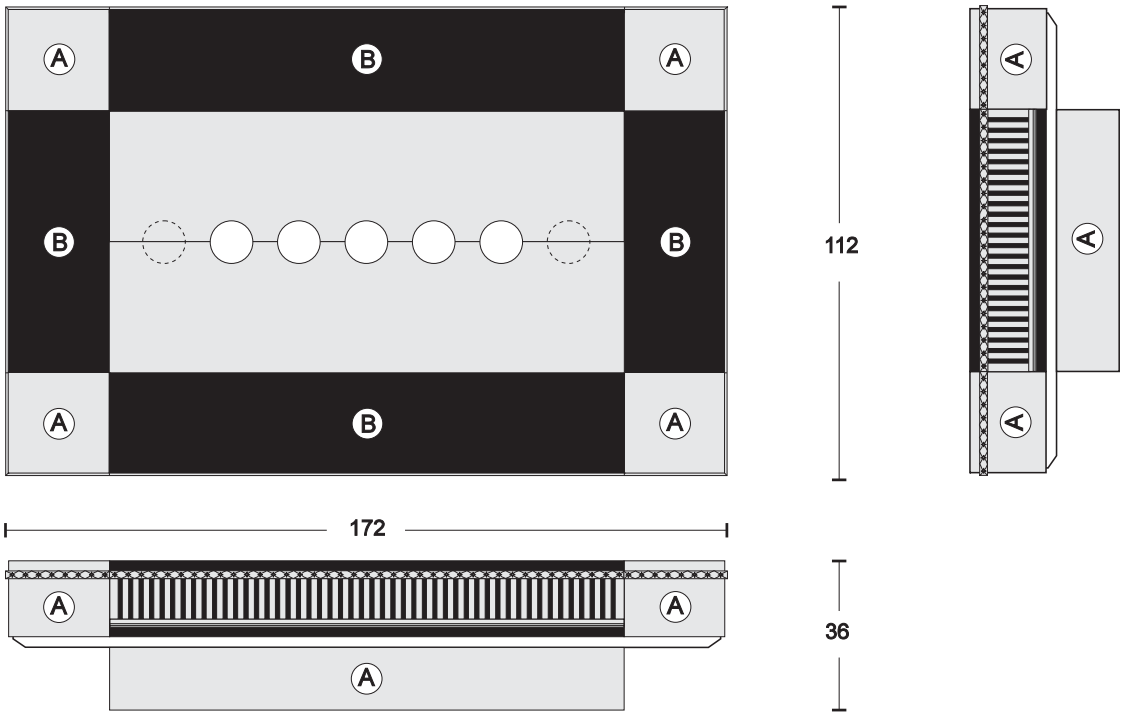

Finiture esterne standard
Outside Standard finishings

(A) ORO FOGLIA (gold foil)	(B) METALBLACK + (oro foglia-gold foil)	€ 6.547,20
(A) ORO FOGLIA (gold foil)	(B) ROSSO ROMANO + (oro foglia-gold foil)	€ 6.547,20
(A) ARGENTO FOGLIA (silver foil)	(B) METALBLACK + (argento foglia-silver foil)	€ 6.547,20
(A) ORO FOGLIA (gold foil)	(B) CREMA(Cream) + (oro foglia-gold foil)	€ 6.547,20
(A) BIANCO OPACO (opaque white)	(B) bianco e nero lucido (gloss black and white)	€ 7.411,80
(A) ARGENTO FOGLIA patinato BIANCO (silver foil+white patina)	(B) BIANCO (white)	€ 6.743,00
(A) ORO FOGLIA patinato AVORIO (gold foil+ivory patina)	(B) AVORIO (Ivory)	€ 6.743,00

Finitura superfici interne: METALSILVER o METALGOLD
Finishings of inside surface: METALSILVER or METALGOLD

CIAIKA -110 ART DECO

Tavolino porta CD/DVD per 490 Cd (e/o 218 DVD)
Coffe table CD/DVD rack for 490 CD (and or 218 DVD)

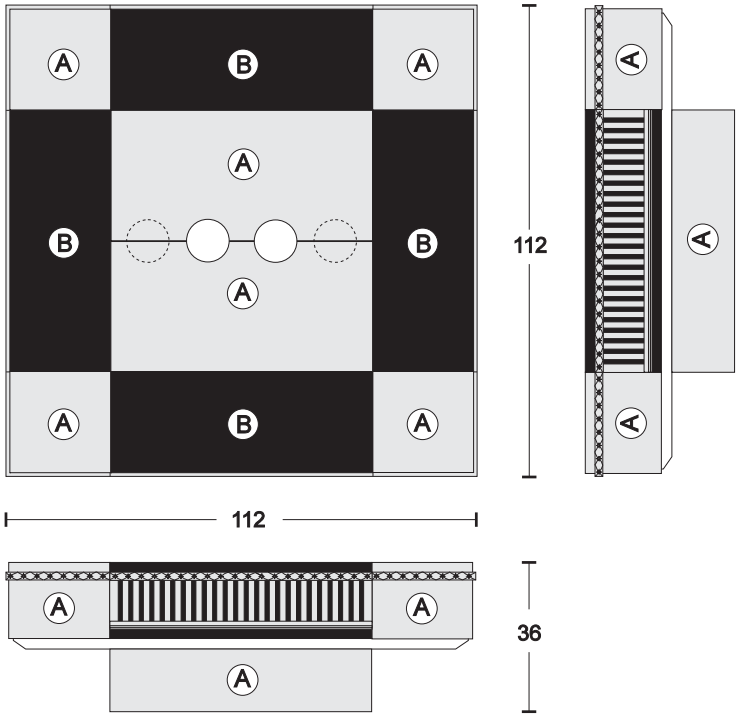

Finiture esterne standard
Outside Standard finishings

A ORO FOGLIA (gold foil)	B METALBLACK +(oro foglia-gold foil)	€ 5.250,30
A ORO FOGLIA (gold foil)	B ROSSO ROMANO +(oro foglia-gold foil)	€ 5.250,30
A ARGENTO FOGLIA (silver foil)	B METALBLACK +(argento foglia-silver foil)	€ 5.250,30
A ORO FOGLIA (gold foil)	B CREMA (Cream) + (oro foglia-gold foil)	€ 5.250,30
A BIANCO OPACO (opaque white)	B bianco e nero lucido (gloss black and white)	€ 5.913,60
A ARGENTO patina bianca (silver foil+white patina)	B BIANCO (white)	€ 5.414,20
A ORO+patina avorio (gold foil+ivory patina)	B AVORIO (ivory)	€ 5.414,20

Finitura superfici interne: METALSILVER o METALGOLD
Finishings of inside surface: METALSILVER or METALGOLD

CIAIKA - 110 SLIM - ART DECO

Tavolino porta CD/DVD per 180 Cd (e/o 92 DVD)
Coffe table CD/DVD rack for 180 CD (and or 92 DVD)

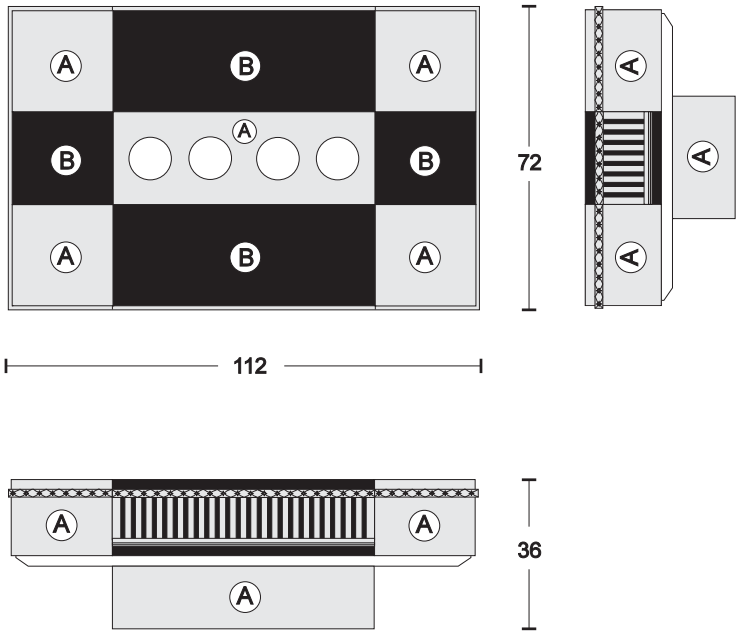

Finiture esterne standard
Outside Standard finishings

A ORO FOGLIA (gold foil)	B METALBLACK +(oro foglia-gold foil)	€ 4.719,00
A ORO FOGLIA (gold foil)	B ROSSO ROMANO +(oro foglia-gold foil)	€ 4.719,00
A ARGENTO FOGLIA (silver foil)	B METALBLACK +(argento foglia-silver foil)	€ 4.719,00
A ORO FOGLIA (gold foil)	B CREMA (Cream) + (oro foglia-gold foil)	€ 4.719,00
A BIANCO OPACO (opaque white)	B bianco e nero lucido (gloss black and white)	€ 5.250,30
A ARGENTO patina bianca (silver foil+white patina)	B BIANCO (white)	€ 4.870,80
A ORO+patina avorio (gold foil+ivory patina)	B AVORIO (ivory)	€ 4.870,80

Finitura superfici interne: METALSILVER o METALGOLD
Finishings of inside surface: METALSILVER or METALGOLD

1 WINDOWS - COFFEE TABLE - ART DECO

Tavolino contenitore con vassoi estraibili - Coffee table container removable tray

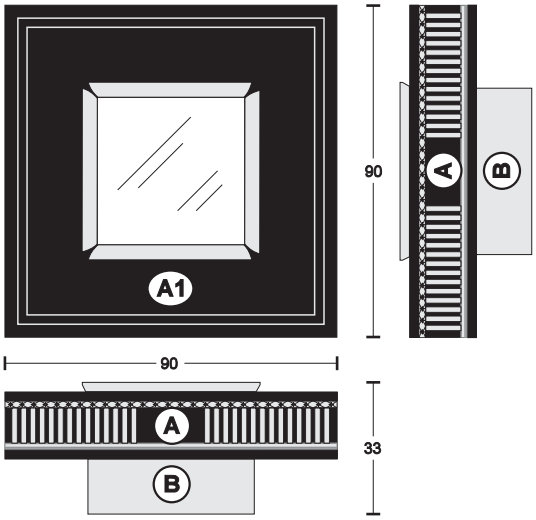

A1 tutti i laccati opachi, decori oro/argento foglia
All opaque laquering, decoration gold/silver foil

A Tutti laccati lucidi, decori oro/argento foglia
vassoi in vetro temperato maniglie oro/argento foglia
All gloss laquering, decoration gold/silver foil
Ardened Glass Trays handles gold/silver foil

B tutti i laccati opachi-All opaque laquering

€ 2.860,00

A1 Bianco opaco decori Nero
Opaque White, decoration black

A Bianco+Nero lucido
vassoi in vetro temperato,maniglie nero opaco
Gloss White+Black,
Ardened Glass Trays handles black opaque

B Bianco/Nero-black/white

€ 3.744,40

A1 Avorio/bianco + decorazioni oro/argento foglia
Ivory/white + gold/silver foil decorations

A Oro/argento patinato avorio/bianco
vassoi in vetro temperato,maniglie oro/argento patinato avorio/bianco
gold/silver foil+ivory/white patina
ardened Glass Trays handles gold/silver foil+ivory/white patina

B Metalgold/Metalsilver

€ 3.049,20

2 WINDOWS - COFFEE TABLE - ART DECO

Tavolino contenitore con vassoi estraibili - Coffee table container removable tray

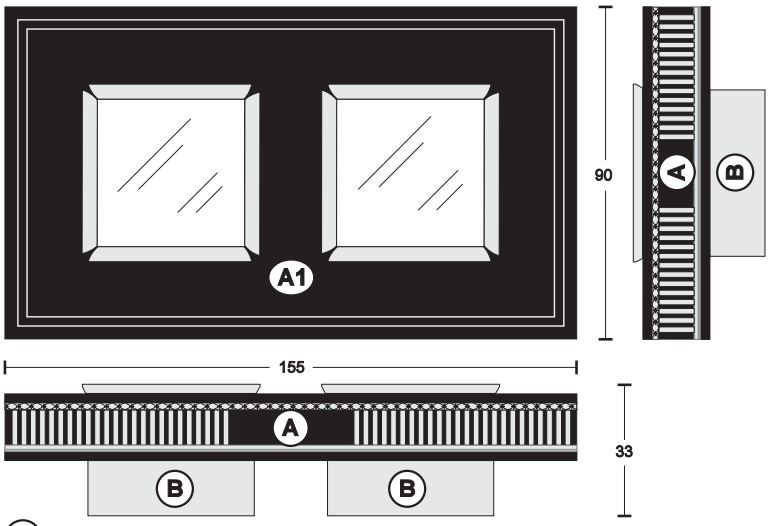

A Tutti laccati lucidi - decori oro/argento foglia - vassoi in vetro temperato - maniglie oro/argento foglia **€ 4.581,50**
All Gloss laquering - decoration gold/silver foil - Ardened Glass Trays - handles gold/silver foil

B tutti i laccati opachi-All opaque laquering A1 tutti i laccati opachi, decori oro/argento foglia - All opaque laquering decoration gold/silver foil

A Bianco+Nero lucido - vassoi in vetro temperato - maniglie nero opaco **€ 5.791,50**
Gloss White+Black - Ardened Glass Trays - handles black opaque

B Bianco/Nero-black/white A1 Bianco opaco decori Nero - Opaque White, decoration black

A Oro/argento patinato avorio/bianco - vassoi in vetro temperato,maniglie oro/argento patinato avorio/bianco **€ 4.832,30**
gold/silver foil+ivory/white patina - ardened Glass Trays handles gold/silver foil+ivory/white patina

B Metalgold/Metalsilver A1 Avorio/bianco + decorazioni oro/argento foglia - Ivory/white + gold/silver foil decorations

4 WINDOWS - COFFEE TABLE - ART DECO

Tavolino contenitore con vassoi estraibili - Coffee table container removable tray

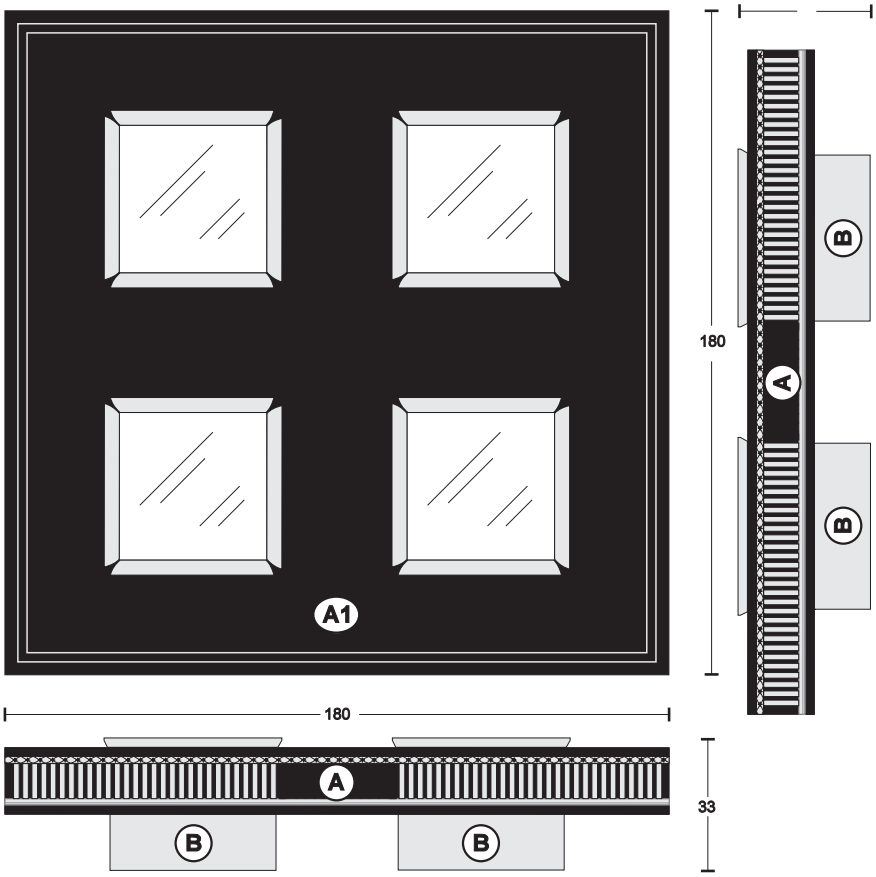

(A1) tutti i laccati opachi, decori oro/argento foglia
All opaque laquering, decoration gold/silver foil

(A) Tutti laccati lucidi,
decori oro/argento foglia-vassoi in vetro temperato
maniglie oro/argento foglia
All gloss laquering,
decoration gold/silver foil - Ardened Glass Trays
handles gold/silver foil

(B) tutti i laccati opachi-All opaque laquering

€ 8.162,00

(A1) Bianco opaco decori Nero
Opaque White, decoration black

(A) Bianco+Nero lucido
vassoi in vetro temperato,
maniglie nero opaco
Gloss White+Black,
Ardened Glass Trays
handles black opaque

(B) Bianco/Nero-black/white

€ 9.966,00

(A1) Avorio/bianco + decorazioni oro/argento foglia
Ivory/white + gold/silver foil decorations

(A) Oro/argento patinato avorio/bianco
vassoi in vetro temperato,
maniglie oro/argento patinato avorio/bianco
gold/silver foil+ivory/white patina
ardened Glass Trays
handles gold/silver foil+ivory/white patina

(B) Metalgold/Metalsilver

€ 8.665,80

3 WINDOWS - COFFEE TABLE - ART DECO

Tavolino contenitore con vassoi estraibili - Coffee table container removable tray

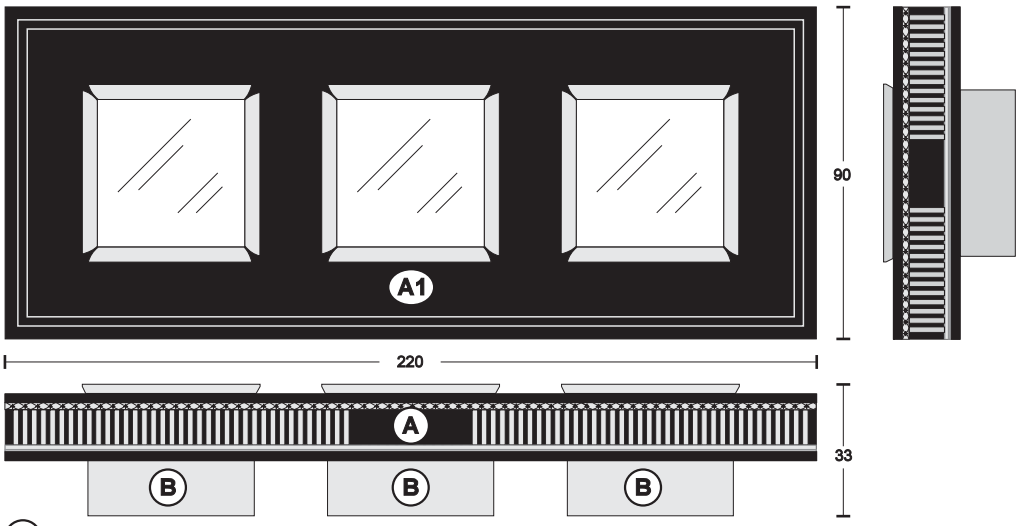

(A) Tutti laccati lucidi - decori oro/argento foglia - vassoi in vetro temperato - maniglie oro/argento foglia
All Gloss laquering - decoration gold/silver foil - Ardened Glass Trays - handles gold/silver foil — € 6.490,00

(B) tutti i laccati opachi-All opaque laquering (A1) tutti i laccati opachi, decori oro/argento foglia - All opaque laquering decoration gold/silver foil

(A) Bianco+Nero lucido - vassoi in vetro temperato - maniglie nero opaco
Gloss White+Black - Ardened Glass Trays - handles black opaque — € 8.250,00

(B) Bianco/Nero-black/white (A1) Bianco opaco decori Nero - Opaque White, decoration black

(A) Oro/argento patinato avorio/bianco - vassoi in vetro temperato,maniglie oro/argento patinato avorio/bianco
gold/silver foil+ivory/white patina - ardened Glass Trays handles gold/silver foil+ivory/white patina — € 6.869,50

(B) Metalgold/Metalsilver (A1) Avorio/bianco + decorazioni oro/argento foglia - Ivory/white + gold/silver foil decorations

FLOWER 60 - ART DECO

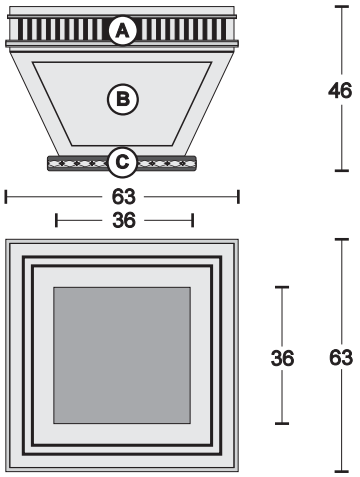

Finiture - finishings

(A) oro/argento foglia(gold/silver foil)+tutti i laccati(all our laquering) € 2.115,30
decorazioni-decorations:tutti i laccati(all our laquering)

(B) oro/argento foglia(gold/silver foil)+tutti i laccati(all our laquering)
decorazioni-decorations:oro/argento foglia/tutti i laccati(gold/silver foil/all our laquering)

(C) Tutti i laccati(all our laquering)
decorazioni-decorations:oro/argento foglia(gold/silver foil)

(A)+(C) Nero Lucido/Bianco Lucido(Gloss black/White) € 2.365,00
(B) Bianco(white)+decorazioni(decorations):nero(black)

(A) Oro/argento patinato avorio/bianco(gold/silver foil+Ivory/white patina) € 2.214,30

(B) Avorio/bianco+decorazioni oro/argento foglia
(Ivory/white+gold/silver foil decorations)

(C) Avorio/bianco+decorazioni oro/argento foglia
(Ivory/white+gold/silver foil decorations)

Completo di vasca metallica zincata-including galvanized metal tank

VASE 90 - ART DECO

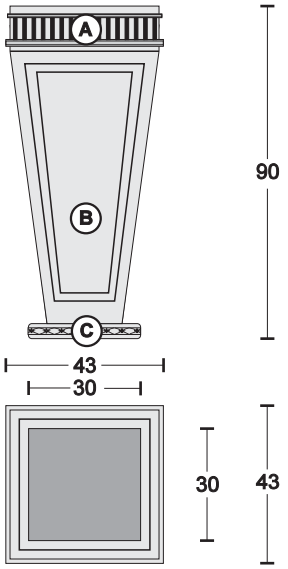

Finiture - finishings

(A) oro/argento foglia(gold/silver foil)+tutti i laccati(all our laquering) € 2.081,20
decorazioni-decorations:tutti i laccati(all our laquering)

(B) oro/argento foglia(gold/silver foil)+tutti i laccati(all our laquering)
decorazioni-decorations:oro/argento foglia/tutti i laccati(gold/silver foil/all our laquering)

(C) Tutti i laccati(all our laquering)
decorazioni-decorations:oro/argento foglia(gold/silver foil)

(A)+(C) Nero Lucido/Bianco Lucido(Gloss black/White) € 2.335,30
(B) Bianco(white)+decorazioni(decorations):nero(black)

(A) Oro/argento patinato avorio/bianco(gold/silver foil+Ivory/white patina) € 2.189,00

(B) Avorio/bianco+decorazioni oro/argento foglia
(Ivory/white+gold/silver foil decorations)

(C) Avorio/bianco+decorazioni oro/argento foglia
(Ivory/white+gold/silver foil decorations)

Completo di vasca metallica zincata-including galvanized metal tank

VASE 125 - ART DECO

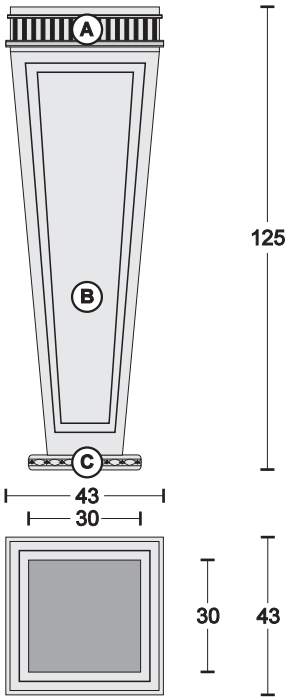

Finiture - finishings

(A) oro/argento foglia(gold/silver foil)+tutti i laccati(all our laquering) € 2.359,50
decorazioni-decorations:tutti i laccati(all our laquering)

(B) oro/argento foglia(gold/silver foil)+tutti i laccati(all our laquering)
decorazioni-decorations:oro/argento foglia/tutti i laccati(gold/silver foil/all our laquering)

(C) Tutti i laccati(all our laquering)
decorazioni-decorations:oro/argento foglia(gold/silver foil)

(A)+(C) Nero Lucido/Bianco Lucido(Gloss black/White) € 2.623,50
(B) Bianco(white)+decorazioni(decorations):nero(black)

(A) Oro/argento patinato avorio/bianco(gold/silver foil+Ivory/white patina) € 2.467,30

(B) Avorio/bianco+decorazioni oro/argento foglia
(Ivory/white+gold/silver foil decorations)

(C) Avorio/bianco+decorazioni oro/argento foglia
(Ivory/white+gold/silver foil decorations)

Completo di vasca metallica zincata-including galvanized metal tank

FLOWER 60 - BRAZIER - ART DECO

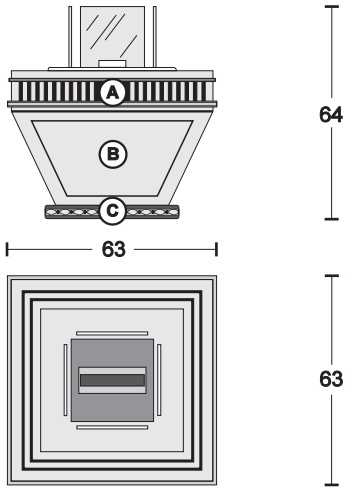

Finiture - finishings

(A) oro/argento foglia(gold/silver foil)+tutti i laccati(all our laquering) € 3.759,80
decorazioni-decorations:tutti i laccati(all our laquering)

(B) oro/argento foglia(gold/silver foil)+tutti i laccati(all our laquering)
decorazioni-decorations:oro/argento foglia/tutti i laccati(gold/silver foil/all our laquering)

(C) Tutti i laccati(all our laquering)
decorazioni-decorations:oro/argento foglia(gold/silver foil)

(A)+(C) Nero Lucido/Bianco Lucido(Gloss black/White) € 3.896,20
(B) Bianco(white)+decorazioni(decorations):nero(black)

(A) Oro/argento patinato avorio/bianco(gold/silver foil+Ivory/white patina) € 3.858,80

(B) Avorio/bianco+decorazioni oro/argento foglia
(Ivory/white+gold/silver foil decorations)

(C) Avorio/bianco+decorazioni oro/argento foglia
(Ivory/white+gold/silver foil decorations)

Con braciere a bio-alcol removibile e vetri temperati-complete with bio-alcol brazier and tempered glass

VASE 90 - BRAZIER - ART DECO

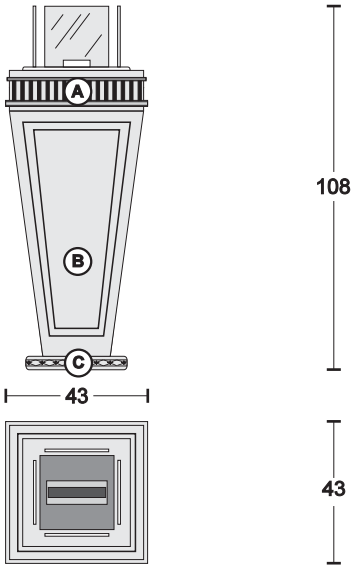

Finiture - finishings

(A) oro/argento foglia(gold/silver foil)+tutti i laccati(all our laquering) € 3.625,60
decorazioni-decorations:tutti i laccati(all our laquering)

(B) oro/argento foglia(gold/silver foil)+tutti i laccati(all our laquering)
decorazioni-decorations:oro/argento foglia/tutti i laccati(gold/silver foil/all our laquering)

(C) Tutti i laccati(all our laquering)
decorazioni-decorations:oro/argento foglia(gold/silver foil)

(A)+(C) Nero Lucido/Bianco Lucido(Gloss black/White) € 3.868,70
(B) Bianco(white)+decorazioni(decorations):nero(black)

(A) Oro/argento patinato avorio/bianco(gold/silver foil+Ivory/white patina) € 3.731,20

(B) Avorio/bianco+decorazioni oro/argento foglia
(Ivory/white+gold/silver foil decorations)

(C) Avorio/bianco+decorazioni oro/argento foglia
(Ivory/white+gold/silver foil decorations)

Con braciere a bio-alcol removibile e vetri temperati-complete with bio-alcol brazier and tempered glass

VASE 125 - BRAZIER - ART DECO

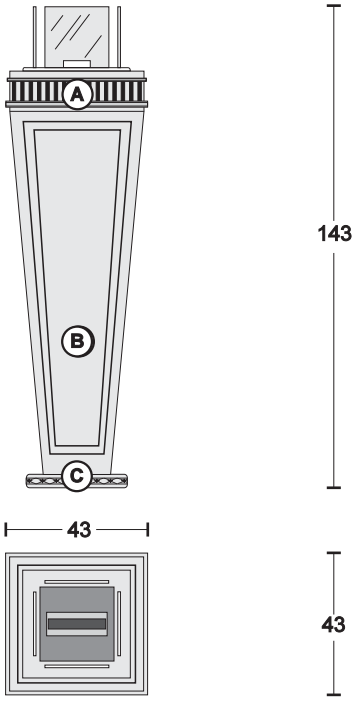

Finiture - finishings

(A) oro/argento foglia(gold/silver foil)+tutti i laccati(all our laquering) € 3.890,70
decorazioni-decorations:tutti i laccati(all our laquering)

(B) oro/argento foglia(gold/silver foil)+tutti i laccati(all our laquering)
decorazioni-decorations:oro/argento foglia/tutti i laccati(gold/silver foil/all our laquering)

(C) Tutti i laccati(all our laquering)
decorazioni-decorations:oro/argento foglia(gold/silver foil)

(A)+(C) Nero Lucido/Bianco Lucido(Gloss black/White) € 4.141,50
(B) Bianco(white)+decorazioni(decorations):nero(black)

(A) Oro/argento patinato avorio/bianco(gold/silver foil+Ivory/white patina) € 3.997,40

(B) Avorio/bianco+decorazioni oro/argento foglia
(Ivory/white+gold/silver foil decorations)

(C) Avorio/bianco+decorazioni oro/argento foglia
(Ivory/white+gold/silver foil decorations)

Con braciere a bio-alcol removibile e vetri temperati-complete with bio-alcol brazier and tempered glass

CHEST-NOUVEAU-282 ART DECO DIVANO - SOFA

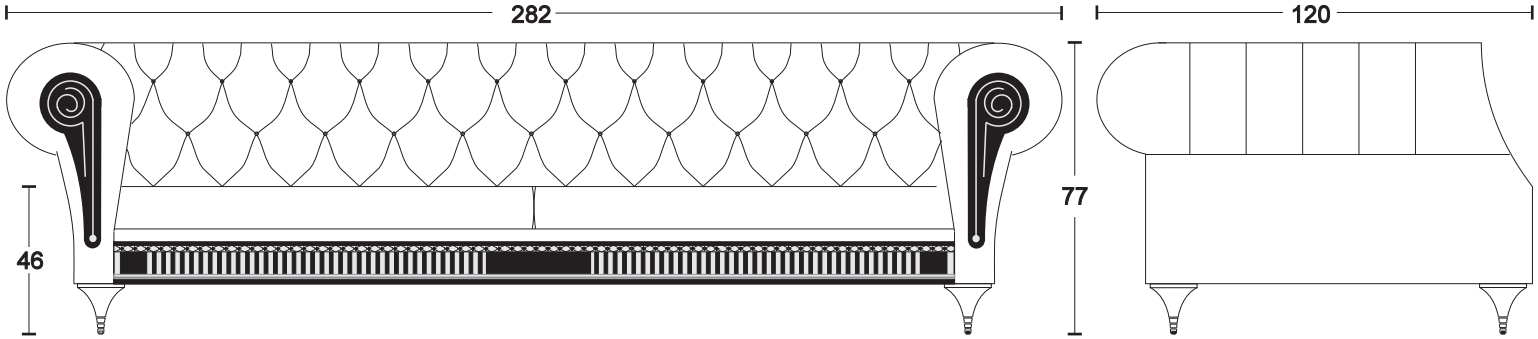

Pelle-Leather cat."SOFT"	Pelle-Leather cat."EXTRA"	Pelle-Leather cat."GLAM"
€ 14.080,00	€ 15.383,50	€ 16.799,20
Black & White Decor € 14.586,00	Black & White Decor € 15.889,50	Black & White Decor € 17.305,20
Eco Nabuk Eco Nubuk	Velluto Velvet	
€ 12.131,90	€ 13.567,40	
Black & White Decor € 12.637,90	Black & White Decor € 14.073,40	

CHEST-NOUVEAU-209 ART DECO DIVANO - SOFA

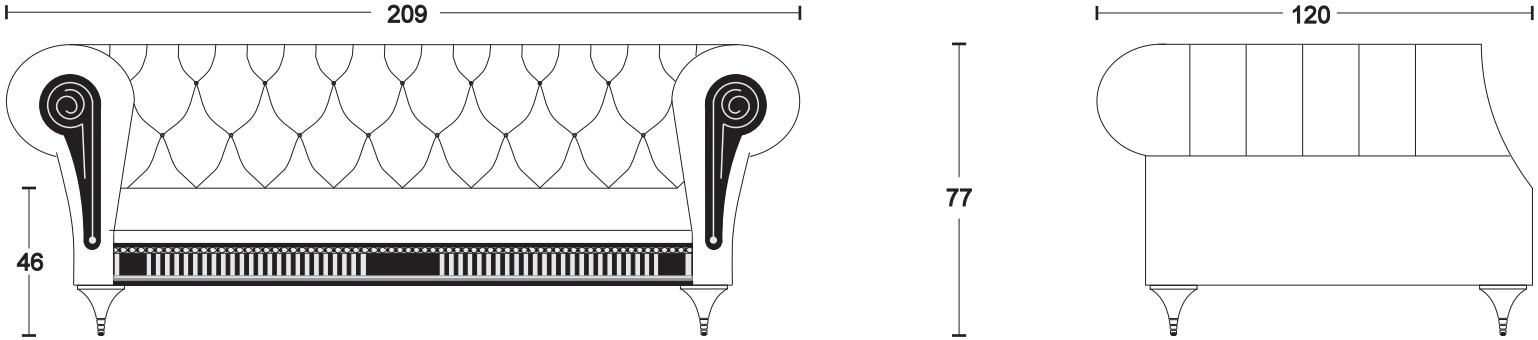

Pelle-Leather cat."SOFT"	Pelle-Leather cat."EXTRA"	Pelle-Leather cat."GLAM"
€ 11.220,00	€ 12.232,00	€ 13.447,50
Black & White Decor € 11.599,50	Black & White Decor € 12.611,50	Black & White Decor € 13.865,50
Eco Nabuk Eco Nubuk	Velluto Velvet	
€ 9.765,80	€ 10.818,50	
Black & White Decor € 10.145,30	Black & White Decor € 11.198,00	

CHEST-NOUVEAU-123 ART DECO POLTRONA - ARMCHAIR

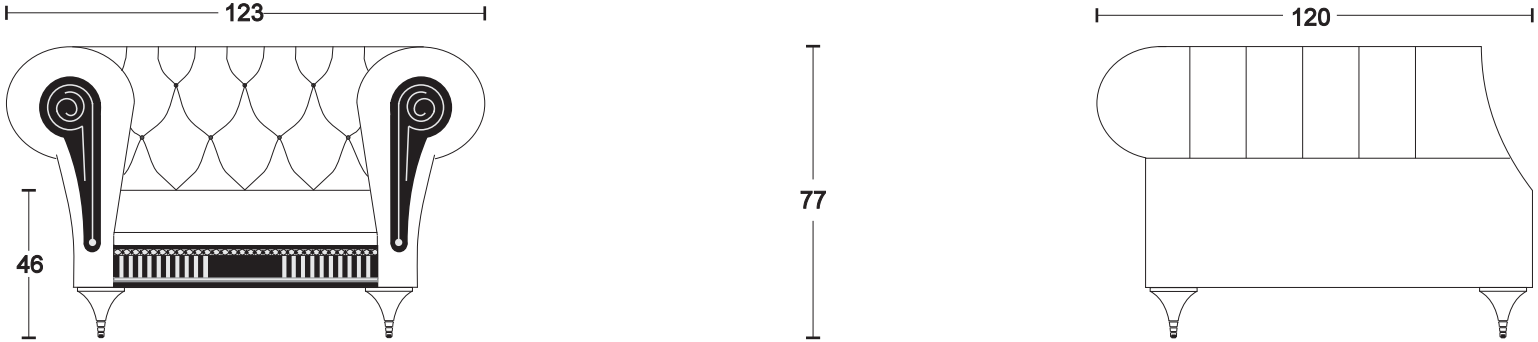

Pelle-Leather cat."SOFT"	Pelle-Leather cat."EXTRA"	Pelle-Leather cat."GLAM"
€ 9.487,50	€ 10.309,20	€ 11.247,50
Black & White Decor € 9.740,50	Black & White Decor € 10.562,20	Black & White Decor € 11.500,50
Eco Nabuk Eco Nubuk	Velluto Velvet	
€ 7.653,80	€ 8.571,20	
Black & White Decor € 7.906,80	Black & White Decor € 8.824,20	

CHEST NOUVEAU - ART DECO

CHAISE LOUNGE - DX

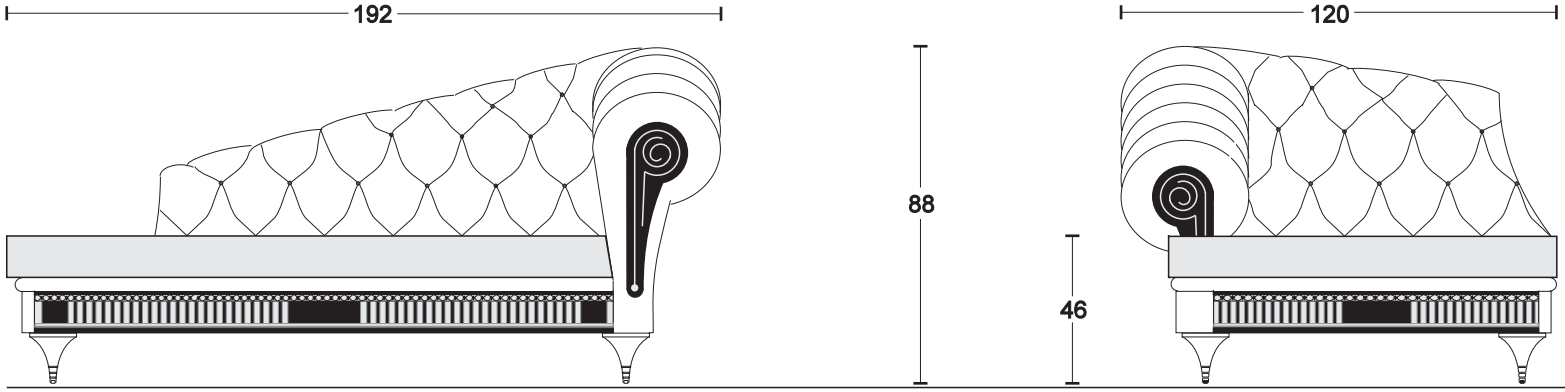

Pelle-Leather cat."SOFT"	Pelle-Leather cat."EXTRA"	Pelle-Leather cat."GLAM"
€ 11.239,80	€ 12.210,00	€ 13.409,00
Black & White Decor € 11.745,80	Black & White Decor € 12.713,80	Black & White Decor € 13.915,00
Eco Nabuk Eco Nubuk	Velluto Velvet	
€ 8.937,50	€ 10.039,70	
Black & White Decor € 9.443,50	Black & White Decor € 10.545,70	

CHEST NOUVEAU - ART DECO

CHAISE LOUNGE - SX

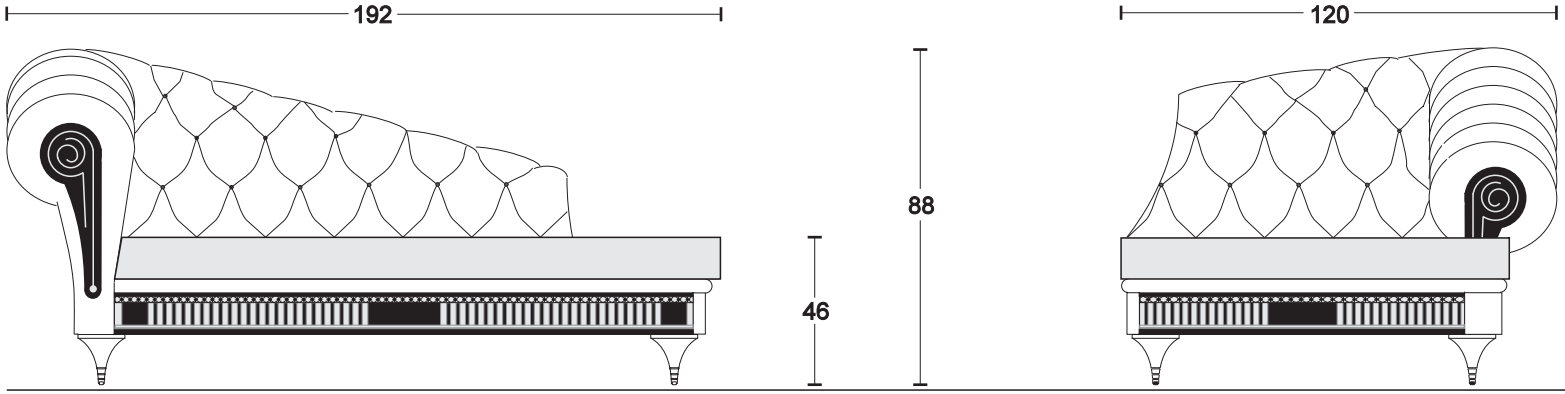

Pelle-Leather cat."SOFT"	Pelle-Leather cat."EXTRA"	Pelle-Leather cat."GLAM"
€ 11.239,80	€ 12.210,00	€ 13.409,00
Black & White Decor € 11.745,80	Black & White Decor € 12.713,80	Black & White Decor € 13.915,00
Eco Nabuk Eco Nubuk	Velluto Velvet	
€ 8.937,50	€ 10.039,70	
Black & White Decor € 9.443,50	Black & White Decor € 10.545,70	

CHEST NOUVEAU

Pelle Leather cat.SOFT	Pelle Leather cat.EXTRA	Pelle Leather cat.GLAM	Eco Nabuk Eco Nubuk	Velluto Velvet
€ 495,00	€ 583,00	€ 676,50	€ 284,90	€ 367,40

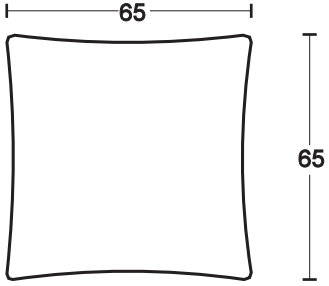

EXTRA CUSCINO - EXTRA CUSCION 65-55-45

Pelle Leather cat.SOFT	Pelle Leather cat.EXTRA	Pelle Leather cat.GLAM	Eco Nabuk Eco Nubuk	Velluto Velvet
€ 456,50	€ 533,50	€ 632,50	€ 266,20	€ 335,50

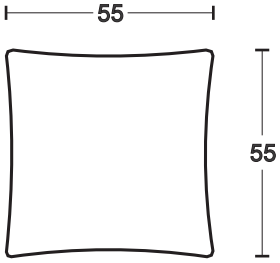

Pelle Leather cat.SOFT	Pelle Leather cat.EXTRA	Pelle Leather cat.GLAM	Eco Nabuk Eco Nubuk	Velluto Velvet
€ 412,50	€ 484,00	€ 561,00	€ 242,00	€ 303,60

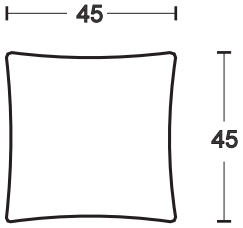

CONFORT-NOUVEAU-264 ART DECO DIVANO - SOFA

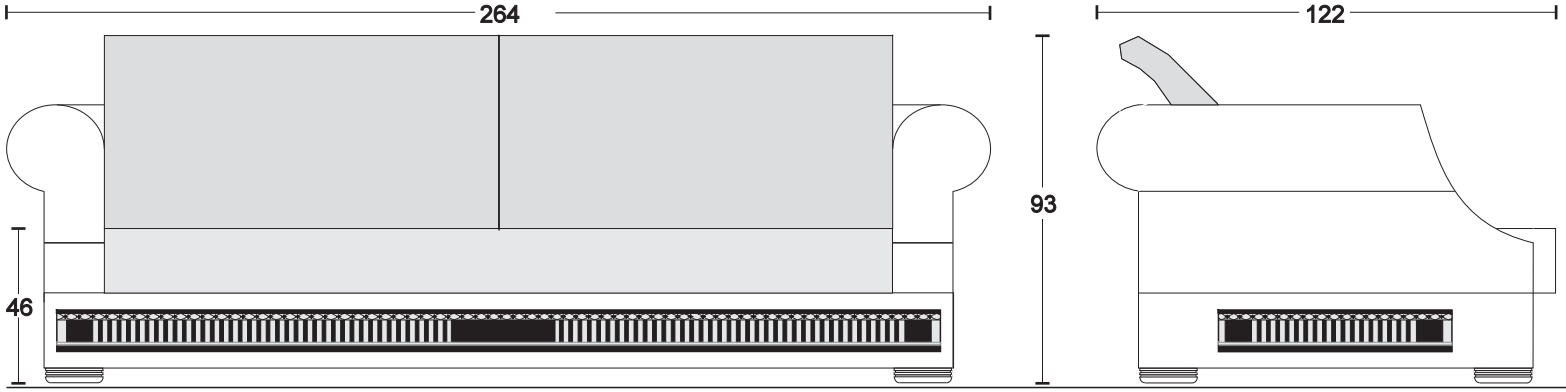

Pelle-Leather cat."SOFT"	Pelle-Leather cat."EXTRA"	Pelle-Leather cat."GLAM"
€ 11.309,10	€ 12.586,20	€ 13.877,60
Black & White Decor € 12.068,10	Black & White Decor € 13.346,30	Black & White Decor € 13.305,00
Eco Nabuk Eco Nubuk	Velluto Velvet	
€ 8.741,70	€ 10.202,50	
Black & White Decor € 9.500,70	Black & White Decor € 10.961,50	

CONFORT-NOUVEAU-193 ART DECO DIVANO - SOFA

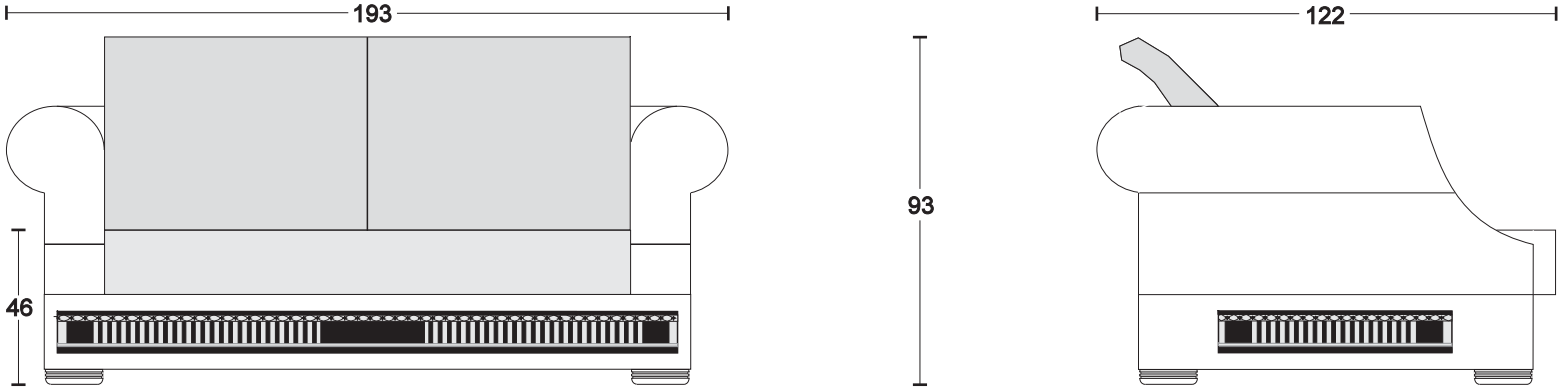

Pelle-Leather cat."SOFT"	Pelle-Leather cat."EXTRA"	Pelle-Leather cat."GLAM"
€ 9.487,50	€ 10.563,30	€ 11.764,50
Black & White Decor € 10.120,00	Black & White Decor € 11.195,80	Black & White Decor € 12.397,00
Eco Nabuk Eco Nubuk	Velluto Velvet	
€ 7.400,80	€ 8.675,70	
Black & White Decor € 8.033,30	Black & White Decor € 9.308,20	

CONFORT-NOUVEAU-125 ART DECO POLTRONA - ARMCHAIR

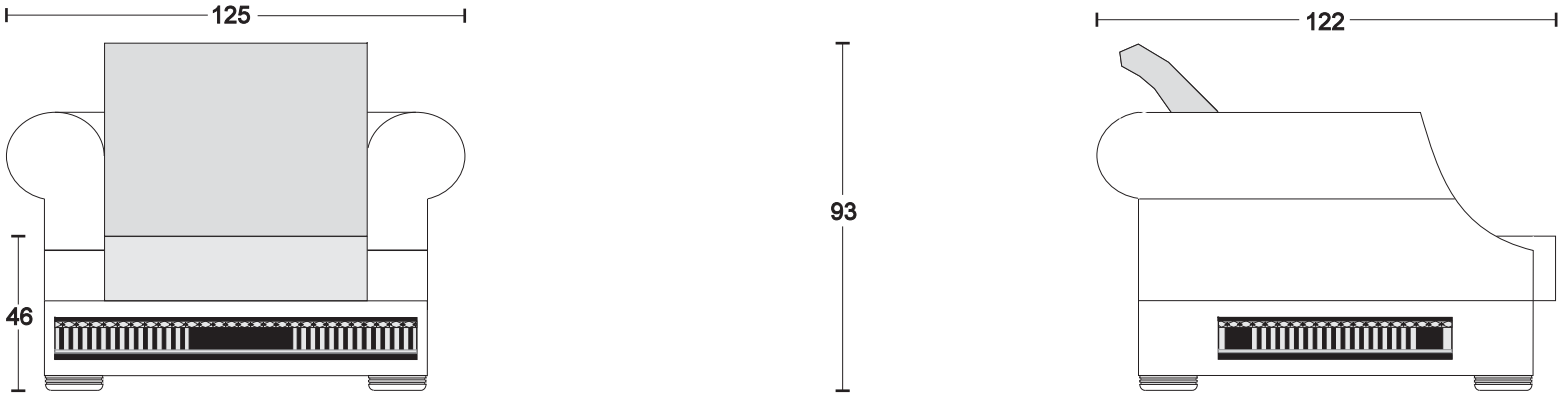

Pelle-Leather cat."SOFT"	Pelle-Leather cat."EXTRA"	Pelle-Leather cat."GLAM"
€ 7.261,10	€ 8.008,00	€ 8.943,00
Black & White Decor € 7.767,10	Black & White Decor € 8.514,00	Black & White Decor € 9.449,00
Eco Nabuk Eco Nubuk	Velluto Velvet	
€ 5.717,80	€ 6.635,20	
Black & White Decor € 6.223,80	Black & White Decor € 7.141,20	

CONFORT-NOUVEAU-264 LUMBAR CUSHION ART DECO — DIVANO - SOFA

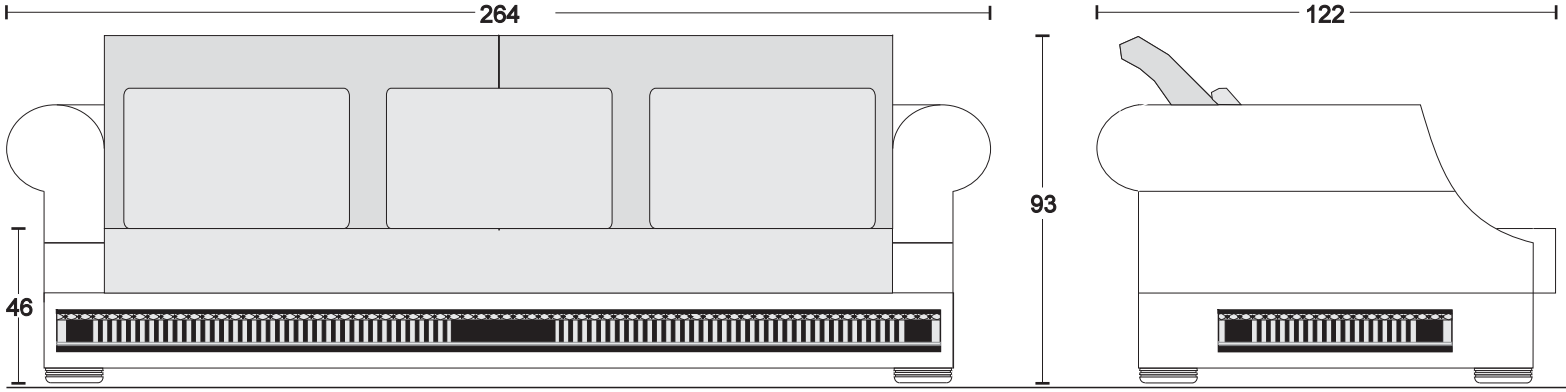

Pelle-Leather cat."SOFT"	Pelle-Leather cat."EXTRA"	Pelle-Leather cat."GLAM"
€ 12.447,60	€ 13.915,00	€ 15.394,50
Black & White Decor € 13.205,50	Black & White Decor € 14.674,00	Black & White Decor € 16.153,50
Eco Nabuk Eco Nubuk	Velluto Velvet	
€ 9.500,70	€ 11.138,60	
Black & White Decor € 10.259,70	Black & White Decor € 11.897,60	

CONFORT-NOUVEAU-193 LUMBAR CUSHION ART DECO — DIVANO - SOFA

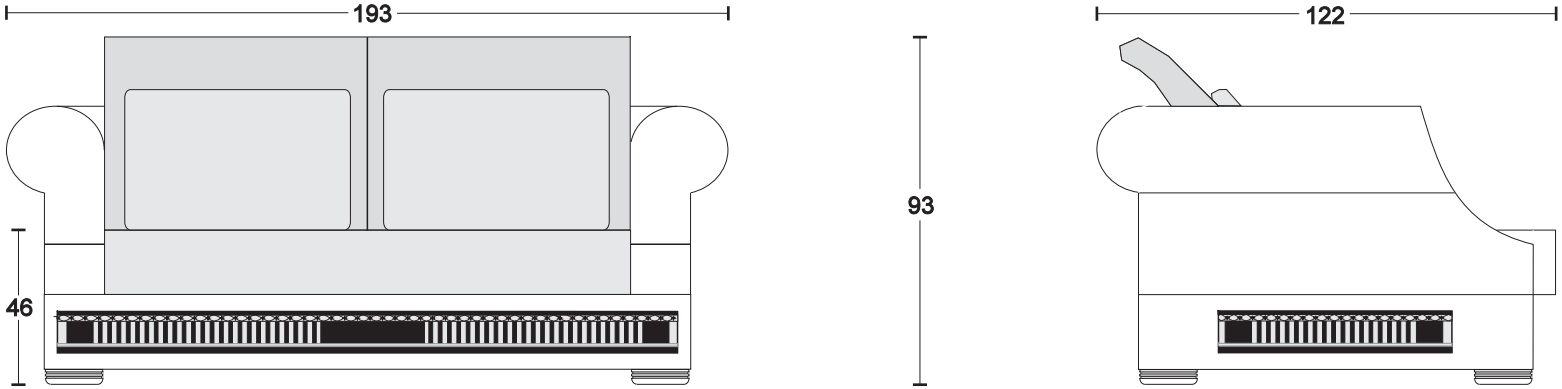

Pelle-Leather cat."SOFT"	Pelle-Leather cat."EXTRA"	Pelle-Leather cat."GLAM"
€ 10.246,50	€ 11.448,80	€ 12.776,50
Black & White Decor € 10.879,00	Black & White Decor € 11.827,20	Black & White Decor € 13.409,00
Eco Nabuk Eco Nubuk	Velluto Velvet	
€ 9.500,70	€ 9.296,10	
Black & White Decor € 8.539,30	Black & White Decor € 9.928,60	

CONFORT-NOUVEAU-125 LUMBAR CUSHION ART DECO — POLTRONA - ARMCHAIR

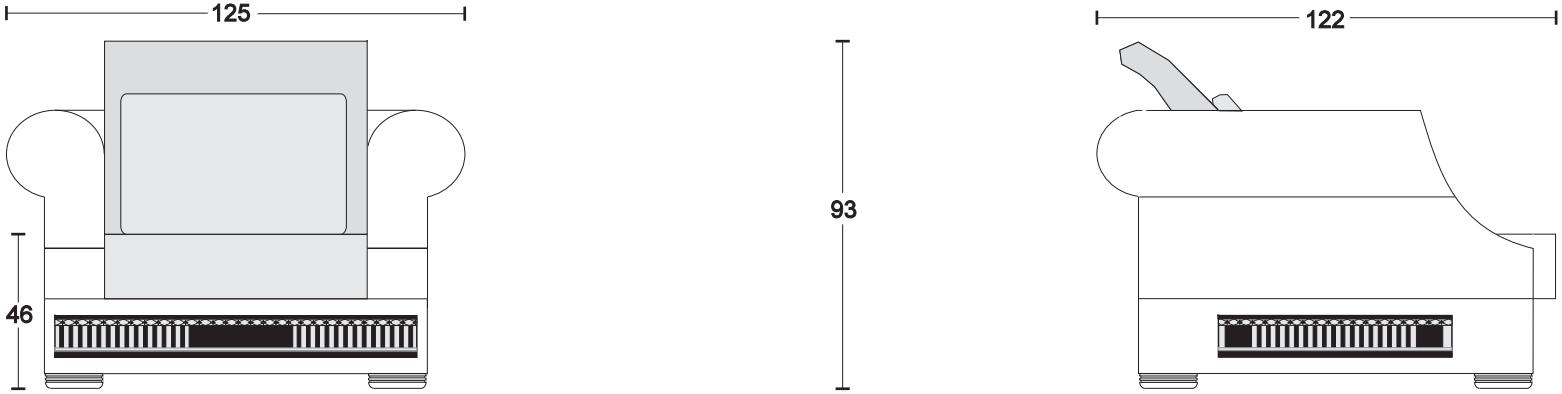

Pelle-Leather cat."SOFT"	Pelle-Leather cat."EXTRA"	Pelle-Leather cat."GLAM"
€ 7.640,60	€ 8.450,20	€ 9.449,00
Black & White Decor € 8.146,60	Black & White Decor € 8.956,20	Black & White Decor € 9.955,00
Eco Nabuk Eco Nubuk	Velluto Velvet	
€ 5.970,80	€ 6.945,40	
Black & White Decor € 6.476,80	Black & White Decor € 7.451,40	

CONFORT NOUVEAU- ART DECO — CHAISE LOUNGE - DX

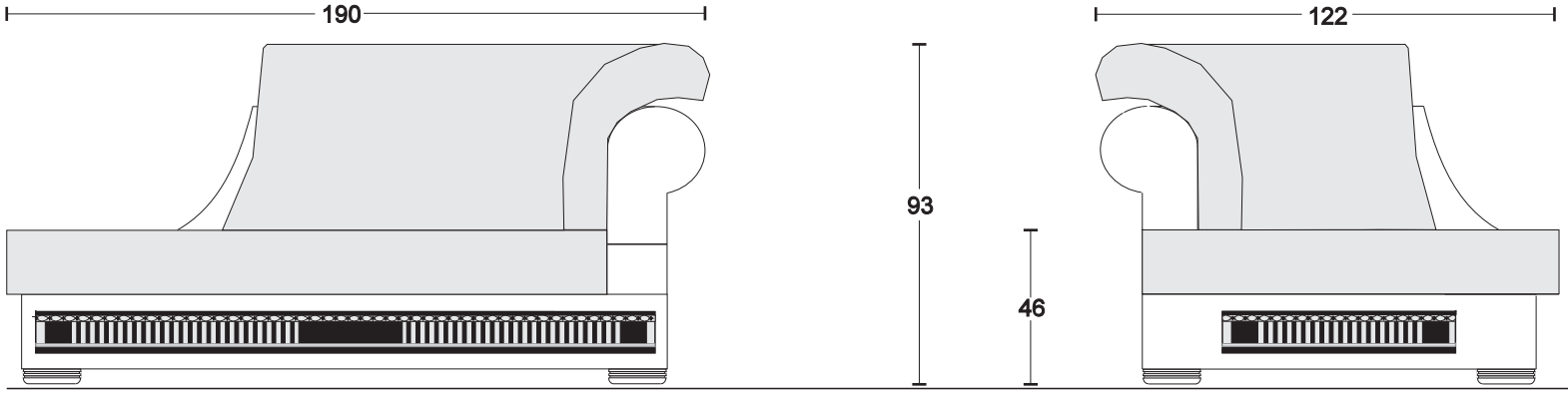

Pelle-Leather cat."SOFT"	Pelle-Leather cat."EXTRA"	Pelle-Leather cat."GLAM"
€ 9.476,50	€ 10.439,00	€ 11.412,50
Black & White Decor € 10.362,00	Black & White Decor € 11.324,50	Black & White Decor € 12.298,00
Eco Nabuk Eco Nubuk	Velluto Velvet	
€ 7.691,20	€ 8.794,50	
Black & White Decor € 8.576,70	Black & White Decor € 9.680,00	

CONFORT NOUVEAU- ART DECO — CHAISE LOUNGE - SX

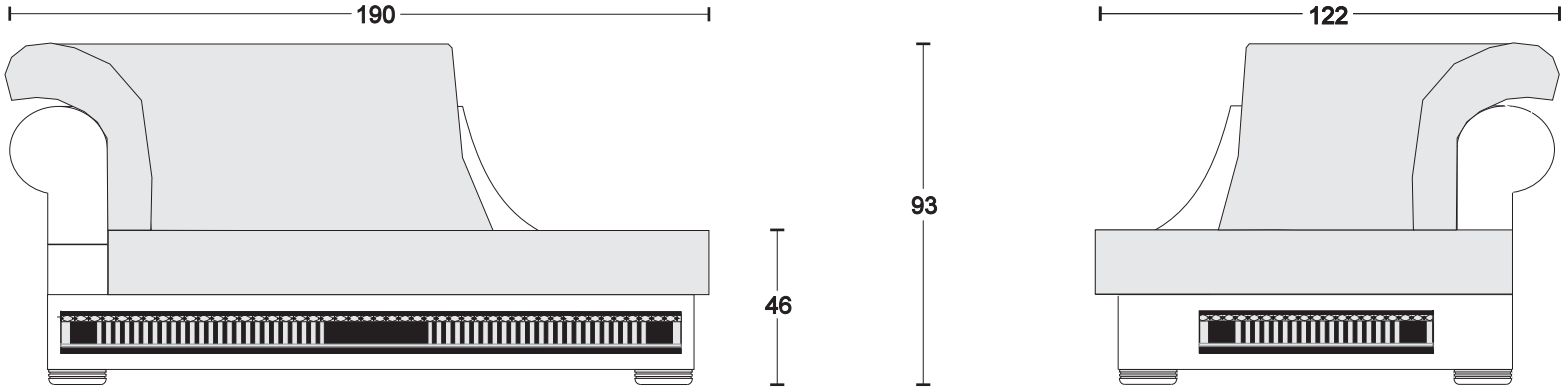

Pelle-Leather cat."SOFT"	Pelle-Leather cat."EXTRA"	Pelle-Leather cat."GLAM"
€ 9.476,50	€ 10.439,00	€ 11.412,50
Black & White Decor € 10.362,00	Black & White Decor € 11.324,50	Black & White Decor € 12.298,00
Eco Nabuk Eco Nubuk	Velluto Velvet	
€ 7.691,20	€ 8.794,50	
Black & White Decor € 8.576,70	Black & White Decor € 9.680,00	

CONFORT NOUVEAU — EXTRA CUSCINO - EXTRA CUSCION 65-55-45

Pelle Leather cat.SOFT	Pelle Leather cat.EXTRA	Pelle Leather cat.GLAM	Eco Nabuk Eco Nubuk	Velluto Velvet
€ 495,00	€ 583,00	€ 676,50	€ 284,90	€ 367,40

Pelle Leather cat.SOFT	Pelle Leather cat.EXTRA	Pelle Leather cat.GLAM	Eco Nabuk Eco Nubuk	Velluto Velvet
€ 456,50	€ 533,50	€ 632,50	€ 266,20	€ 335,50

Pelle Leather cat.SOFT	Pelle Leather cat.EXTRA	Pelle Leather cat.GLAM	Eco Nabuk Eco Nubuk	Velluto Velvet
€ 412,50	€ 484,00	€ 561,00	€ 242,00	€ 303,60

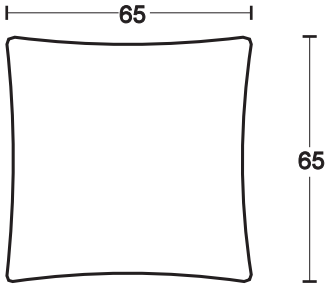

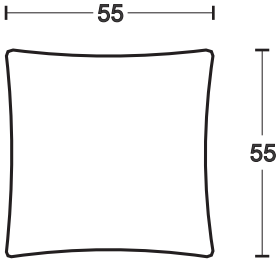

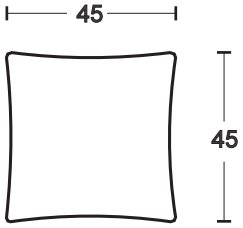

PLAY ROOM - POOL TABLE 10-12 FEET - ART DECO

10 piedi dimensioni campo gioco cm. 284 x 142 - Dimensioni esterne cm. 320 x 178 - Russo H. 80; Snooker inglese H. 80; Americano H. 78
10 Feet playng fiel dimention cm. 284 x 142 - External dimention cm. 320 x 178 - Russian H. 80; English Snooker H. 80; American H. 78
Con piano in ardesia 40 mm - With playground stone slate 40 mm

12 piedi dimensioni campo gioco cm. 355 x 177 - Dimensioni esterne cm. 391 x 213 - Russo H. 80; Snooker inglese H. 80; Americano H. 78
12 Feet playng fiel dimention cm. 355 x 177 - External dimention cm. 391 x 213 - Russian H. 80; English Snooker H. 80; American H. 78
Con piano in ardesia 40 mm - With playground stone slate 40 mm

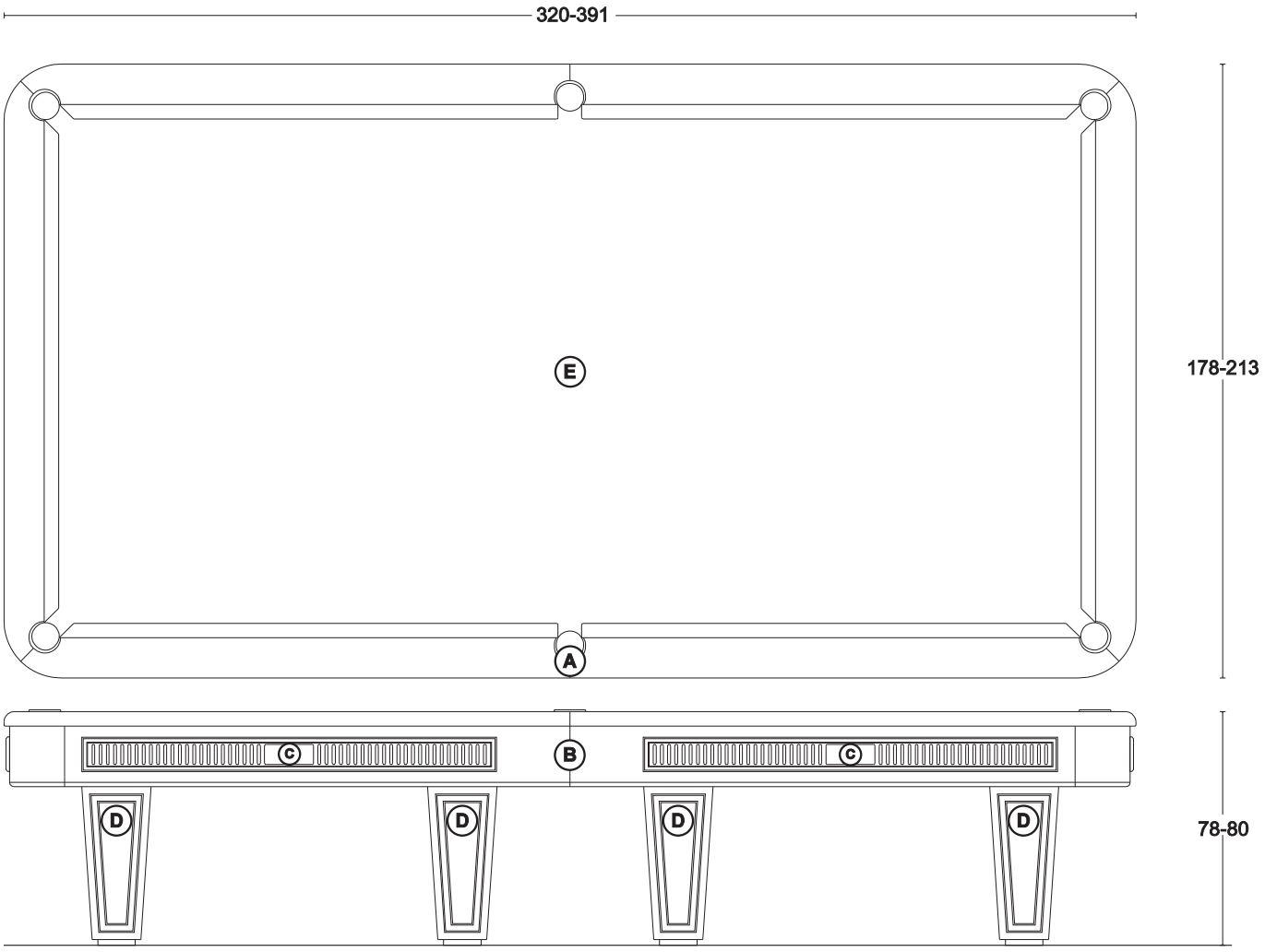

A+B+D Tutti i Laccato opaco / All Opaque laquered — D Decorazioni: Oro/Argento foglia / D Decoration: Gold/Silver foil

C Inserti: Tutte le combinazioni di oro/argento foglia con tutti i laccati
Insert: Gold/Silver foil combined with all laquered

E Tappeto biliardo colori diversi - Pool table cloth different colours

10 PIEDI-10 FEET € 61.732,00
12 PIEDI-12 FEET € 73.623,00

A+B+D Tutti i Laccato lucido / All Glossy laquered — D Decorazioni: Oro/Argento foglia / D Decoration: Gold/Silver foil

C Inserti: Tutte le combinazioni con oro/argento foglia con laccati
Insert: Gold/Silver foil combined with all laquered

E Tappeto Biliardo color: Tappeto biliardo colori diversi - Pool table cloth different colours

10 PIEDI-10 FEET € 64.135,50
12 PIEDI-12 FEET € 64.135,50

PLAY ROOM - POOL LAMP 10-12 FEET - ART DECO

Lampada a LED per biliardo da 10-12 piedi - 170 Watt - peso kg. 85
LED Lamp for Pool 10-12 Feet - 170 Watt - Weight Kg. 85

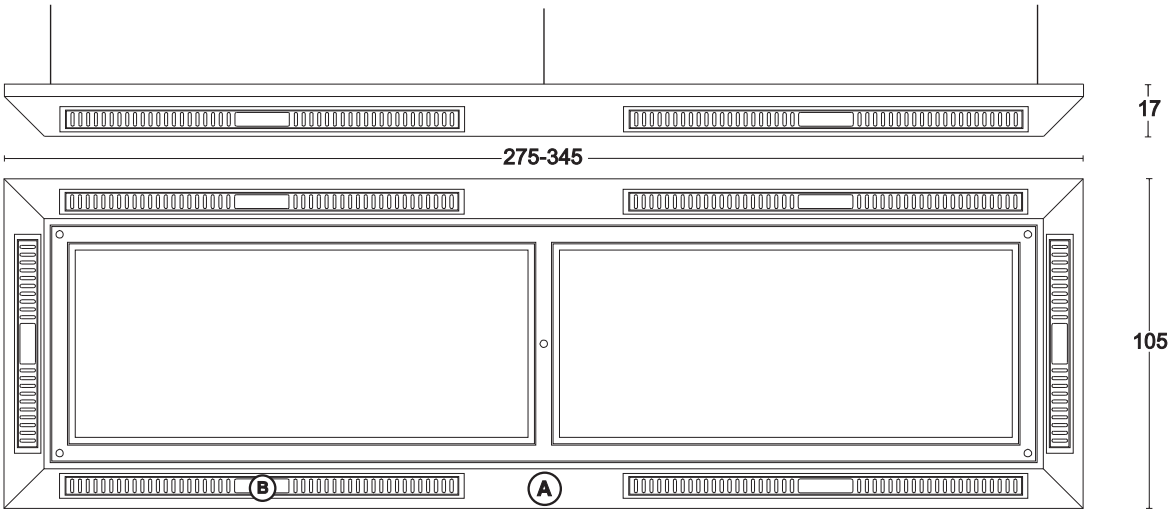

(A) Tutti i Laccato opaco - All Opaque laquered **€ 11.764,50**

(B) Inserti: Tutte le combinazioni di oro/argento foglia con tutti i laccati
Insert: Gold/Silver foil combined with all laquered

(A) Tutti i Laccato lucido - All Glossy laquered **€ 12.776,50**

(B) Inserti: Tutte le combinazioni con oro/argento foglia con laccati
Insert: Gold/Silver foil combined with all laquered

CUE RACK-BODY-R - ART DECO

Porta stecche per biliardo da 10-12 piedi con orologio al quarzo
Pool Cue Rack for 10-12 Feet with quarz clock

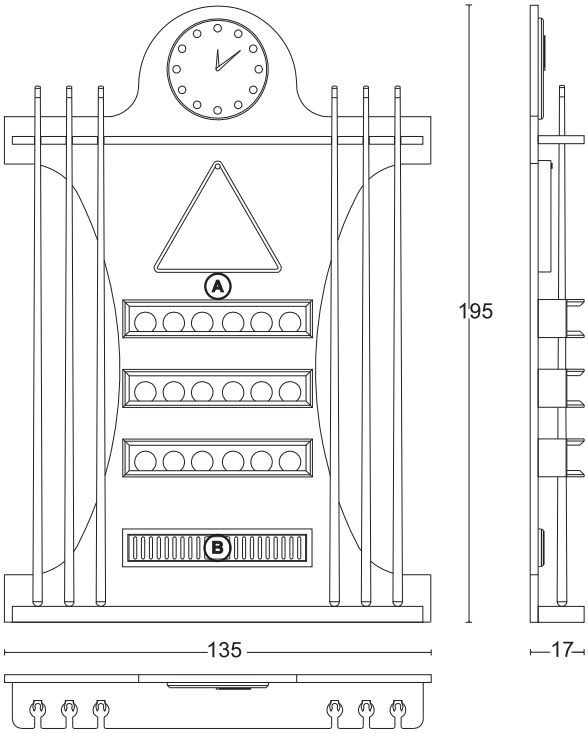

(A) Tutti i Laccato opaco - All Opaque laquered **€ 5.250,30**

(B) Inserti: Tutte le combinazioni di oro/argento foglia con tutti i laccati
Insert: Gold/Silver foil combined with all laquered

(A) Tutti i Laccato lucido - All Glossy laquered **€ 6.009,30**

(B) Inserti: Tutte le combinazioni di oro/argento foglia con tutti i laccati
Insert: Gold/Silver foil combined with all laquered

- stecche in legno L.-Standard - da cm.160 (set 6 pezzi) - wooden Pool cue L.-Standard - cm. 160 (set 6 pieces) **€ 2.428,80**
- Set biglie Ø 52,4 mm. Snooker inglese - Ø 57mm. per Pool americano - Ø 68 mm per Piramide russa **€ 607,20**
  Set balls Ø 52,4 mm. english Snooker - Ø 57mm. American Pool - Ø 68 mm Russian Piramid

PLAY ROOM - POOL TABLE 8-9 FEET - ART DECO

8 piedi dimensioni campo gioco cm. 224 x 112 - Dimensioni esterne cm. 260 x 148 - Russo H. 80; Snooker inglese H. 80; Americano H. 78
8 Feet playng fiel dimention cm. 224 x 112 - External dimention cm. 260 x 148 - Russian H. 80; English Snooker H. 80; American H. 78
Con piano in ardesia 25 mm - With playground stone slate 25 mm

9 piedi dimensioni campo gioco cm. 254 x 112 - Dimensioni esterne cm. 290 x 163 - Russo H. 80; Snooker inglese H. 80; Americano H. 78
9 Feet playng fiel dimention cm. 254 x 127 - External dimention cm. 290 x 163 - Russian H. 80; English Snooker H. 80; American H. 78
Con piano in ardesia 25 mm - With playground stone slate 25 mm

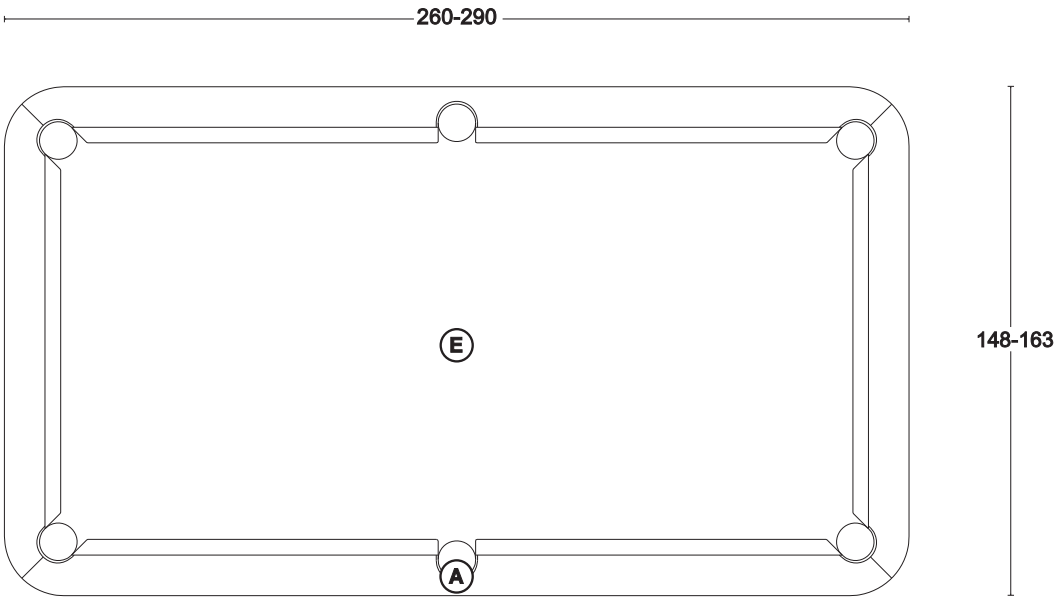

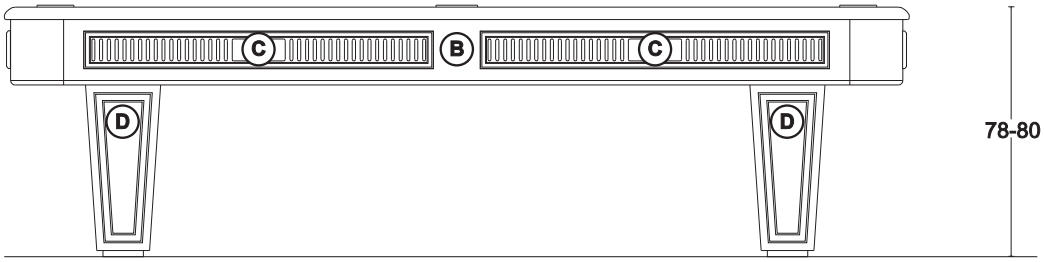

Ⓐ+Ⓑ+Ⓓ Tutti i Laccato opaco / All Opaque laquered — ⒹDecorazioni: Oro/Argento foglia / ⒹDecoration: Gold/Silver foil

Ⓒ Inserti: Tutte le combinazioni di oro/argento foglia con tutti i laccati
Insert: Gold/Silver foil combined with all laquered

Ⓔ Tappeto biliardo colori diversi - Pool table cloth different colours

8 PIEDI-8 FEET € 42.630,50
9 PIEDI-9 FEET € 42.630,50

Ⓐ+Ⓑ+Ⓓ Tutti i Laccato lucido / All Glossy laquered — ⒹDecorazioni: Oro/Argento foglia / ⒹDecoration: Gold/Silver foil

Ⓒ Inserti: Tutte le combinazioni con oro/argento foglia con laccati
Insert: Gold/Silver foil combined with all laquered

Ⓔ Tappeto biliardo colori diversi - Pool table cloth different colours

8 PIEDI-8 FEET € 43.642,50
9 PIEDI-9 FEET € 43.642,50

PLAY ROOM - POOL LAMP 8-9 FEET - ART DECO

Lampada a LED per biliardo da 8-9 piedi - 130 Watt - peso kg. 70
LED Lamp for Pool 8-9 Feet - 130 Watt - Weight Kg. 70

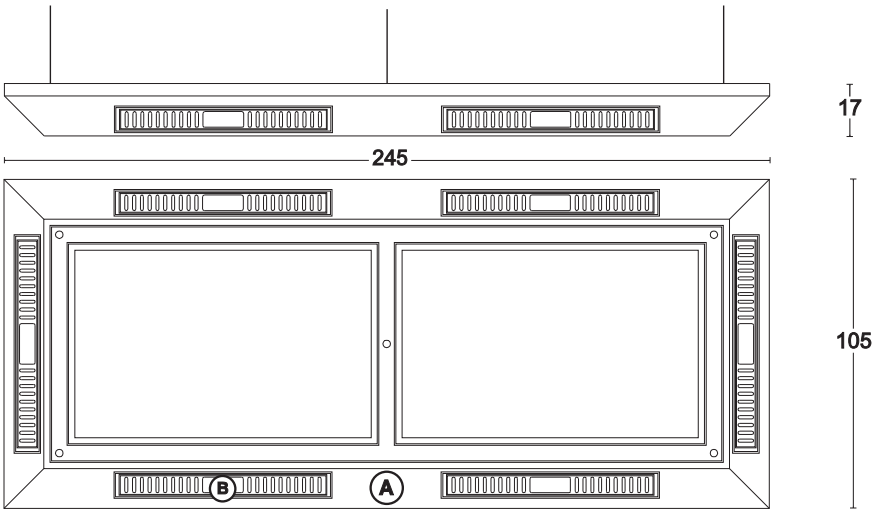

(A) Tutti i Laccato opaco - All Opaque laquered **€ 9.867,00**

(B) Inserti: Tutte le combinazioni di oro/argento foglia con tutti i laccati
Insert: Gold/Silver foil combined with all laquered

(A) Tutti i Laccato lucido - All Glossy laquered **€ 10.626,00**

(B) Inserti: Tutte le combinazioni con oro/argento foglia con laccati
Insert: Gold/Silver foil combined with all laquered

CUE RACK-BODY-A - ART DECO

Porta stecche per biliardo da 8-9 piedi con orologio al quarzo
Pool Cue Rack for 8-9 Feet with quarz clock

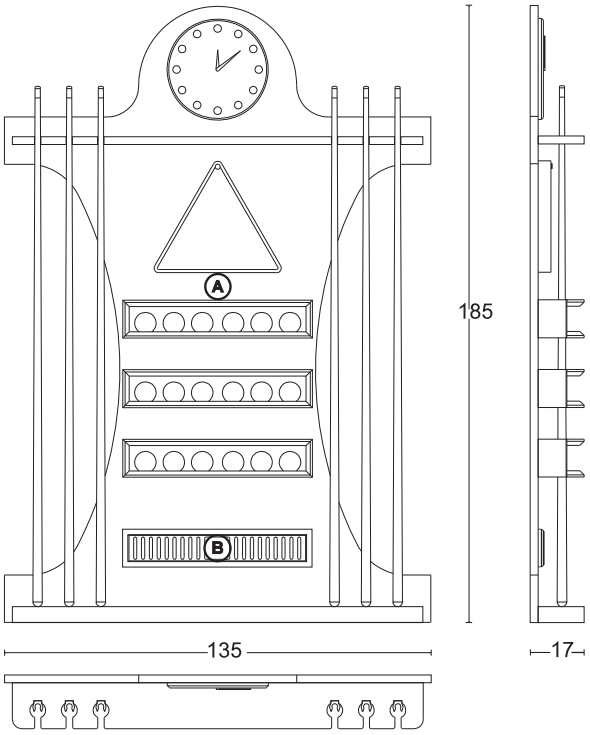

(A) Tutti i Laccato opaco - All Opaque laquered **€ 5.250,30**

(B) Inserti: Tutte le combinazioni di oro/argento foglia con tutti i laccati
Insert: Gold/Silver foil combined with all laquered

(A) Tutti i Laccato lucido - All Glossy laquered **€ 6.009,30**

(B) Inserti: Tutte le combinazioni di oro/argento foglia con tutti i laccati
Insert: Gold/Silver foil combined with all laquered

- stecche in legno L.-Standard - da cm.145 (set 6 pezzi) - wooden Pool cue L.-Standard - cm. 145 (set 6 pieces) **€ 1.821,60**
- Set biglie Ø 52,4 mm. Snooker inglese - Ø 57mm. per Pool americano - Ø 68 mm per Piramide russa **€ 607,20**
  Set balls Ø 52,4 mm. english Snooker - Ø 57mm. American Pool - Ø 68 mm Russian Piramid

CLASSIC 110 > 147

VISMARADESIGN®

TV - LIFT & FIRE - 158 - CLASSIC

Struttura per Home Cinema - a parete (con salita TV motorizzata computerizzata e telecomandata - completo di Bio-Camino ecologico)
Home Cinema - Wall Rack (motorized, computerized and remote-controlled TV lift system - provided with ecological bio-fireplace)

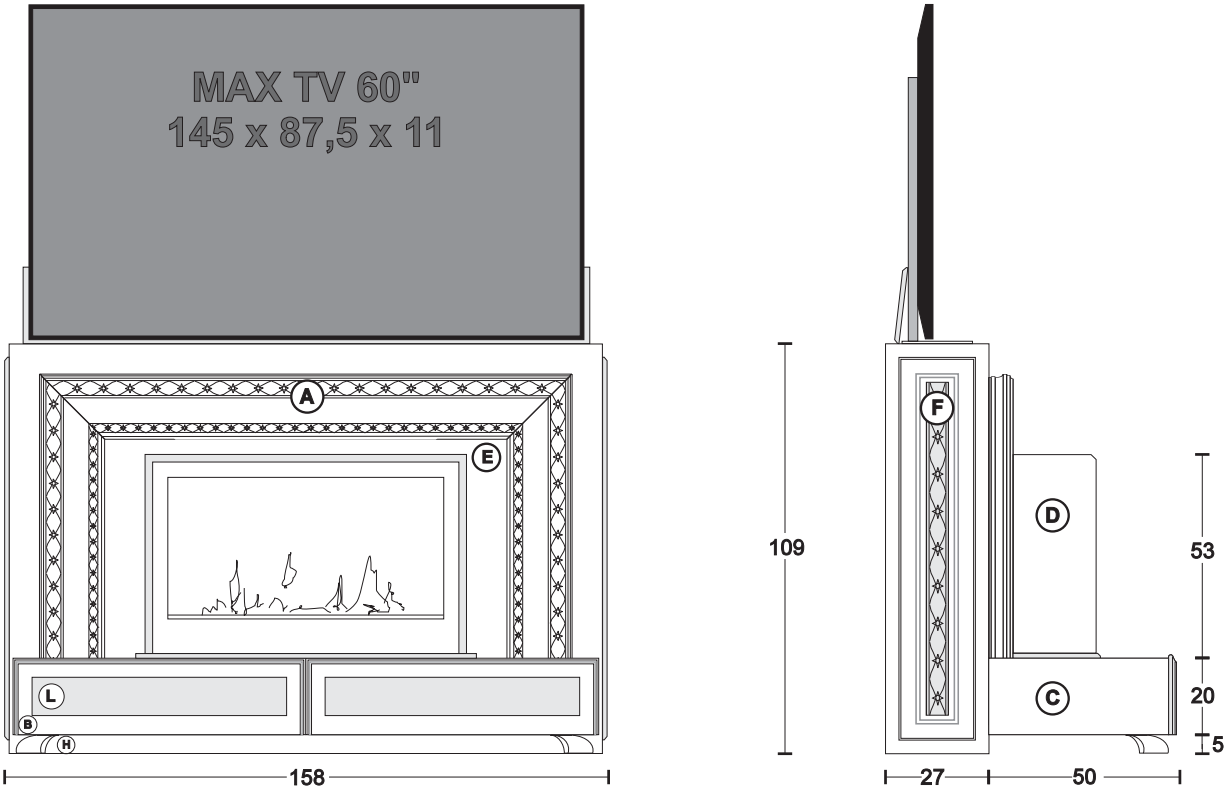

Finiture e combinazioni - Finishings and combinations

A	Oro/Argento foglia (Gold/Silver foil)	B+C+D+E+F	Tutti i laccati opachi - decorazioni argento/oro foglia (all opaque laquering - silver/gold foil decorations)	
H	Argento/Oro foglia (Silver/Gold foil)	L	Vetri:Bianco/Fume (glass white or fume)	€ 18.898,00
A+F+B	Nero/Bianco Lucido (gloss White and Black)	C+D+E	Bianco/Nero opaco - decorazioni argento/oro foglia (opaque white/Black - silver/gold foil decorations)	
H	Argento/Oro foglia (Silver/Gold foil)	L	Vetri:Bianco/Fume (glass white or fume)	€ 19.277,50
A+F+B	Nero/Bianco Lucido+Crystal stones (gloss White and Black+Crystal stones)	C+D+E	Bianco/Nero opaco - decorazioni argento/oro foglia (opaque white/Black - silver/gold foil decorations)	
H	Argento/Oro foglia (Silver/Gold foil)	L	Vetri:Bianco/Fume (glass white or fume)	€ 20.036,50
A+F	Bronzo-Oro/Argento+Crystal stones (Bronze-Gold/Silver Foil+Crystal stones)	B+C+D+E	Bronzo - decorazioni argento/oro foglia (Bronze - silver/gold foil decorations)	
H	Argento/Oro foglia (Silver/Gold foil)	L	Vetri:Bianco/Fume (glass white or fume)	€ 19.657,00
A	Argento foglia+patina bianca (Silver foil+white patina) Oro foglia+patina avorio (Gold foil+Ivory patina)	B+C+D+E+F	Bianco opaco - decorazioni argento foglia+patina bianca (opaque white - silver foil decorations+White Patina) Avorio opaco - decorazioni oro foglia+patina avorio (opaque Ivory - gold foil decorations+Ivory Patina)	
H	Argento/Oro foglia+patina bianca/Avorio (Silver/Gold foil+white/Ivory patina)	L	Vetri:Bianco/Fume (glass white or fume)	€ 19.088,30
A+F+B	Cracklè avorio+decorazioni argento/oro foglia (Ivory Crackle+silver/gold foil decoration)	C+D+E	Avorio opaco - decorazioni argento/oro foglia (opaque Ivory - silver/gold foil decorations)	
H	Argento/Oro foglia (Silver/Gold foil)	L	Vetri:Bianco/Fume (glass white or fume)	€ 19.266,50

TV - LIFT & BAR - 158 - CLASSIC

Struttura per Home Cinema - a parete (con salita TV motorizzata computerizzata e telecomandata - completo di Mobile a 3 ante push)
Home Cinema - Wall Rack (with motorized, computerized and remote-controlled TV lift system - provided with a 3 push-doors cabinet)

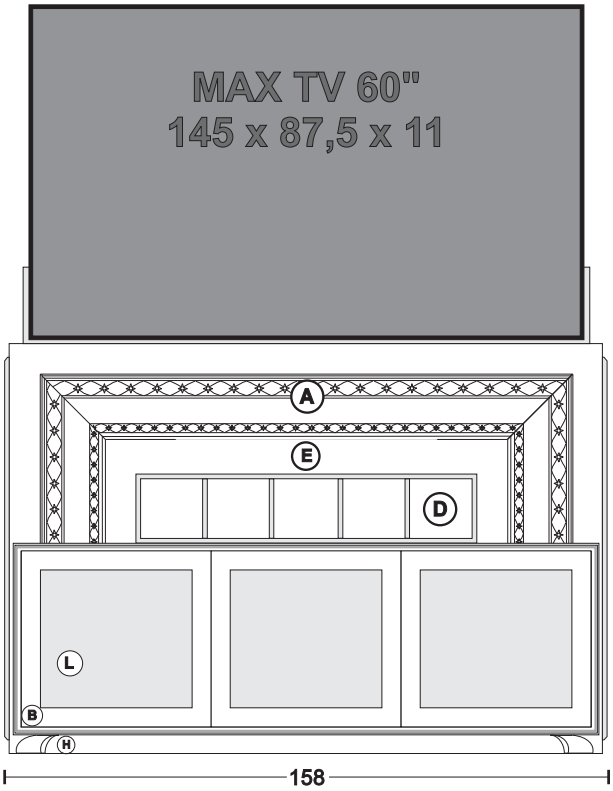

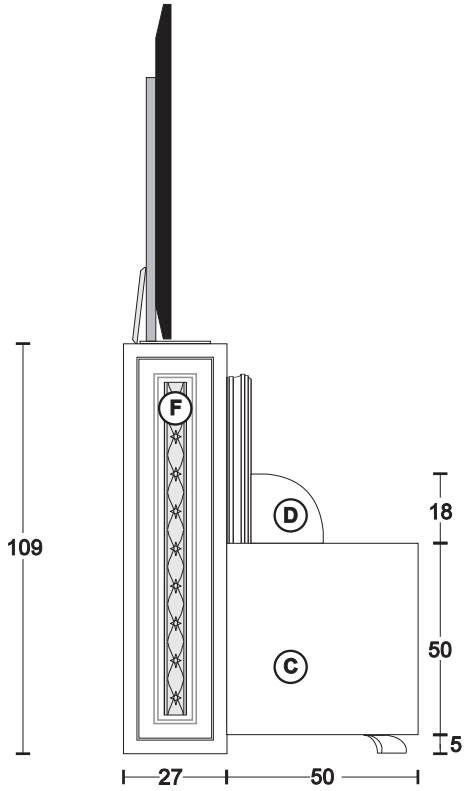

Finiture e combinazioni - Finishings and combinations

A	Oro/Argento foglia (Gold/Silver foil)	B+C+D+E+F	Tutti i laccati opachi - decorazioni argento/oro foglia (all opaque laquering - silver/gold foil decorations)	
H	Argento/Oro foglia (Silver/Gold foil)	L	Vetri:Bianco/Fume (glass white or fume)	€ 17.153,40
A+F+B	Nero/Bianco Lucido (gloss White and Black)	C+D+E	Bianco/Nero opaco - decorazioni argento/oro foglia (opaque white/Black - silver/gold foil decorations)	
H	Argento/Oro foglia (Silver/Gold foil)	L	Vetri:Bianco/Fume (glass white or fume)	€ 17.532,90
A+F+B	Nero/Bianco Lucido+Crystal stones (gloss White and Black+Crystal stones)	C+D+E	Bianco/Nero opaco - decorazioni argento/oro foglia (opaque white/Black - silver/gold foil decorations)	
H	Argento/Oro foglia (Silver/Gold foil)	L	Vetri:Bianco/Fume (glass white or fume)	€ 18.291,90
A+F	Bronzo-Oro/Argento+Crystal stones (Bronze-Gold/Silver Foil+Crystal stones)	B+C+D+E	Bronzo - decorazioni argento/oro foglia (Bronze - silver/gold foil decorations)	
H	Argento/Oro foglia (Silver/Gold foil)	L	Vetri:Bianco/Fume (glass white or fume)	€ 17.912,40
A	Argento foglia+patina bianca (Silver foil+white patina) Oro foglia+patina avorio (Gold foil+Ivory patina)	B+C+D+E+F	Bianco opaco - decorazioni argento foglia+patina bianca (opaque white - silver foil decorations+White Patina) Avorio opaco - decorazioni oro foglia+patina avorio (opaque Ivory - gold foil decorations+Ivory Patina)	
H	Argento/Oro foglia+patina bianca/avorio (Silver/Gold foil+white/Ivory patina)	L	Vetri:Bianco/Fume (glass white or fume)	€ 17.330,50
A+F+B	Crackle avorio+decorazioni argento/oro foglia (Ivory Crackle+silver/gold foil decoration)	C+D+E	Avorio opaco - decorazioni argento/oro foglia (opaque Ivory - silver/gold foil decorations)	
H	Argento/Oro foglia (Silver/Gold foil)	L	Vetri:Bianco/Fume (glass white or fume)	€ 17.532,90

TV - LIFT & FIRE - 182 - CLASSIC

Struttura per Home Cinema - a parete (con salita TV motorizzata computerizzata e telecomandata - completo di Bio-Camino ecologico)
Home Cinema - Wall Rack (motorized, computerized and remote-controlled TV lift system - provided with ecological bio-fireplace)

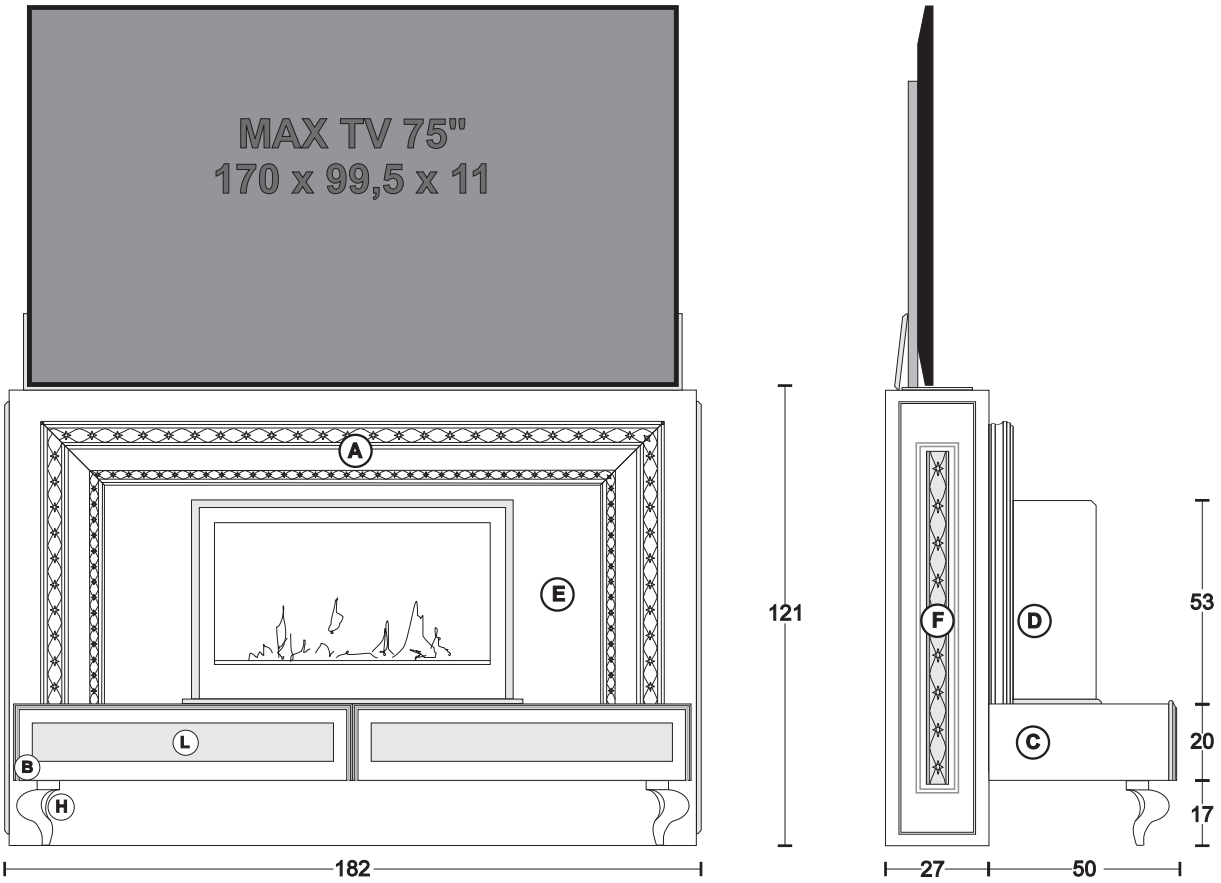

Finiture e combinazioni - Finishings and combinations

A	Oro/Argento foglia (Gold/Silver foil)	B+C+D+E+F	Tutti i laccati opachi - decorazioni argento/oro foglia (all opaque laquering - silver/gold foil decorations)	
H	Argento/Oro foglia (Silver/Gold foil)	L	Vetri:Bianco/Fume (glass white or fume)	€ 19.294,00
A+F+B	Nero/Bianco Lucido (gloss White and Black)	C+D+E	Bianco/Nero opaco - decorazioni argento/oro foglia (opaque white/Black - silver/gold foil decorations)	
H	Argento/Oro foglia (Silver/Gold foil)	L	Vetri:Bianco/Fume (glass white or fume)	€ 19.668,00
A+F+B	Nero/Bianco Lucido+Crystal stones (gloss White and Black+Crystal stones)	C+D+E	Bianco/Nero opaco - decorazioni argento/oro foglia (opaque white/Black - silver/gold foil decorations)	
H	Argento/Oro foglia (Silver/Gold foil)	L	Vetri:Bianco/Fume (glass white or fume)	€ 20.427,00
A+F	Bronzo-Oro/Argento+Crystal stones (Bronze-Gold/Silver Foil+Crystal stones)	B+C+D+E	Bronzo - decorazioni argento/oro foglia (Bronze - silver/gold foil decorations)	
H	Argento/Oro foglia (Silver/Gold foil)	L	Vetri:Bianco/Fume (glass white or fume)	€ 20.053,00
A	Argento foglia+patina bianca (Silver foil+white patina) Oro foglia+patina avorio (Gold foil+Ivory patina)	B+C+D+E+F	Bianco opaco - decorazioni argento foglia+patina bianca (opaque white - silver foil decorations+White Patina) Avorio opaco - decorazioni oro foglia+patina avorio (opaque Ivory - gold foil decorations+Ivory Patina)	
H	Argento/Oro foglia+patina bianca/avorio (Silver/Gold foil+white/Ivory patina)	L	Vetri:Bianco/Fume (glass white or fume)	€ 19.494,20
A+F+B	Cracklè avorio+decorazioni argento/oro foglia (Ivory Cracle+silver/gold foil decorations)	C+D+E	Avorio opaco - decorazioni argento/oro foglia (opaque Ivory - silver/gold foil decorations)	
H	Argento/Oro foglia (Silver/Gold foil)	L	Vetri:Bianco/Fume (glass white or fume)	€ 19.671,30

TV - LIFT & BAR - 182 - CLASSIC

Struttura per Home Cinema - a parete (con salita TV motorizzata computerizzata e telecomandata - completo di Mobile a 4 ante push)
Home Cinema - Wall Rack (with motorized, computerized and remote-controlled TV lift system - provided with a 4 push-doors cabinet)

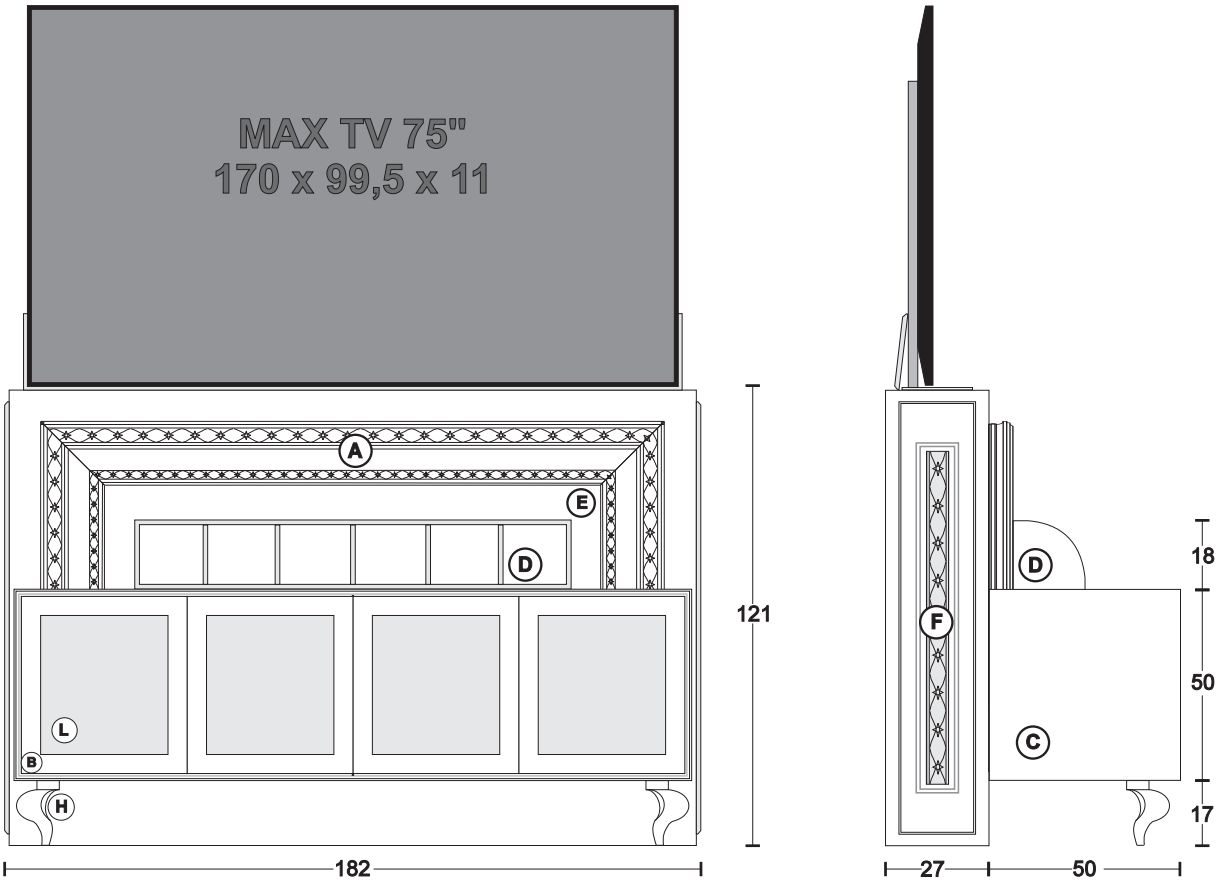

Finiture e combinazioni - Finishings and combinations

A	Oro/Argento foglia (Gold/Silver foil)	B+C+D+E+F	Tutti i laccati opachi - decorazioni argento/oro foglia (all opaque laquering - silver/gold foil decorations)	
H	Argento/Oro foglia (Silver/Gold foil)	L	Vetri:Bianco/Fume (glass white or fume)	€ 17.647,30
A+F+B	Nero/Bianco Lucido (gloss White and Black)	C+D+E	Bianco/Nero opaco - decorazioni argento/oro foglia (opaque white/Black - silver/gold foil decorations)	
H	Argento/Oro foglia (Silver/Gold foil)	L	Vetri:Bianco/Fume (glass white or fume)	€ 18.026,80
A+F+B	Nero/Bianco Lucido+Crystal stones (gloss White and Black+Crystal stones)	C+D+E	Bianco/Nero opaco - decorazioni argento/oro foglia (opaque white/Black - silver/gold foil decorations)	
H	Argento/Oro foglia (Silver/Gold foil)	L	Vetri:Bianco/Fume (glass white or fume)	€ 18.785,80
A+F	Bronzo-Oro/Argento+Crystal stones (Bronze-Gold/Silver Foil+Crystal stones)	B+C+D+E	Bronzo - decorazioni argento/oro foglia (Bronze - silver/gold foil decorations)	
H	Argento/Oro foglia (Silver/Gold foil)	L	Vetri:Bianco/Fume (glass white or fume)	€ 18.406,30
A	Argento foglia+patina bianca (Silver foil+white patina) Oro foglia+patina avorio (Gold foil+Ivory patina)	B+C+D+E+F	Bianco opaco - decorazioni argento foglia+patina bianca (opaque white - silver foil decorations+White Patina) Avorio opaco - decorazioni oro foglia+patina avorio (opaque Ivory - gold foil decorations+Ivory Patina)	
H	Argento/Oro foglia+patina bianca/Avorio (Silver/Gold foil+white/Ivory patina)	L	Vetri:Bianco/Fume (glass white or fume)	€ 17.836,50
A+F+B	Cracklè avorio+decorazioni argento/oro foglia (Ivory Cracklè+silver/gold foil decorations)	C+D+E	Avorio opaco - decorazioni argento/oro foglia (opaque Ivory - silver/gold foil decorations)	
H	Argento/Oro foglia (Silver/Gold foil)	L	Vetri:Bianco/Fume (glass white or fume)	€ 18.026,80

SLIDING HOME CINEMA - CLASSIC

Struttura per Home Cinema - a parete con apertura motorizzata, computerizzata e telecomandata - luci led laterali
Home Cinema - Wall Rack - Motorized and computerized opening, with remote control - LED lights on sides

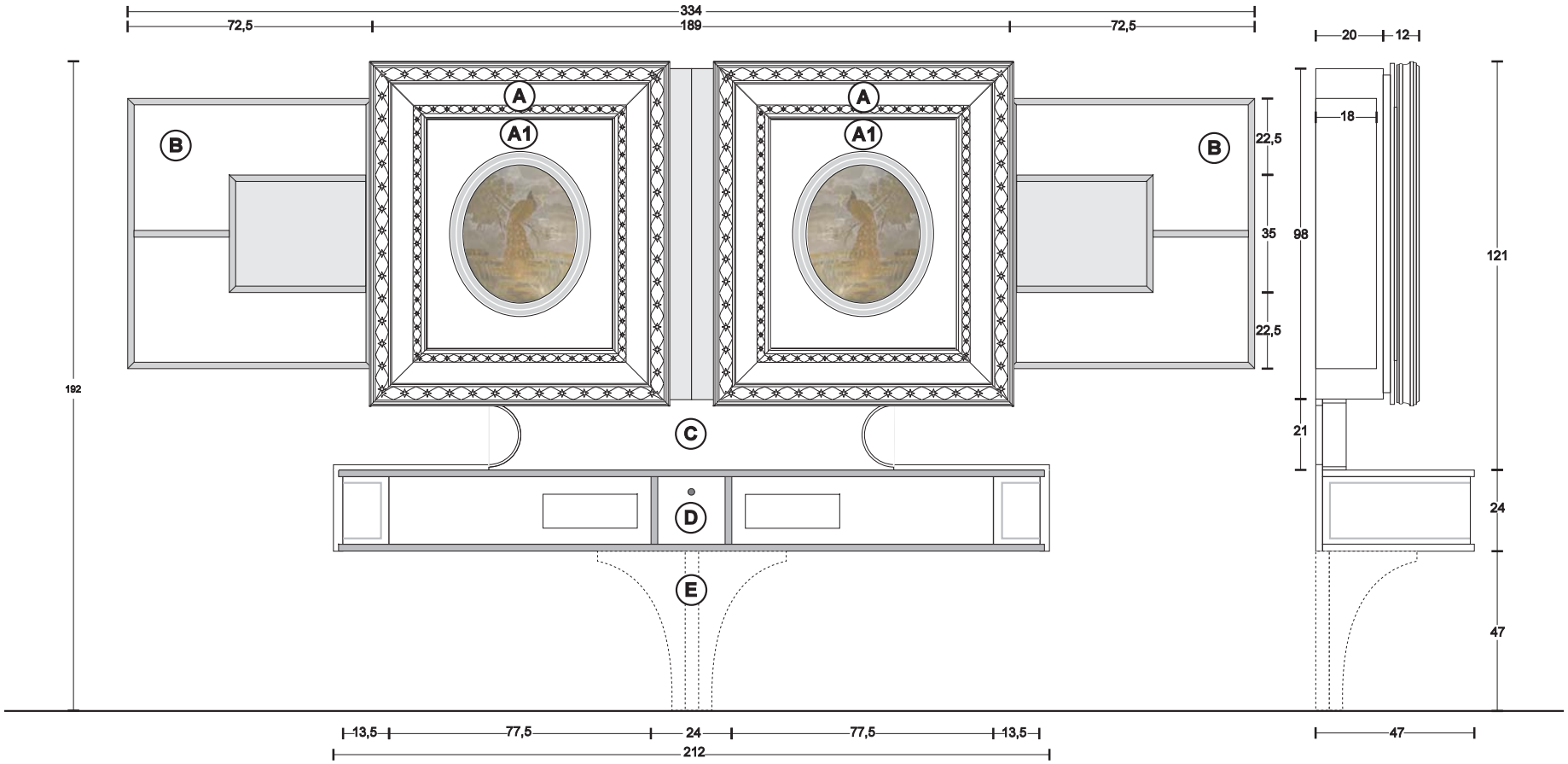

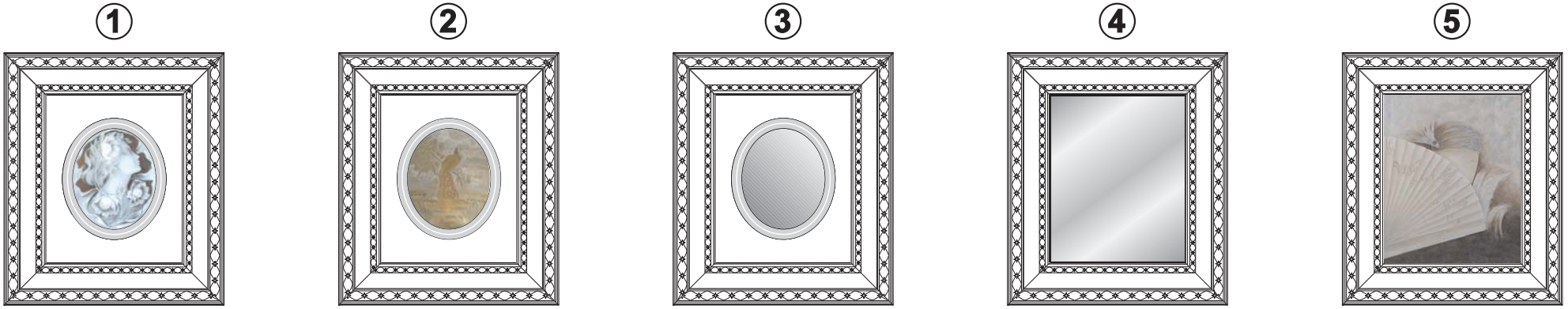

SLIDING HOME CINEMA - CLASSIC

Struttura per Home Cinema - a parete con apertura motorizzata, computerizzata e telecomandata - luci led laterali
Home Cinema - Wall Rack - Motorized and computerized opening, with remote control - LED lights on sides

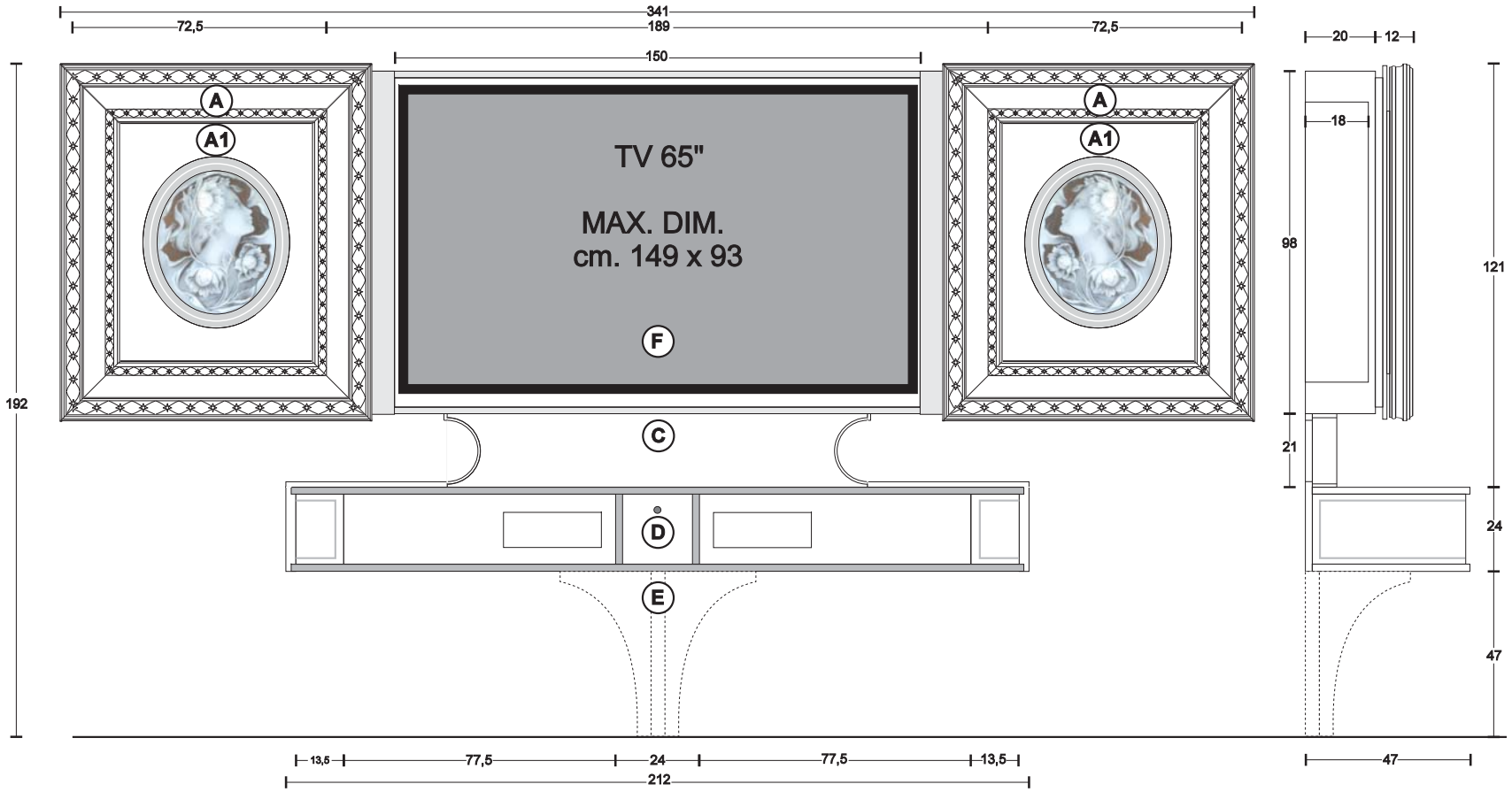

(A) Oro/Argento Foglia/bronzo/tutti laccati opachi
Gold/Silver foil+all opaque laquering

(A1)+(C)+(E)+(F) Tutti i laccati opachi
all opaque laquering

(B) Tutti i laccati opachi-Decorazioni Oro/Argento
all opaque laquering-decoration gold/silver foil

(D) Top Oro/Argento Foglia-parti rimanenti tutti i laccati opachi
Top gold/silver foil-remaining parts all opaque laquering

Con-with (1) EURO 22.377,30 | Con-with (2) EURO 25.971,00 | Con-with (3) EURO 21.935,10 | Con-with (4) EURO 21.960,00 | Con-with (5) EURO 22.605,00

(A) Bronzo-oro/argento+Crystal stones
Bronze-gold/silver foil+Crystal stones

(A1)+(C)+(E)+(F) Bronzo
Bronze

(B) Bronzo-decorazioni oro/argento
Bronze-gold/silver foil decorations

(D) Top Oro/Argento Foglia-parti rimanenti bronzo
Top gold/silver foil-remaining parts bronze laquering

Con-with (1) EURO 24.098,80 | Con-with (2) EURO 27.703,50 | Con-with (3) EURO 23.655,50 | Con-with (4) EURO 23.694,00 | Con-with (5) EURO 24.326,50

(A) Cracklè avorio+decorazioni argento/oro f
Ivory Cracklè+silver/gold foil decoration

(A1)+(C)+(E)+(F) Laccato avorio opaco
Ivory opaque laquering

(B) Laccato avorio opaco+decorazioni argento/oro foglia
Ivory opaque laquering+silver/gold foil decoration

(D) Cracklè avorio+decorazioni argento/oro foglia
Ivory cracklè+silver/gold foil decoration

Con-with (1) EURO 22.656,70 | Con-with (2) EURO 26.249,30 | Con-with (3) EURO 22.213,40 | Con-with (4) EURO 22.238,70 | Con-with (5) EURO 22.844,40

REVOLVING HOME CINEMA - CLASSIC

Struttura per Home Cinema - centro stanza con rotazione TV motorizzata, computerizzata e telecomandata
Home Cinema - Standing rack - Motorized and computerized revolving TV , with remote control

LATO -SIDE "A"

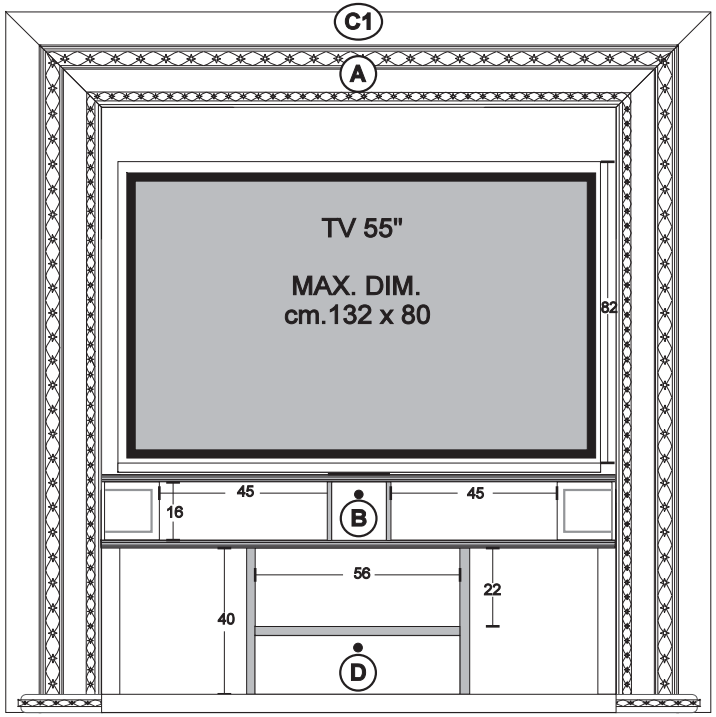

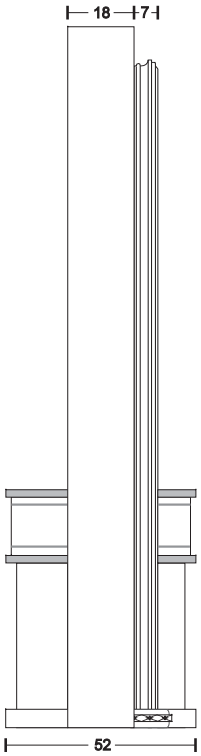

LATO -SIDE "B"

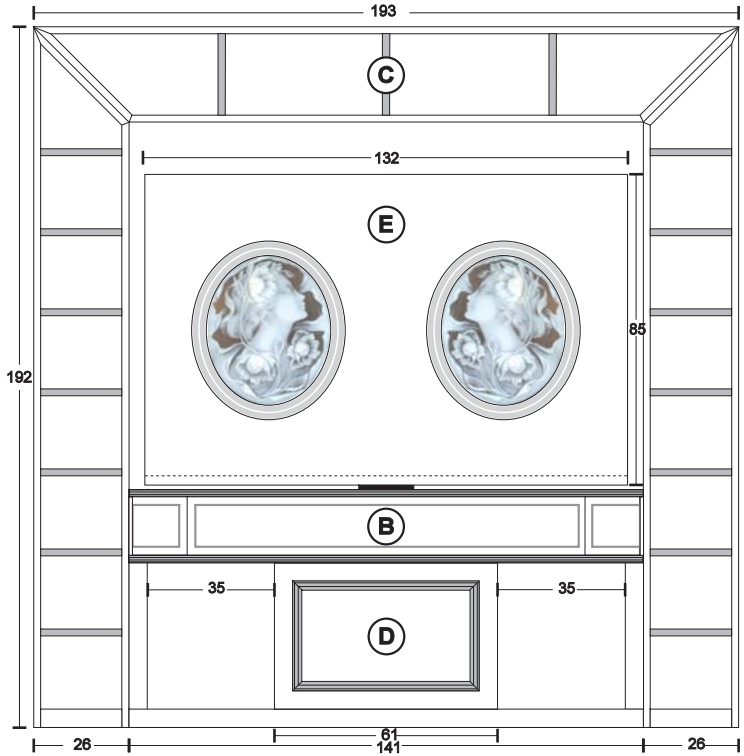

REVOLVING HOME CINEMA - CLASSIC

Struttura per Home Cinema - centro stanza con rotazione TV motorizzata, computerizzata e telecomandata
Home Cinema - Standing rack - Motorized and computerized revolving TV , with remote control

DECORAZIONE PANNELLO LATO "B" -DECORATION PANEL SIDE "B"

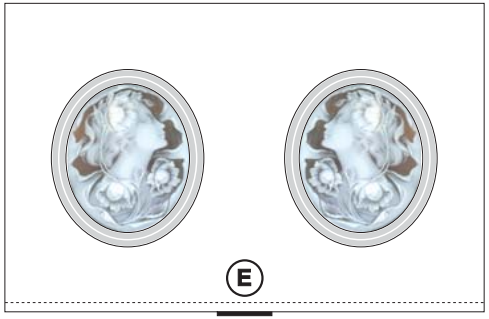

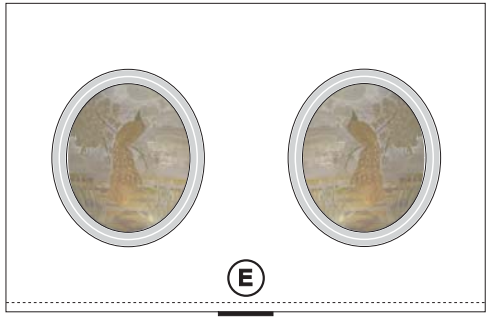

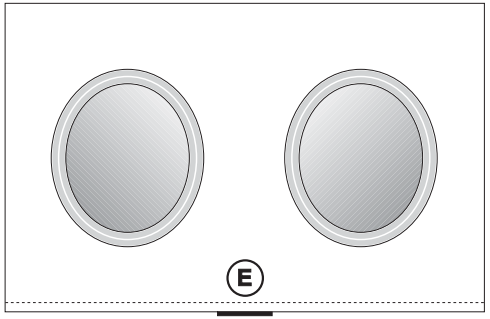

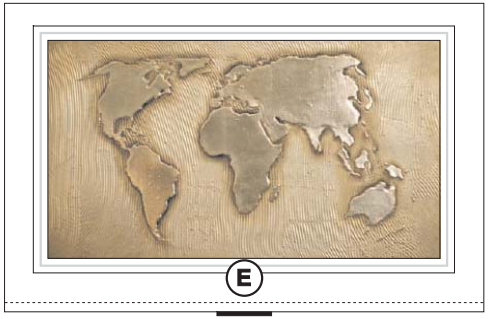

1 ovale con Cammeo
Oval with Cameo

2 Ovale con Pavone Artistico oro 23/22/20/18/16/12 Carati
Oval with Artistic peacock Gold 23/22/20/18/16/12 carats

3 Ovale con specchio bisellato
Oval with bevelled mirror

4 "Il Mondo" decorazione in rilievo in foglia platino
"The world" decoration in relief - platinum foil

A Oro/Argento Foglia+tutti i laccati Gold/Silver foil+all our laquering	**C1**+**C**+**E**+**D** Tutti i laccati opachi-Decorazioni Oro/Argento all opaque laquering-decoration gold/silver foil		**B** Oro/Argento Foglia/tutti i laccati opachi Gold/silver foil all opaque laquering
Con-with **1** EURO 15.195,40	Con-with **2** EURO 18.821,00	Con-with **3** EURO 14.777,40	Con-with **4** EURO 16.310,80
A Bronzo-oro/argento+crystal stones bronze-gold/silver foil+crystal stones	**C1**+**C**+**E**+**D** Bronzo-decorazioni oro/argento Bronze-gold/silver foil decorations		**B** Bronzo-decorazioni oro/argento Bronze-gold/silver foil decorations
Con-with **1** EURO 16.124,90	Con-with **2** EURO 19.747,20	Con-with **3** EURO 15.705,80	Con-with **4** EURO 17.240,30
A Bianco/nero lucido-oro/argento+crystal stones Gloss white/black-gold/silver foil+crystal stones	**C1**+**C**+**E**+**D** Bianco/nero opaco-decorazioni oro/argento foglia Opaque White/black-gold/silver foil decorations		**B** Bianco/nero opaco-decorazioni oro/argento foglia Opaque White/black-gold/silver foil decorations
Con-with **1** EURO 16.644,10	Con-with **2** EURO 20.281,80	Con-with **3** EURO 16.237,10	Con-with **4** EURO 17.771,60
A Bianco/nero lucido-oro/argento Gloss white/black-gold/silver foil	**C1**+**C**+**E**+**D** Bianco/nero opaco-decorazioni oro/argento foglia Opaque White/black-gold/silver foil decorations		**B** Bianco/nero opaco-decorazioni oro/argento foglia Opaque White/black-gold/silver foil decorations
Con-with **1** EURO 15.779,50	Con-with **2** EURO 19.352,30	Con-with **3** EURO 15.307,60	Con-with **4** EURO 16.842,10
A Cracklè avorio+decorazioni argento/oro foglia Ivory cracklè+silver/gold foil decoration	**C1**+**C**+**E**+**D** Laccato avorio opaco+decorazioni argento/oro foglia Ivory opaque laquering+silver/gold foil decoration		**B** Cracklè avorio+decorazioni argento/oro foglia Ivory cracklè+silver/gold foil decoration
Con-with **1** EURO 15.384,60	Con-with **2** EURO 19.010,20	Con-with **3** EURO 14.967,70	Con-with **4** EURO 16.500,00
A Oro/argento patinato avorio/bianco+decoraz oro/arg Gold/silver foil+ivory/white patina+gold/silver decorations	**C1**+**C**+**E**+**D** Laccato avorio/bianco opaco+decorazioni argento/oro foglia Ivory/white opaque laquering+silver/gold foil decoration		**B** Oro/argento patinato avorio/bianco+decoraz oro/arg Gold/silver foil+ivory/white patina+gold/silver decorations
Con-with **1** EURO 15.357,10	Con-with **2** EURO 18.988,20	Con-with **3** EURO 14.945,70	Con-with **4** EURO 16.470,30

THE WALL HOME CINEMA - CLASSIC

Struttura per Home Cinema - a parete
Home Cinema - Wall Rack

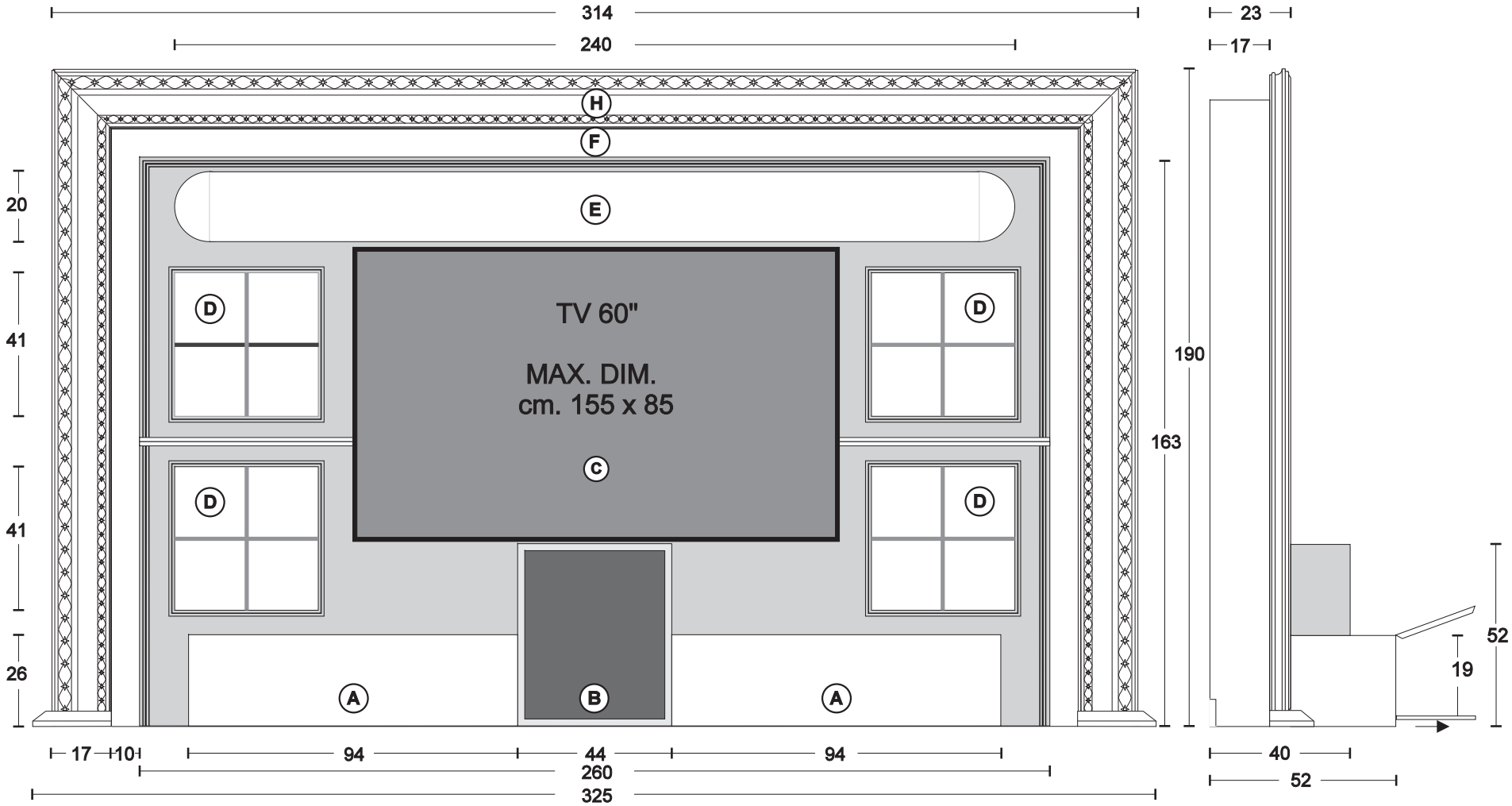

B+C	ORO/ARGENTO FOGLIA (gold/silver foil)	A+D+E+F	METALTITANIO	H	ORO/ARGENTO FOGLIA (gold/silver foil)	€ 12.817,20
B+C	ORO/ARGENTO FOGLIA (gold/silver foil)	A+D+E+F	BIANCO/NERO (white/black)	H	BIANCO/NERO LUCIDO+decorazioni oro/argento foglia+Crystal stones (gloss white/black+gold/silver foil decorations+crystal stones)	€ 16.164,50
B+C	ORO/ARGENTO FOGLIA (gold/silver foil)	A+D+E+F	BRONZO (bronze)	H	BRONZO+decorazioni oro/argento foglia+Crystal stones (bronze+gold/silver foil decorations+crystal stones)	€ 15.551,80
H+C	CRACKLE' AVORIO-decoraz argento/oro (Ivory cracklè-silver/gold foil decoration)	A+D+E+F	AVORIO OPACO (Ivory opaque laquered)	B	ARGENTO/ORO FOGLIA (silver/gold foil)	€ 13.073,50

THE FRAME HOME CINEMA - CLASSIC

Struttura per Home Cinema - a parete (con luci retro-pannello diffuse)
Home Cinema - Wall Rack (with spreading back-panel lighting)

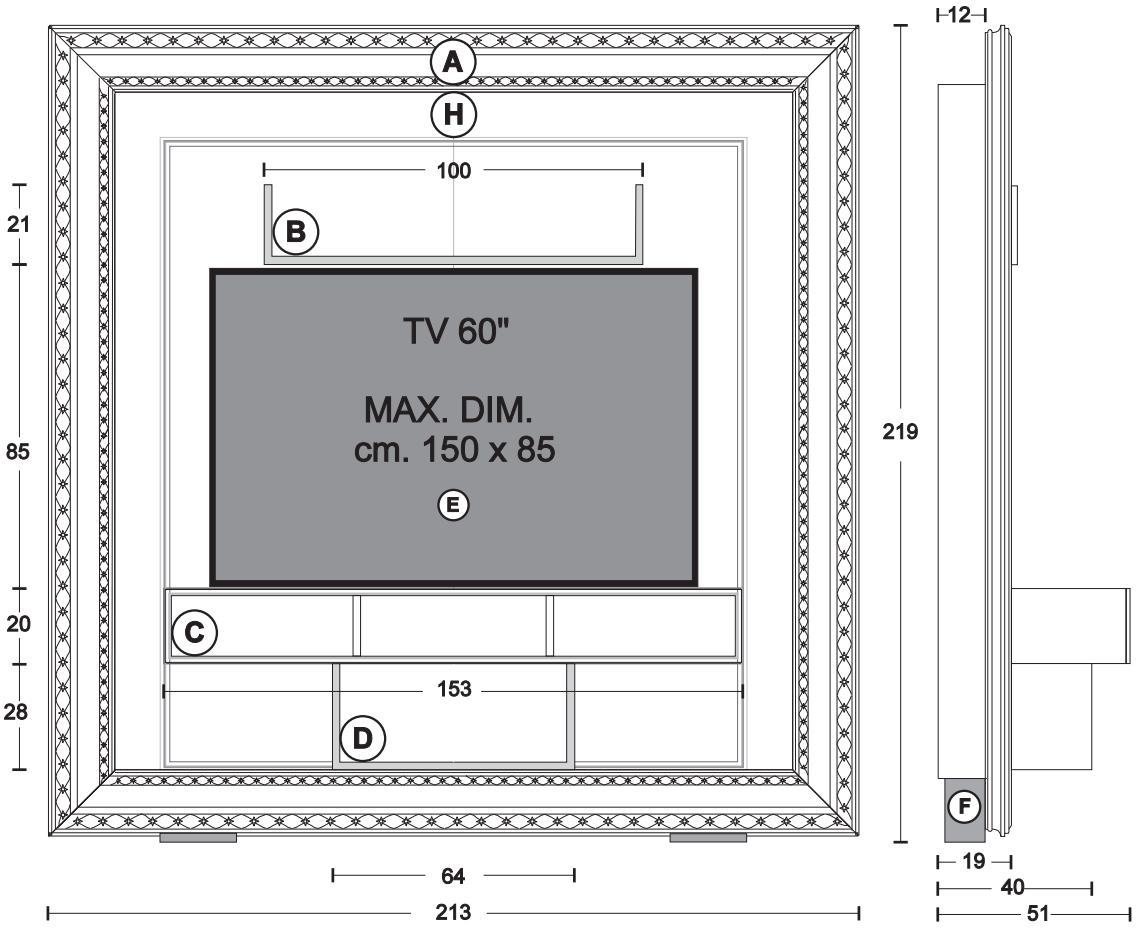

Finiture e combinazioni - Finishings and combinations

A+C	ORO/ARGENTO FOGLIA (gold foil-goldfolie)	B+D+E+F	METALTITANIO	H	METALGOLD/ METALSILVER			€ 7.716,50
A+C	TUTTI I LACCATI (all our laquering)	B+D+E+F	METALSILVER	H	METALSILVER			€ 7.716,50
A	NERO LUCIDO decorazioni argento foglia+Crystal Stones (gloss black+silver foil decorations +Crystal Stones)	C+B+D+F	NERO (black)	H	METALSILVER	E	ARGENTO FOGLIA(silver foil)	€ 11.491,70
A	BIANCO LUCIDO decorazioni argento foglia (gloss white+silver foil decorations)	C+B+D+F	BIANCO(white)	H	METALSILVER	E	ARGENTO FOGLIA(silver foil)	€ 10.071,60
A+C	BRONZO decorazioni Oro/Argento Foglia+Crystal Stones) (Bronze+Gold/Silver Foil decorations+Crystal Stones)	B+D+F	BRONZO(bronze)	H	METALGOLD/ METALSILVER	E	ORO/ARGENTO FOGLIA(gold/silver foil)	€ 10.920,80
A+C	ARGENTO patinato BIANCO (silver foil+white patina)	B+D+E+F	BIANCO OPACO Decorazioni argento foglia (Opaque white+Silver foil decoration)	H	METALSILVER			€ 7.804,50
A+C	ORO patinato AVORIO (gold foil+ivory patina)	B+D+E+F	AVORIO OPACO Decorazioni oro foglia (Opaque ivory+gold foil decoration)	H	METALGOLD			€ 7.804,50
A+C+E	CRACKLE' AVORIO(Ivory cracklè) (Decorazioni argento/oro foglia-silver/gold foil decoration)	B+D+F+H	LACCATO AVORIO OPACO (Ivory opaque laquered)					€ 8.008,00

THE FRAME CONTAINER-BAR - CLASSIC

Mobile con scaffali a giorno e ante scorrevoli - a parete (con led bianchi sotto piani orizzontali) ①②③④
Open wall-container, with sliding doors- Horizontal shelves enlightened by white LEDs ①②③④

-Sezione
-Section

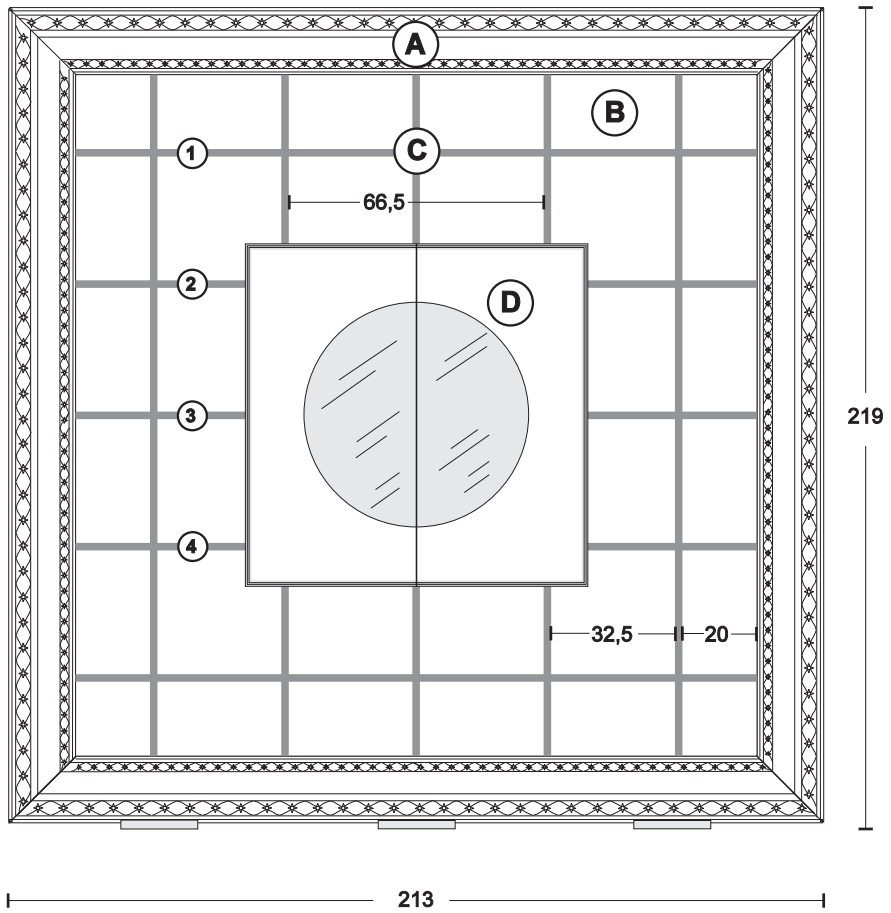

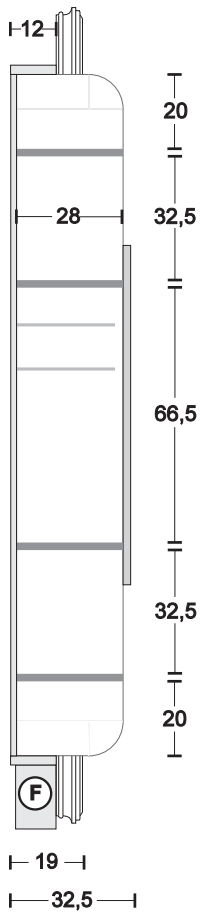

Finiture e combinazioni - Finishings and combinations

(A) ORO/ARGENTO FOGLIA (gold/silver foil)	(B) ORO/ARGENTO FOGLIA (gold/silver foil)	(C)+(F) TUTTI I LACCATI (all our laquering)	(D) TUTTI I LACCATI (all our laquering)	€ 11.341,00
(A) TUTTI I LACCATI (all our laquering)	(B) ARGENTO FOGLIA (silver foil)	(C)+(F) TUTTI I LACCATI (all our laquering)	(D) TUTTI I LACCATI (all our laquering)	€ 11.341,00
(A) BIANCO LUCIDO decorazioni argento foglia (gloss white-silver foil decorations)	(B) ARGENTO FOGLIA (silver foil)	(C)+(F) BIANCO (white)	(D) BIANCO LUCIDO (gloss-white)	€ 12.036,20
(A) NERO LUCIDO decorazioni argento foglia +Crystal Stones (gloss black+silver foil decorations+Crystal stones)	(B) ARGENTO FOGLIA (silver foil)	(C)+(F) NERO (black)	(D) NERO LUCIDO (gloss black)	€ 14.756,50
(A) BRONZO -BRONZE decorazioni oro/argento foglia +Crystal Stones (bronze+gold/silver foil decorations+Crystal stones)	(B) Oro/Argento Foglia (Gold/Silver Foil)	(C)+(F) BRONZO (bronze)	(D) BRONZO (bronze)	€ 14.547,50
(A) ARGENTO patinato bianco (silver foil+white patina)	(B) ARG. FOGLIA (silver foil)	(C)+(F) BIANCO OPACO (opaque white)	(D) BIANCO OPACO Decorazioni argento foglia (opaque white+silver foil decorations)	€ 11.454,30
(A) ORO patinato avorio (gold foil+ivory patina)	(B) ORO FOGLIA (gold foil)	(C)+(F) AVORIO OPACO (opaque ivory)	(D) AVORIO OPACO Decorazioni oro foglia (opaque ivory+gold foil decorations)	€ 11.454,30
(A)+(D) CRACKLE' AVORIO decorazioni argento/oro foglia (Ivory cracklè+silver/gold foil decorations)	(B) ORO/ARGENTO FOGLIA (gold/silver foil)	(C)+(F) LACCATO AVORIO (Ivory opaque laquering)		€ 11.543,40

THE FRAME "BIG MIRROR" - CLASSIC

Specchio a parete completo di consolle a 2 cassetti e vano a giorno - led bianchi perimetrali - bolle perimetrali su specchio
Wall-mirror with 2-drawer-consolle and open compartment- white leds on perimeter- bubbles on mirror border

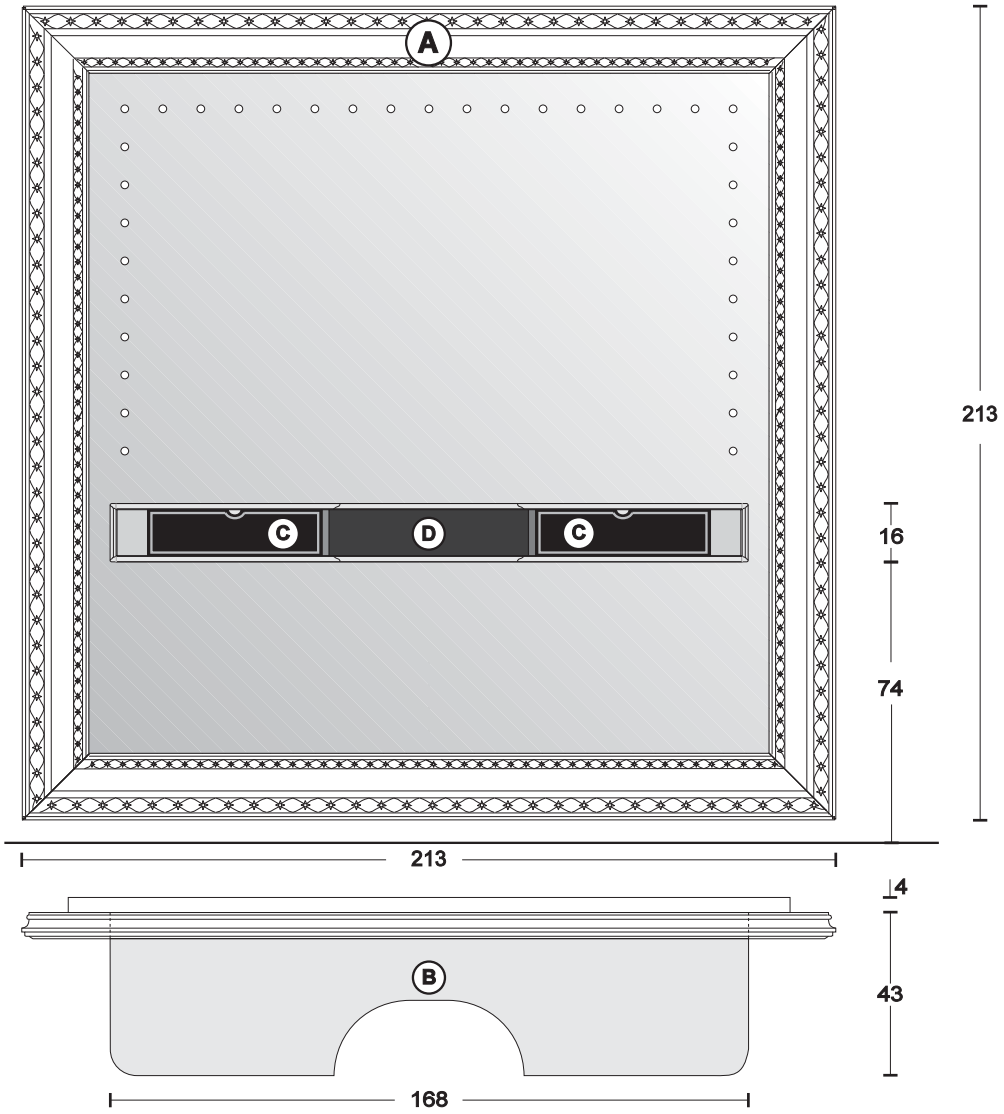

Finiture e combinazioni - Finishings and combinations

A ORO/ARGENTO FOGLIA (gold/silver foil)	B ORO/ARGENTO FOGLIA (gold/silver foil)	C TUTTI I LACCATI (all our laquering)	D TUTTI I LACCATI (all our laquering)	€ 8.741,70
A NERO/BIANCO (black/white)	B ARGENTO FOGLIA (silver foil)	C NERO/BIANCO (black/white)	D NERO/BIANCO (black/white)	€ 8.741,70
A BIANCO LUCIDO decorazioni argento foglia (gloss white-silver foil decorations)	B ARGENTO FOGLIA (silver foil)	C BIANCO LUCIDO (gloss-white)	D BIANCO (white)	€ 9.138,80
A NERO LUCIDO decorazioni argento foglia +Crystal Stones (silver foil decorations+crystal stones)	B ARGENTO FOGLIA (silver foil-Silberfolie)	C NERO LUCIDO (gloss black)	D NERO (black)	€ 10.266,30
A BRONZO Oro/Argento Foglia+Crystal Stones (bronze+Gold/Silver Foil+Crystal Stones)	B ORO/ARGENTO FOGLIA (gold/silver foil)	C BRONZO (bronze)	D BRONZO (bronze)	€ 10.068,30
A + B ARGENTO FOGLIA patinato bianco (silver foil+white patina)		C BIANCO+decorazioni argento foglia (white+silver foil decoration)	D BIANCO (white)	€ 8.868,20
A + B ORO FOGLIA patinato avorio (gold foil+ivory patina)		C AVORIO+decorazioni oro foglia (ivory+gold foil decoration)	D AVORIO (ivory)	€ 8.868,20
A + B CRACKLE' AVORIO(Ivory cracklè) Decorazioni argento/oro foglia (Silver/gold foil decorations)		C ARGENTO/ORO foglia (Silver/gold foil)	D AVORIO (Ivory)	€ 8.943,00

STAR GATE - CLASSIC

Struttura per Home Cinema - a parete (con luci retro-pannello diffuse)
Home Cinema - Wall Rack (with spreading back-panel lighting)

-Sezione
-Section

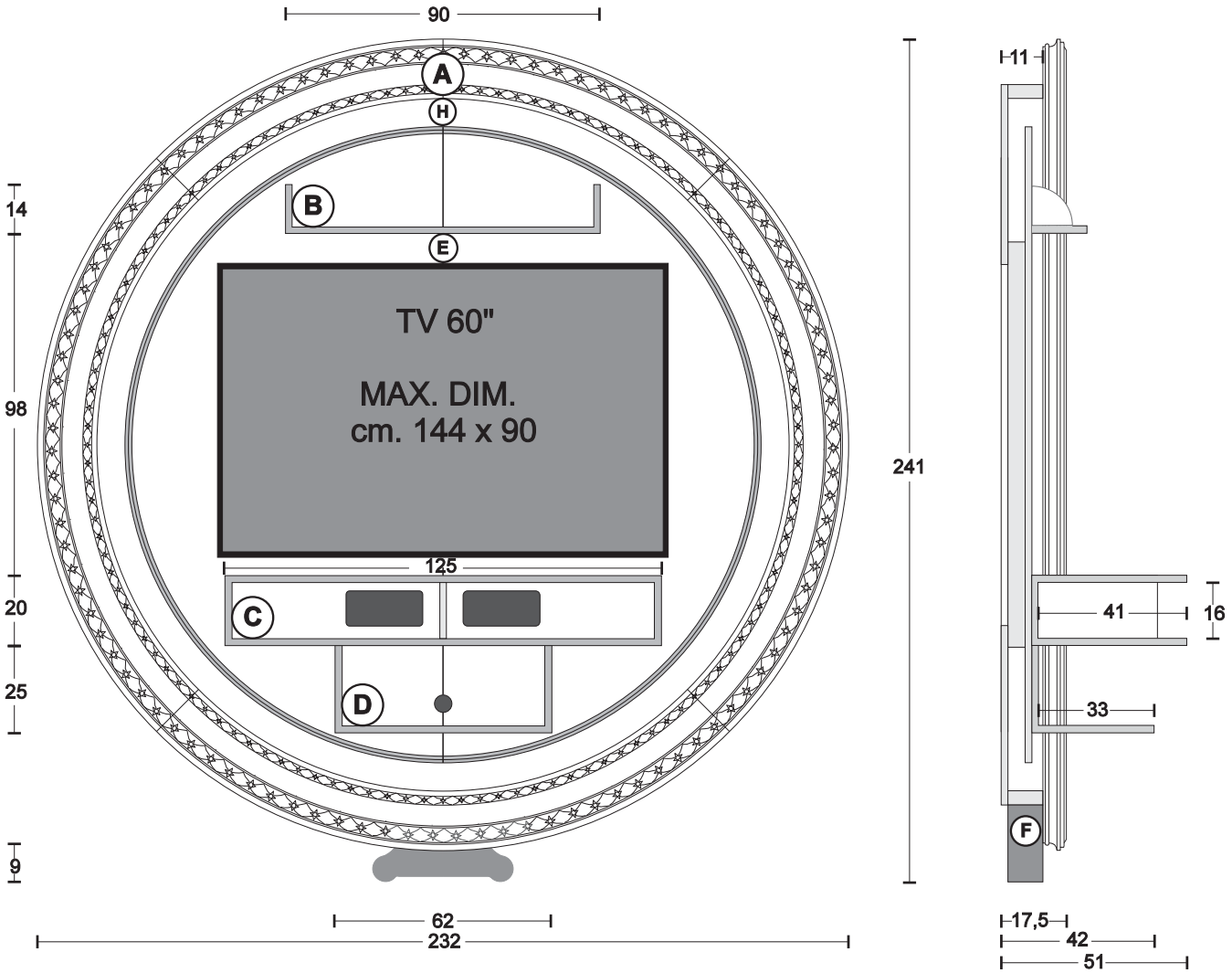

Finiture e combinazioni - Finishings and combinations

A+C	ORO/ARG FOGLIA (gold/silver foil)	B+D+E+F	TUTTI I LACCATI (all our laquering)	H TUTTI I LACCATI (all our laquering)	€ 10.446,70
A+C	NERO/BIANCO (black/white)	B+D+E+F	TUTTI I LACCATI (all our laquering)	H TUTTI I LACCATI (all our laquering)	€ 9.973,70
A	NERO LUCIDO decorazioni argento foglia +Crystal Stones (gloss black+silver foil decorations +Crystal Stones)	C+B+D+F	NERO (black) E ARGENTO FOGLIA(silver foil)	H METALSILVER	€ 13.933,70
A	BIANCO LUCIDO decorazioni argento foglia +Crystal Stones (gloss white+silver foil decorations +Crystal Stones)	C+B+D+F	BIANCO (white) E ARGENTO FOGLIA(silver foil)	H METALSILVER	€ 12.247,40
A+C	BRONZO Oro/Argento Foglia+Crystal Stones (bronze+Gold/Silver Foil+Crystal Stones)	B+D+F	BRONZO (bronze) E ORO/ARGENTO FOGLIA (gold/silver foil)	H METALGOLD/METALSILVER	€ 13.642,20
A+C	ORO/ARGENTO foglia patinato avorio/bianco (gold/silver foil+ivory/white patina)	B+D+E+F	AVORIO/BIANCO decorazioni argento foglia (Opaque ivory/white+silver foil decoration)	H METALGOLD/ METALSILVER	€ 10.536,90
A+C+E	CRACKLE' AVORIO decorazioni argento/oro foglia (Ivory cracklè+silver/gold foil decorations)	B+D+F+H	LACCATO AVORIO OPACO (Ivory opaque laquering)		€ 10.727,20

STAR GATE CONTAINER-BAR - CLASSIC

Mobile con scaffali a giorno e ante scorrevoli - a parete (con led bianchi sotto piani orizzontali) ①②③④
Open wall-container, with sliding doors- Horizontal shelves enlightened by white LEDs ①②③④

-Sezione
-Section

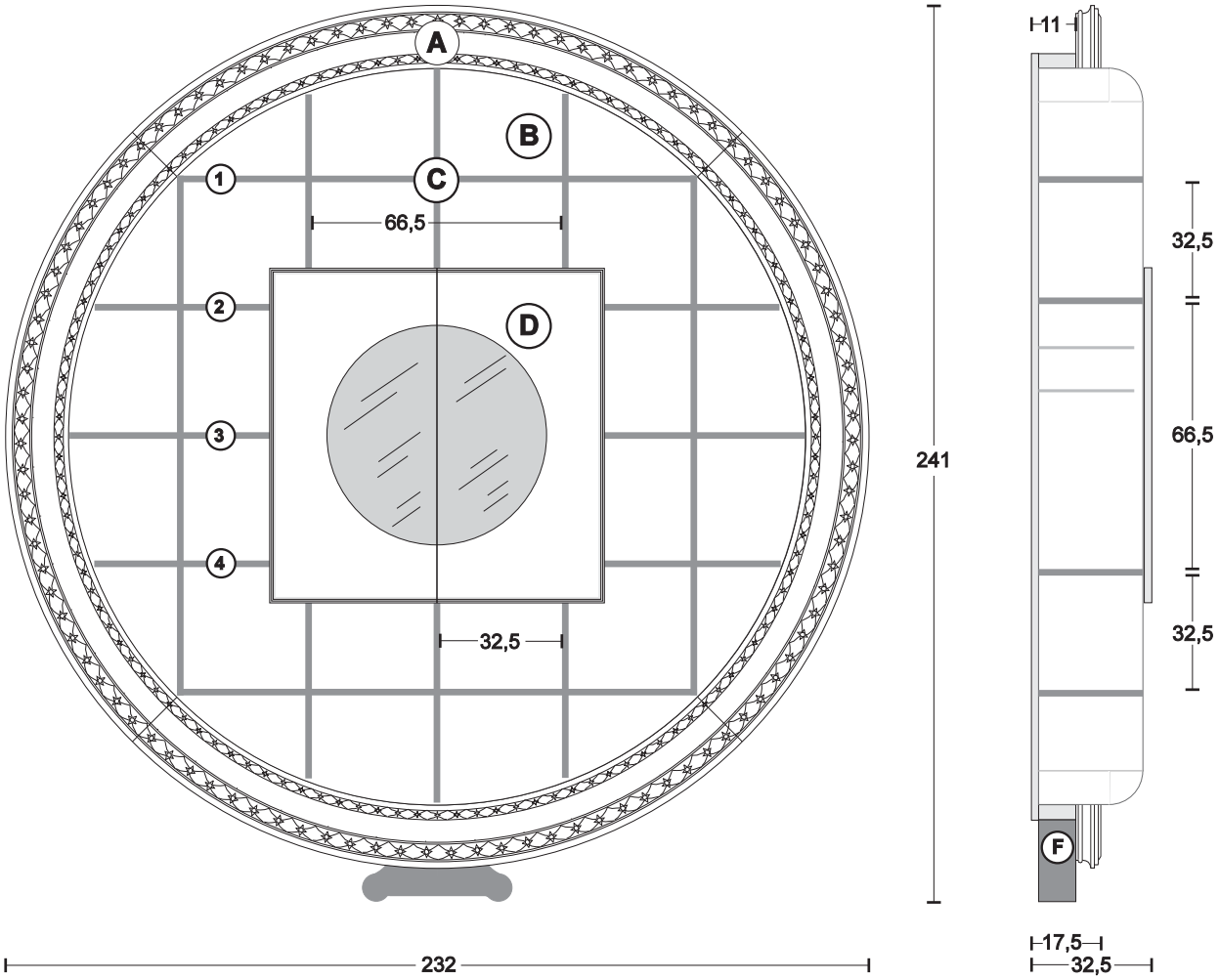

Finiture e combinazioni - Finishings and combinations

(A) ORO/ARGENTO FOGLIA (gold/silver foil)	(B) ORO/ARG FOGLIA (gold/silver foil)	(C)+(F) TUTTI I LACCATI (all our laquering)	(D) TUTTI I LACCATI (all our laquering)	€ 14.070,10
(A) NERO/BIANCO (black/white)	(B) ARGENTO FOGLIA (silver foil-Silberfolie)	(C)+(F) NERO/BIANCO (black/white)	(D) NERO/BIANCO (black/white)	€ 13.599,30
(A) BIANCO LUCIDO decorazioni argento foglia (gloss white-silver foil decorations)	(B) ARGENTO FOGLIA (silver foil)	(C)+(F) BIANCO (white)	(D) BIANCO LUCIDO (gloss-white)	€ 14.630,00
(A) NERO LUCIDO decorazioni argento foglia +Crystal Stones (gloss black-silver foil decorations-crystal stones)	(B) ARGENTO FOGLIA (silver foil)	(C)+(F) NERO (black)	(D) NERO LUCIDO (gloss black)	€ 17.083,00
(A) BRONZO Oro/Argento Foglia+Crystal Stones (bronze+Gold/Silver Foil+Crystal Stones)	(B) Oro/Argento Foglia Gold/Silver Foil	(C)+(F) BRONZO (bronze)	(D) BRONZO (bronze)	€ 16.711,20
(A) ARGENTO patinato bianco (silver foil+white patina)	(B) ARG. FOGLIA (silver foil)	(C)+(F) BIANCO (white)	(D) BIANCO OPACO decorazioni argento foglia (white laquering+silver foil decorations)	€ 14.186,70
(A) ORO patinato avorio (gold foil+ivory patina)	(B) ORO FOGLIA (gold foil)	(C)+(F) AVORIO (Ivory)	(D) AVORIO OPACO decorazioni oro foglia (ivory laquering+gold foil decorations)	€ 14.186,70
(A)+(D) CRACKLE' avorio decorazioni argento/oro foglia (Ivory cracklè+silver/gold foil decorations)	(B) ORO/ARGENTO FOGLIA (gold/silver foil)		(C)+(F) AVORIO OPACO (ivory laquering)	€ 14.275,80

STAR GATE "BIG MIRROR" - CLASSIC

Specchio a parete completo di consolle a 2 cassetti e vano a giorno - led bianchi perimetrali - bolle perimetrali su specchio
Wall-mirror with 2-drawer-consolle and open compartment- white leds on perimeter- bubbles on mirror border

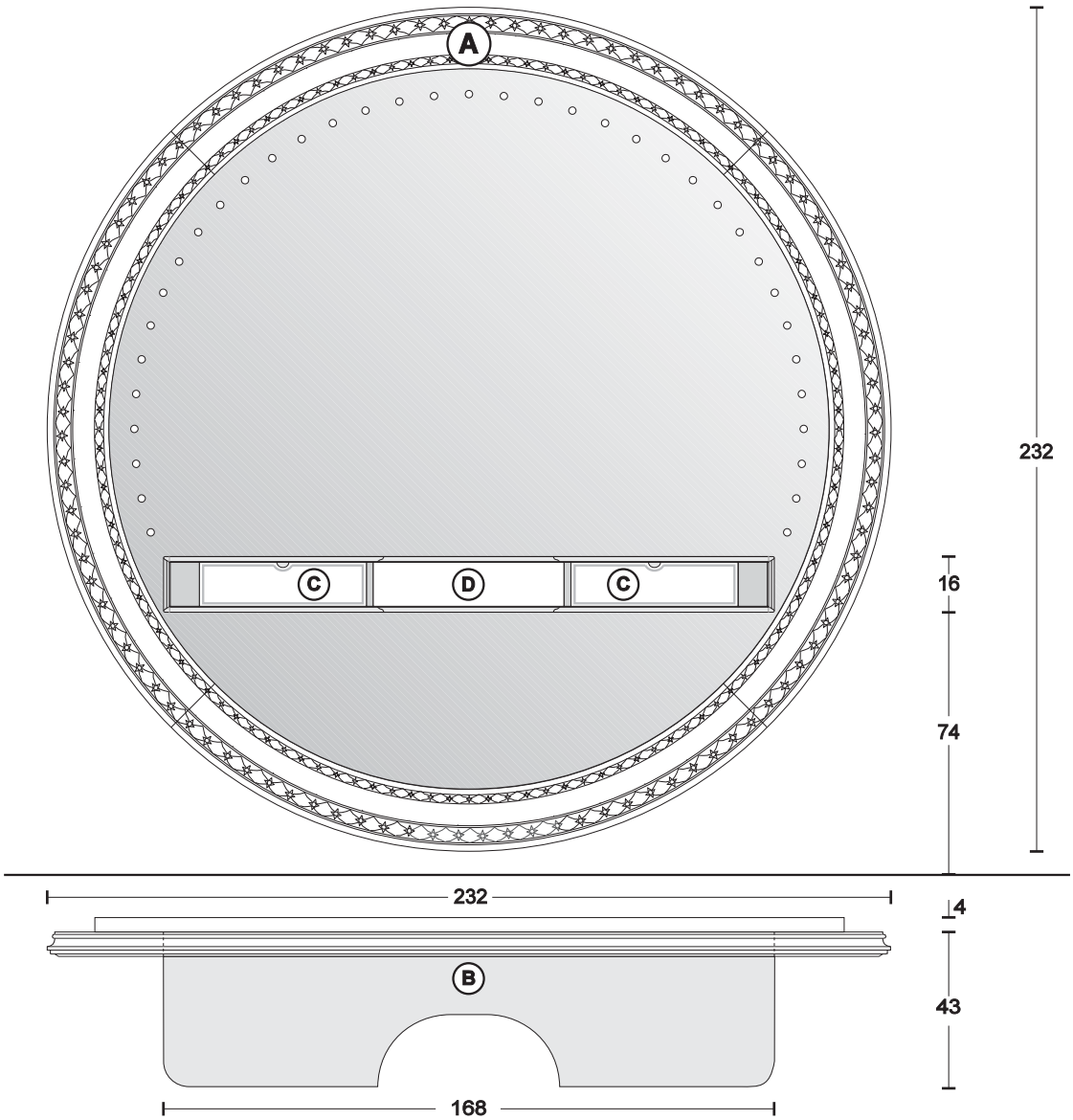

Finiture e combinazioni - Finishings and combinations

A ORO/ARGENTO FOGLIA (gold/silver foil)	B ORO/ARG FOGLIA (gold/silver foil)	C TUTTI I LACCATI (all our laquering)	D TUTTI I LACCATI (all our laquering)	€ 9.456,70
A NERO/BIANCO (black/white)	B ARGENTO FOGLIA (silver foil)	C NERO/BIANCO (black/white)	D NERO/BIANCO (black/white)	€ 8.955,10
A BIANCO LUCIDO decorazioni argento foglia (gloss white-silver foil decorations)	B ARGENTO FOGLIA (silver foil)	C BIANCO LUCIDO (gloss white)	D BIANCO (gloss)	€ 10.150,80
A NERO LUCIDO decorazioni argento foglia +Crystal Stones (gloss black-silver foil decorations-crystal stones)	B ARGENTO FOGLIA (silver foil)	C NERO LUCIDO (gloss black)	D NERO (black)	€ 11.269,50
A BRONZO Oro/Argento Foglia+Crystal Stones (bronze+Gold/Silver Foil+Crystal Stones)	B Oro/Argento Foglia Gold/Silver Foil	C BRONZO (bronze)	D BRONZO (bronze)	€ 10.990,10
A+B ARGENTO patinato bianco (silver foil+white patina)		C BIANCO decorazioni argento foglia (white+silver foil decoration)	D BIANCO (white)	€ 9.512,80
A+B ORO patinato avorio (gold foil+ivory patina)		C AVORIO decorazioni oro foglia (ivory+gold foil decoration)	D AVORIO (ivory)	€ 9.512,80
A+B CRACKLE' AVORIO+decorazioni oro/argento (ivory cracklè+silver/gold foil decorations)		C ORO/ARGENTO foglia (gold/silver foil)	D AVORIO (ivory)	€ 9.652,50

FRAME - 214 CLASSIC-MIRROR

SPECCHIERA A PARETE - WALL MIRROR

TUTTI I LACCATI (all our laquering)	€ 2.302,30
ORO/ARG foglia(gold /silver foil)	€ 2.734,60
Bronzo con Oro/Argento Foglia+Crystal Stones (Bronze with Gold/Silver Foil+Crystal Stones)	€ 4.042,50
Bianco Lucido decorazioni argento foglia (Gloss white+silver foil decoration)	€ 3.069,00
Nero Lucido decoraz argento foglia+crystal stones Gloss black+silver foil decorations+crystal stones	€ 4.283,40
ORO/ARG foglia patinato avorio/bianco (gold/sliver foil+ivory/white patina)	€ 2.827,00
CRACKLE' AVORIO+decoraz oro/argento foglia (Ivory cracklè+gold/silver foil decorations)	€ 2.924,90

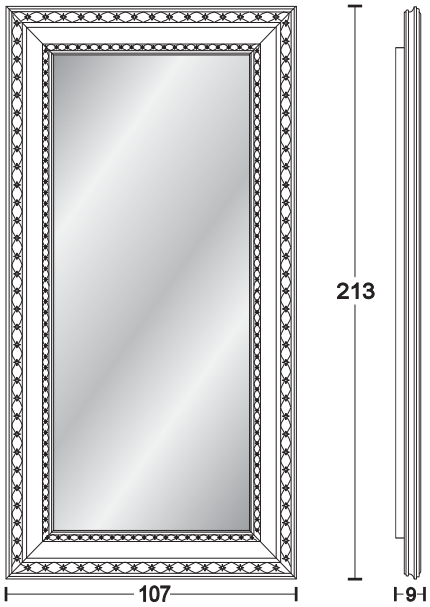

FRAME - 214 CLASSIC - SOLO FRAME

SOLO CORNICE - JUST FRAME

TUTTI I LACCATI (all our laquering)	€ 1.964,60
ORO/ARG foglia(gold /silver foil)	€ 2.388,10
Bronzo con Oro/Argento Foglia+Crystal Stones (Bronze with Gold/Silver Foil+Crystal Stones)	€ 3.688,30
Bianco Lucido decorazioni argento foglia (Gloss white+silver foil decoration)	€ 2.734,60
Nero Lucido decoraz argento foglia+crystal stones Gloss black+silver foil decorations+crystal stones	€ 4.061,20
ORO/ARG foglia patinato avorio/bianco (gold/sliver foil+ivory/white patina)	€ 2.479,40
CRACKLE' AVORIO+decoraz oro/argento foglia (Ivory cracklè+gold/silver foil decorations)	€ 2.568,50

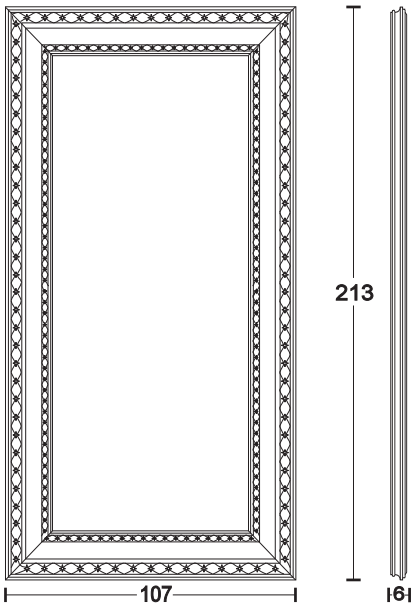

BODY ROUND LIGHT-CLASSIC

CORPO ILLUMINANTE A PARETE - WALL BODY LIGHT

ORO/ARG foglia(gold /silver foil)	€ 3.073,40
Bronzo con Oro/Argento Foglia+Crystal Stones (Bronze with Gold/Silver Foil+Crystal Stones)	€ 3.569,50
Bianco Lucido decorazioni argento foglia (Gloss white+silver foil decoration)	€ 3.207,60
Nero Lucido decoraz argento foglia+crystal stones Gloss black+silver foil decorations+crystal stones	€ 3.709,20
ORO/ARG foglia patinato avorio/bianco (gold/sliver foil+ivory/white patina)	€ 3.125,10
CRACKLE' AVORIO+decoraz oro/argento foglia (Ivory cracklè+gold/silver foil decorations)	€ 3.175,70

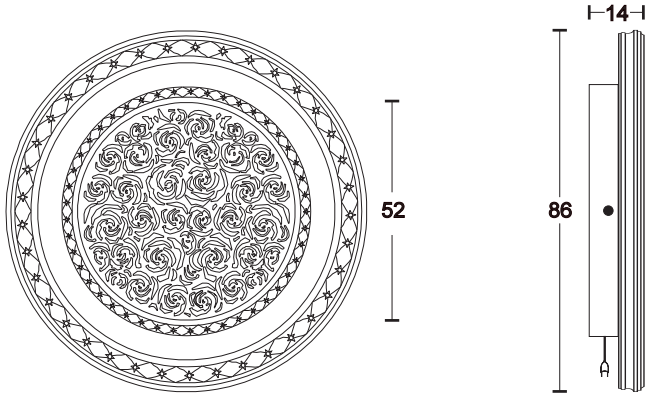

Pannello frontale traforato Nero/bianco con tamponatura oro/argento foglia.
Completo di interruttore e spina elettrica (220 Volts)
Frontal board in black/white colour with gold or silver foil shadings provided with switch and plug (220 volts)

BODY ROUND MIRROR-CLASSIC

SPECCHIERA A PARETE - WALL MIRROR

ORO/ARG foglia(gold /silver foil)	€ 1.948,10
Bronzo con Oro/Argento Foglia+Crystal Stones (Bronze with Gold/Silver Foil+Crystal Stones)	€ 2.401,30
Bianco Lucido decorazioni argento foglia (Gloss white+silver foil decoration)	€ 2.101,00
Nero Lucido decoraz argento foglia+crystal stones Gloss black+silver foil decorations+crystal stones	€ 2.517,90
ORO/ARG foglia patinato avorio/bianco (gold/sliver foil+ivory/white patina)	€ 1.998,70
CRACKLE' AVORIO+decoraz oro/argento foglia (Ivory cracklè+gold/silver foil decorations)	€ 2.049,30

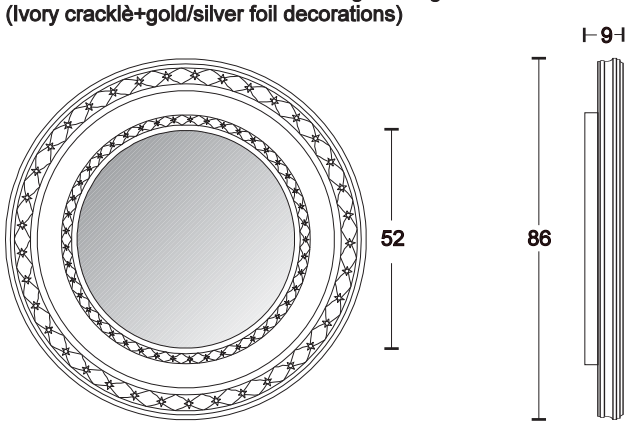

FRAME - 120 CLASSIC

Elemento porta CD-DVD a parete
Wall CD-DVD rack

Cornice:TUTTI I LACCATI(frame:all our laquering) **€ 2.138,40**
Interno:TUTTI I LACCATI(inside:all our laquering)

Cornice:ORO/ARGENTO FOGLIA(frame:gold/silver foil) **€ 2.403,50**
Interno:METALTITANIO(inside:metaltitanio)

Cornice:Bronzo con Oro/Argento Foglia+Crystal Stones **€ 3.355,00**
(frame:Bronze with Gold/Silver Foil+Crystal Stones)
Interno:BRONZO(inside:bronze)

Cornice: NERO LUCIDO con argento foglia+Crystal Stones **€ 3.523,30**
(frame:gloss black+silver foil decorations+Crystal Stones)
Interno:METALBLACK(inside:metalblack)

Cornice:ORO/ARGENTO foglia patinato avorio/bianco **€ 2.454,10**
(frame:gold/silver foil+ivory/white patina)
Interno:BIANCO(inside:white)

Cornice:CRACKLE' AVORIO+decorazioni oro/argento foglia **€ 2.504,70**
(frame:ivory cracklè+gold/silver decorations-inside:ivory)
Interno: AVORIO(inside:ivory)

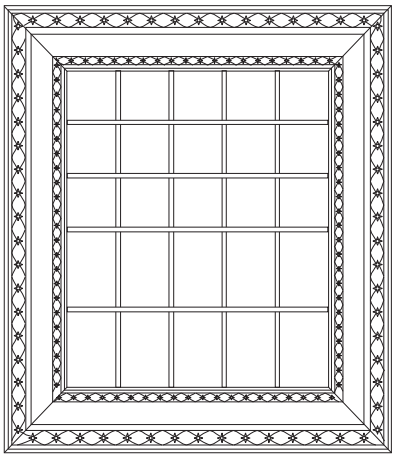

art.: F12-3C3V
234 CD + 90 DVD

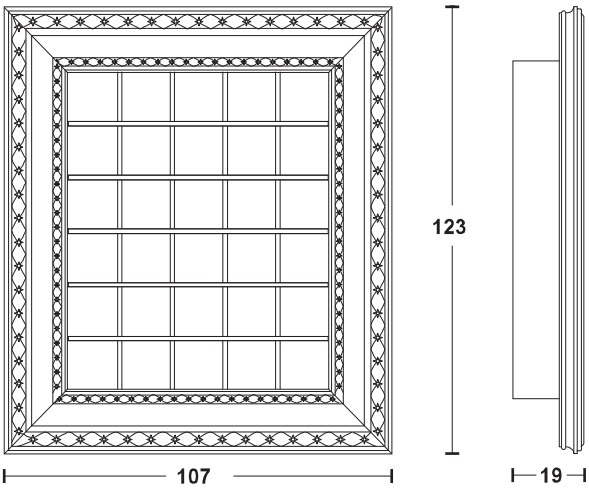

art.: F12-6C
390 CD

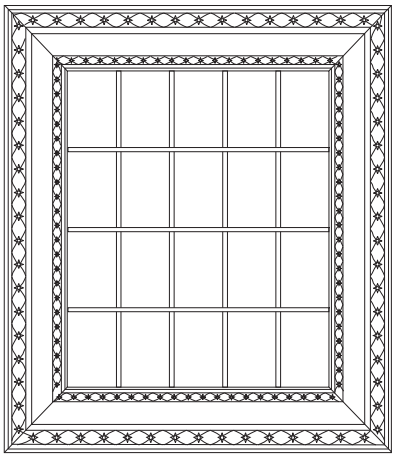

art.:.F12-4V
180 DVD

FRAME 120 CLASSIC-MIRROR

Specchiera a parete - Wall Mirror

Cornice:TUTTI I LACCATI(frame:all our laquering) **€ 1.738,00**
Interno:TUTTI I LACCATI(inside:all our laquering)

Cornice:ORO/ARGENTO FOGLIA(frame:gold/silver foil) **€ 1.992,10**
Interno:METALTITANIO(inside:metaltitanio)

Cornice:Bronzo con Oro/Argento Foglia+Crystal Stones **€ 2.942,50**
(frame:Bronze with Gold/Silver Foil+Crystal Stones)
Interno:BRONZO(inside:bronze)

Cornice: NERO LUCIDO con arg foglia+Crystal Stones **€ 3.096,50**
(frame:gloss black+silver foil decorations+Crystal Stones)
Interno:METALBLACK(inside:metalblack)

Cornice:ORO/ARGENTO foglia patinato avorio/bianco **€ 2.042,70**
(frame:gold/silver foil+ivory/white patina)
Interno:BIANCO(inside:white)

Cornice:CRACKLE' AVORIO+decoraz oro/argento foglia **€ 2.093,30**
(frame:ivory cracklè+gold/silver decorations-inside:ivory)
Interno: AVORIO(inside:ivory)

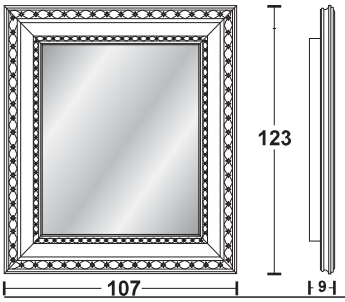

FRAME 120 CLASSIC - SOLO FRAME

Solo cornice - Just frame

Cornice:TUTTI I LACCATI(frame:all our laquering) **€ 1.525,70**
Interno:TUTTI I LACCATI(inside:all our laquering)

Cornice:ORO/ARGENTO FOGLIA(frame:gold/silver foil) **€ 1.786,40**
Interno:METALTITANIO(inside:metaltitanio)

Cornice:Bronzo con Oro/Argento Foglia+Crystal Stones **€ 2.747,80**
(frame:Bronze with Gold/Silver Foil+Crystal Stones)
Interno:BRONZO(inside:bronze)

Cornice: NERO LUCIDO con arg foglia+Crystal Stones **€ 2.901,80**
(frame:gloss black+silver foil decorations+Crystal Stones)
Interno:METALBLACK(inside:metalblack)

Cornice:ORO/ARGENTO foglia patinato avorio/bianco **€ 1.837,00**
(frame:gold/silver foil+ivory/white patina)
Interno:BIANCO(inside:white)

Cornice:CRACKLE' AVORIO+decoraz oro/argento foglia **€ 1.887,60**
(frame:ivory cracklè+gold/silver decorations-inside:ivory)
Interno: AVORIO(inside:ivory)

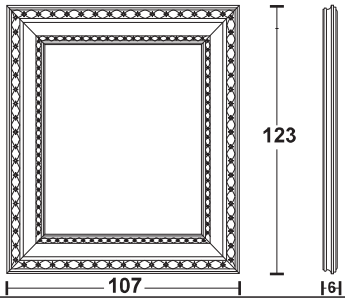

FRAME - 214 CLASSIC

Elemento porta CD-DVD a parete
Wall CD-DVD-VHS rack

cornice:NERO-interno:METALSILVER/METALTITANIO (frame:black-inside:metalsilver/metaltitanio)	**€ 3.147,10**
corniceORO/ARGENTO:interno:METALTITANIO (frame:GOLD/SILVER FOIL:inside:metaltitanio	**€ 3.589,30**
cornice:BRONZO+ORO/ARGENTO+Crystal Stones interno:BRONZO (frame:bronze+gold/silver foil+crystal stones inside:bronze)	**€ 4.895,00**
cornice:BIANCO LUCIDO+decorazioni argento foglia interno:BIANCO (frame:gloss white+silver foil decorations-inside:white)	**€ 3.934,70**
cornice:NERO LUCIDO+decorazioni argento foglia +Crystal Stones-interno:NERO (frame:gloss black+silver foil decorations+Crystal Stones inside:black)	**€ 5.132,60**
cornice:ARGENTO patinato bianco-interno:BIANCO (frame:silver foil+white patina-inside:white)	**€ 3.681,70**
cornice:ORO foglia patinato avorio-interno:AVORIO (frame:gold foil+ivory patina-inside:ivory)	**€ 3.681,70**
cornice:CRACKLE' AVORIO+decorazioni oro/argento interno:AVORIO (frame:ivory cracklè+gold/silver decorations-inside:Ivory)	**€ 3.778,50**

art. F214-9C2V
585 CD+90 DVD

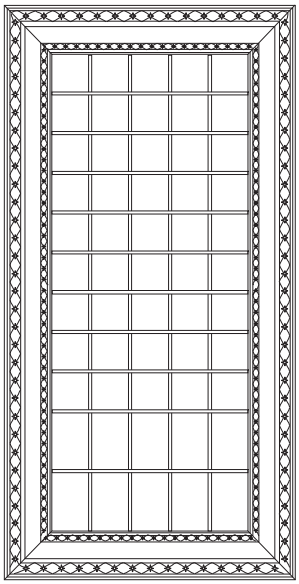

art. F214-6C4V
390 CD+180 DVD

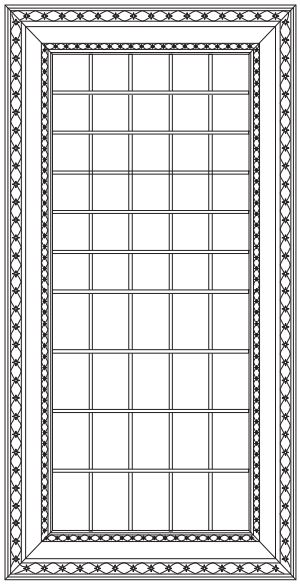

art. F214-12C
780 CD

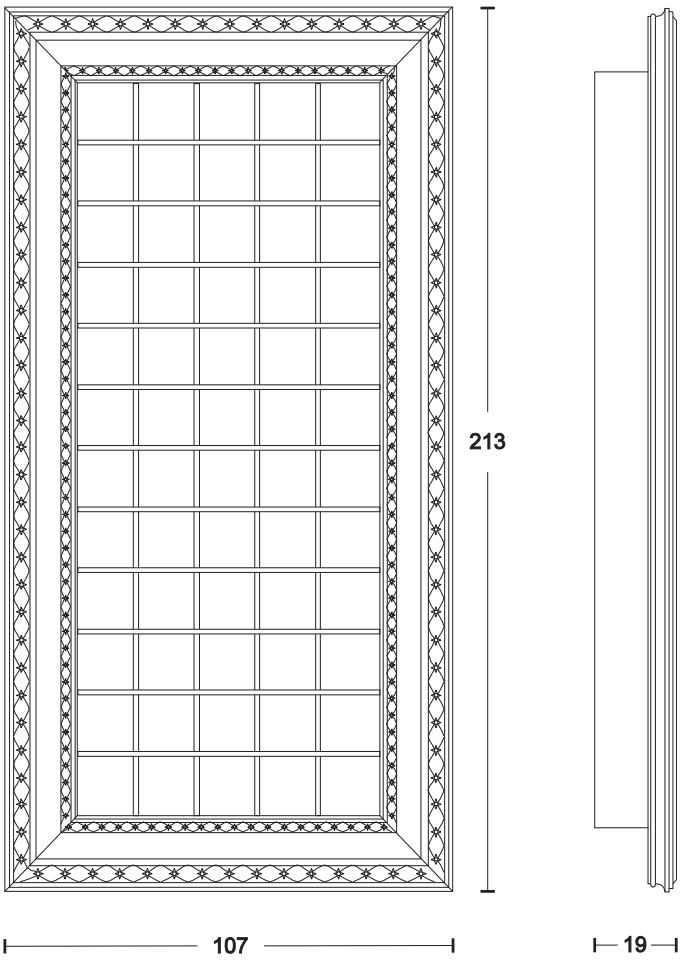

art. F214-3C6V
234 CD+270 DVD

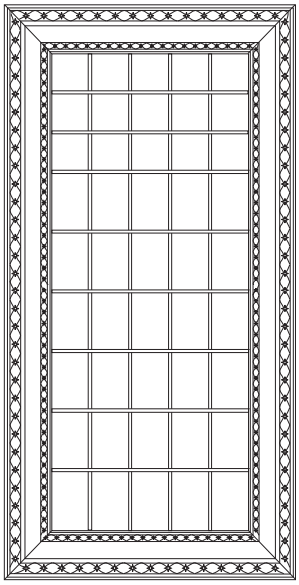

art. F214-8V
360 DVD

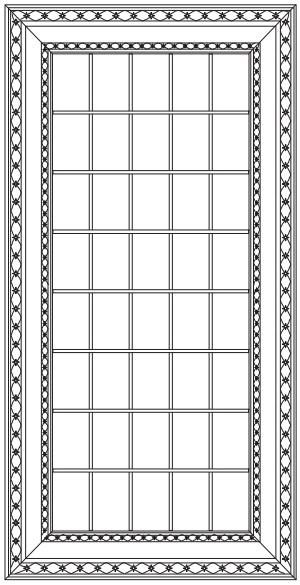

BODY LIGHT - CLASSIC

Corpo illuminante a parete
Wall Body-light

Completo di interruttore e spina elettrica (220 V.)
provided with switch and plug (220 volts)

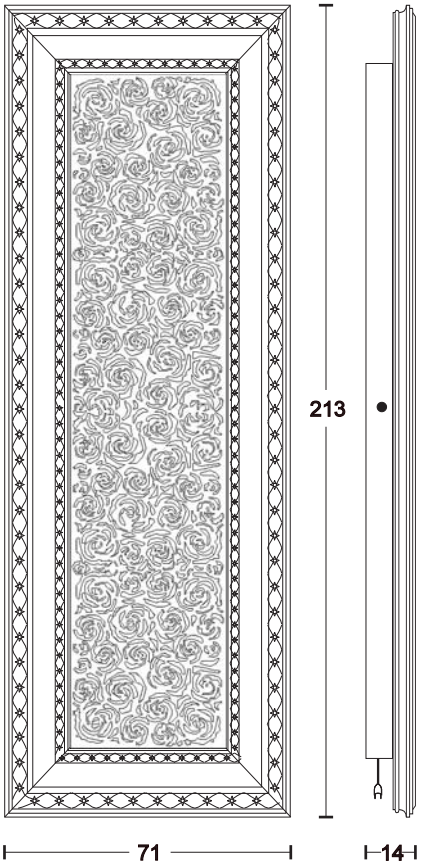

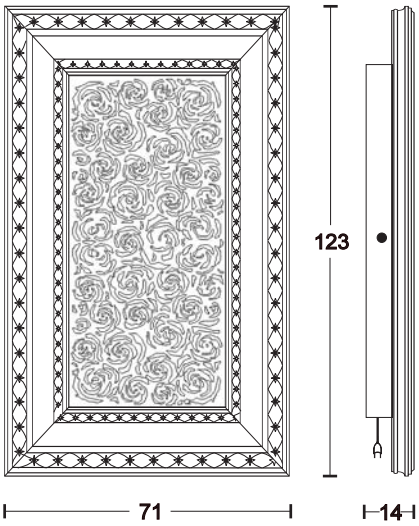

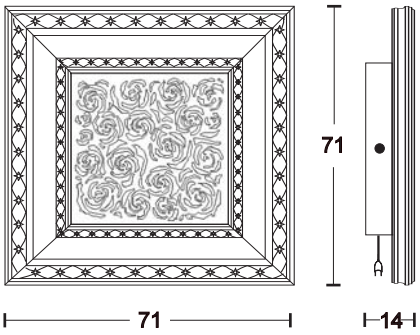

BODY LIGHT 214-CLASSIC

cornice-frame: **€ 4.237,20**
Oro/Argento foglia-Gold/Silver Foil

cornice-frame: **€ 5.398,80**
Bronzo con Oro/Argento Foglia+Crystal Stones
Bronze with Gold/Silver Foil+Cristal Stones

cornice - frame: **€ 4.629,90**
BIANCO LUCIDO decorazioni argento foglia
Gloss white silver foil decorations

cornice - frame: **€ 5.759,60**
NERO LUCIDO decorazioni argento foglia
+Crystal Stones
gloss black+silver foil decorations
+Crystal Stones

cornice - frame **€ 4.326,30**
Argento+patina bianco/Oro+patina avorio
Silver foil+white patina/gold foil+ivory patinal

cornice - frame **€ 4.390,10**
CRACKLE' avorio+decorazioni oro/argento
Ivory cracklè+silver/gold foil decorations

Pannello frontale traforato color Nero o Bianco o Crema o avorio, con tamponatura oro o argento foglia
Frontal board in black or White or Cream or Ivory colour with gold or silver foil shadings

BODY LIGHT 120-CLASSIC

cornice-frame: **€ 2.933,70**
Oro/Argento foglia-Gold/Silver Foil

cornice-frame: **€ 3.752,10**
Bronzo con Oro/Argento Foglia+Crystal Stones
Bronze with Gold/Silver Foil+Cristal Stones

cornice - frame: **€ 3.139,40**
BIANCO LUCIDO decorazioni argento foglia
Gloss white silver foil decorations

cornice - frame: **€ 3.890,70**
NERO LUCIDO decorazioni argento foglia
+Crystal Stones
gloss black+silver foil decorations
+Crystal Stones

cornice - frame **€ 2.985,40**
Argento+patina bianco/Oro+patina avorio
Silver foil+white patina/gold foil+ivory patinal

cornice - frame **€ 3.023,90**
CRACKLE' avorio+decorazioni oro/argento
Ivory cracklè+silver/gold foil decorations

Pannello frontale traforato color Nero o Bianco o Crema o avorio, con tamponatura oro o argento foglia
Frontal board in black or White or Cream or Ivory colour with gold or silver foil shadings

BODY LIGHT 80-CLASSIC

cornice-frame: **€ 1.967,90**
Oro/Argento foglia-Gold/Silver Foil

cornice-frame: **€ 2.302,30**
Bronzo con Oro/Argento Foglia+Crystal Stones
Bronze with Gold/Silver Foil+Cristal Stones

cornice - frame: **€ 1.996,50**
BIANCO LUCIDO decorazioni argento foglia
Gloss white silver foil decorations

cornice - frame: **€ 2.385,90**
NERO LUCIDO decorazioni argento foglia
+Crystal Stones
gloss black+silver foil decorations
+Crystal Stones

cornice - frame **€ 2.017,40**
Argento+patina bianco/Oro+patina avorio
Silver foil+white patina/gold foil+ivory patinal

cornice - frame **€ 2.049,30**
CRACKLE' avorio+decorazioni oro/argento
Ivory cracklè+silver/gold foil decorations

Pannello frontale traforato color Nero o Bianco o Crema o avorio, con tamponatura oro o argento foglia
Frontal board in black or White or Cream or Ivory colour with gold or silver foil shadings

BODY MIRROR - CLASSIC

SPECCHIERA A PARETE
WALL MIRROR

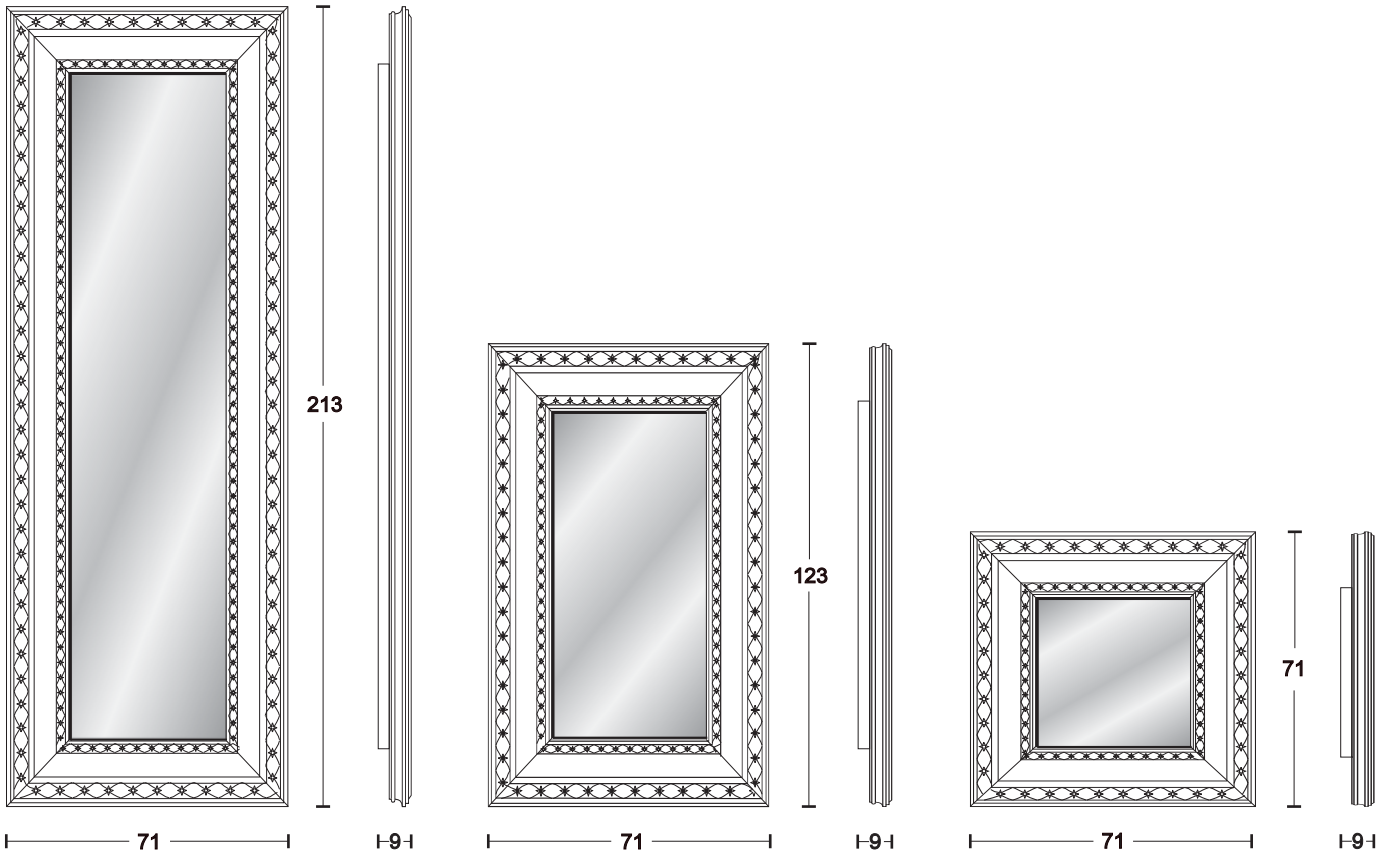

BODY MIRROR 214-CLASSIC

Specchiera a parete
Wall Mirror

cornice-frame: **€ 2.271,50**
nero/bianco opaco-opaque black/white

cornice-frame: **€ 2.651,00**
Oro/Argento foglia-Gold/Silver Foil

cornice-frame: **€ 3.810,40**
Bronzo con Oro/Argento Foglia+Crystal Stones
Bronze with Gold/Silver Foil+Cristal Stones

cornice - frame: **€ 2.916,10**
BIANCO LUCIDO decorazioni argento foglia
Gloss white silver foil decorations

cornice - frame: **€ 4.032,60**
NERO LUCIDO decorazioni argento foglia
+Crystal Stones
gloss black+silver foil decorations
+Crystal Stones

cornice - frame **€ 2.740,10**
Argento+patina bianco/Oro+patina avorio
Silver foil+white patina/gold foil+ivory patinal

cornice - frame **€ 2.802,80**
CRACKLE' avorio+decorazioni oro/argento
Ivory cracklè+silver/gold foil decorations

BODY MIRROR 120-CLASSIC

Specchiera a parete
Wall Mirror

cornice-frame: **€ 1.788,60**
nero/bianco opaco-opaque black/white

cornice-frame: **€ 1.948,10**
Oro/Argento foglia-Gold/Silver Foil

cornice-frame: **€ 2.762,10**
Bronzo con Oro/Argento Foglia+Crystal Stones
Bronze with Gold/Silver Foil+Cristal Stones

cornice - frame: **€ 2.141,70**
BIANCO LUCIDO decorazioni argento foglia
Gloss white silver foil decorations

cornice - frame: **€ 2.901,80**
NERO LUCIDO decorazioni argento foglia
+Crystal Stones
gloss black+silver foil decorations
+Crystal Stones

cornice - frame **€ 1.998,70**
Argento+patina bianco/Oro+patina avorio
Silver foil+white patina/gold foil+ivory patinal

cornice - frame **€ 2.037,20**
CRACKLE' avorio+decorazioni oro/argento
Ivory cracklè+silver/gold foil decorations

BODY MIRROR 80-CLASSIC

Specchiera a parete
Wall Mirror

cornice-frame: **€ 1.392,60**
nero/bianco opaco-opaque black/white

cornice-frame: **€ 1.556,50**
Oro/Argento foglia-Gold/Silver Foil

cornice-frame: **€ 2.008,60**
Bronzo con Oro/Argento Foglia+Crystal Stones
Bronze with Gold/Silver Foil+Cristal Stones

cornice - frame: **€ 1.709,40**
BIANCO LUCIDO decorazioni argento foglia
Gloss white silver foil decorations

cornice - frame: **€ 2.119,70**
NERO LUCIDO decorazioni argento foglia
+Crystal Stones
gloss black+silver foil decorations
+Crystal Stones

cornice - frame **€ 1.607,10**
Argento+patina bianco/Oro+patina avorio
Silver foil+white patina/gold foil+ivory patinal

cornice - frame **€ 1.632,40**
CRACKLE' avorio+decorazioni oro/argento
Ivory cracklè+silver/gold foil decorations

SHINING SUN - CLASSIC

Corpo illuminante a parete - Wall Body light
cornice - frame:

ORO/ARGENTO FOGLIA-gold/silver foil	€ 4.922,50
Bronzo con Oro/Argento Foglia+Crystal Stones Bronze with Gold/Silver Foil+Crystal Stones	€ 5.725,50
Bianco Lucido-Gloss white	€ 5.275,60
Nero Lucido-Gloss Black+Crystal Stones	€ 5.892,70
Argento+patina bianco/oro+patina avorio Silver foil+white patina/gold foil+ivory patina	€ 4.984,10
Cracklè avorio+decor oro/argento Ivory cracklè+silver/gold foil decorations	€ 5.047,90

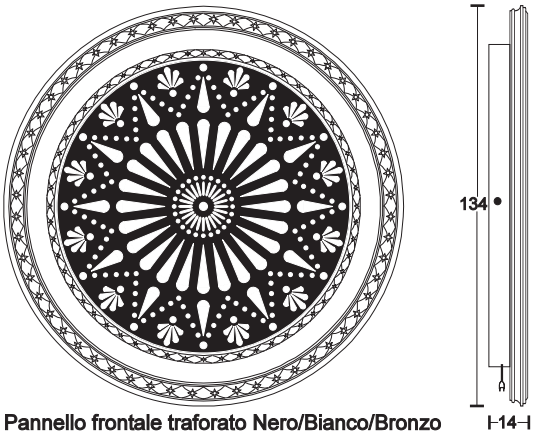

Pannello frontale traforato Nero/Bianco/Bronzo
Completo di interruttore e spina (220 Volts)
Frontal board black/white/Bronze provided with switch and plug (220 volts)

SHINING SUN - CLASSIC - mirror

Specchiera a parete - Wall mirror
cornice - frame:

ORO/ARGENTO FOGLIA-gold/silver foil	€ 3.320,90
Bronzo con Oro/Argento Foglia+Crystal Stones Bronze with Gold/Silver Foil+Crystal Stones	€ 4.158,00
Bianco Lucido-Gloss white	€ 3.668,50
Nero Lucido-Gloss Black+Crystal Stones	€ 4.325,20
Argento+patina bianco/oro+patina avorio Silver foil+white patina/gold foil+ivory patina	€ 3.383,60
Cracklè avorio+decor oro/argento Ivory cracklè+silver/gold foil decorations	€ 3.447,40

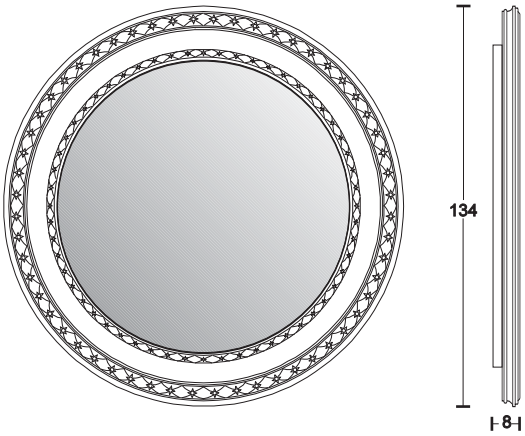

SITTING CASE - CLASSIC

Cassapanca - Sitting case

Struttura-Structure: oro/argento foglia/bronzo-gold/silver foil/bronze. Pannelli traforati-Frontal panels: Nero/bronzo+oro/argento-Black/bronze+gold/silver Piano chiusura-opening top:Metaltitanio/bronzo+oro/argento-Metaltitanio/bronze+gold/silver completo di ammortizzatori-with shock absorber	€ 5.883,90
Struttura-Structure: Bianco/Nero Lucido-gloss White Pannelli traforati-Frontal panel: Bianco/Nero-white/black Piano chiusura-opening top:Bianco/nero+argento-white/black+silver Completo di ammortizzatori-with Shock absorber	€ 6.305,20
Struttura-Structure:oro/argento+patina avorio/bianco-gold/silver foil+ivory/white patina. Pannelli traforati-Frontal panels: avorio/bianco-Ivory/white Piano chiusura-opening top:Avorio/bianco+decorio oro/argento-Ivory/white+gold/silver foil decoration completo di ammortizzatori-with shock absorber	€ 5.945,50
Struttura-Structure: Cracklè avorio+decorazioni oro/argento Ivory cracklè+gold/silver deocration Pannelli traforati-Frontal panels: avorio-Ivory Piano chiusura-opening top:Cracklè avorio+decorazioni oro/argento- Ivory cracklè+gold/silver foil decoration/completo di ammortizzatori-with shock absorber	€ 6.034,60

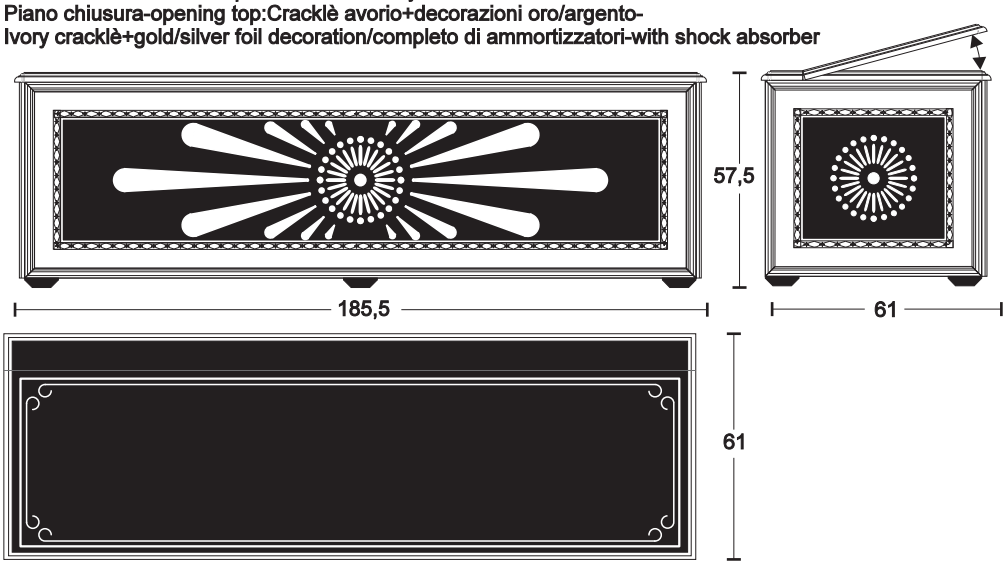

TRAYS

OPTIONAL:
Coppia vassoi scorrevoli - METALTITANIO
Couple of sliding trays - METALTITANIO

€ 663,30

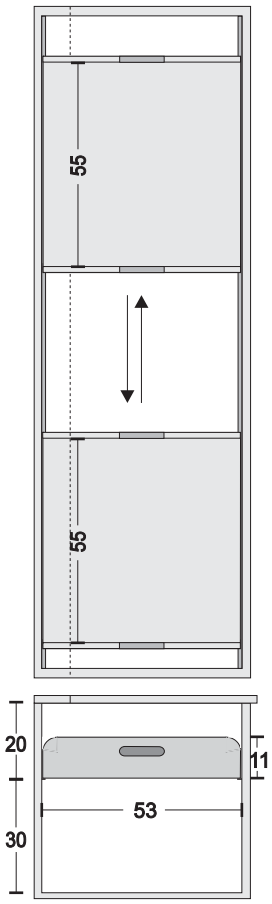

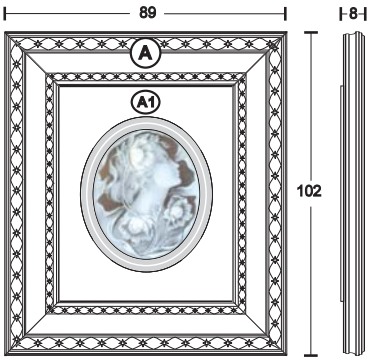

CAMMEO

Ovale con Cammeo (Sinistro o destro)
Oval with Cameo (Left or Right)

(A) Oro/Argento Foglia/bronzo(Gold/Silver/bronze foil) (A1) tutti i laccati opachi(all opaque laquering)	€ 2.046,00
(A) Nero/Bianco Lucido+Decori Oro/ argento(Gloss Black/White+Gold/Silver Foil Decorations) (A1) tutti i laccati opachi(all opaque laquering)	€ 2.244,00
(A) Bronzo+Decori oro/argento+Crystal Stones(Bronze+Gold/Silver Foil Decorations+Crystal Stones) (A1) tutti i laccati opachi(all opaque laquering)	€ 2.709,30
(A) Cracklè avorio+decori oro/argento(Ivory cracklè+gold/silver foil decoration) (A1) avorio(ivory)	€ 2.147,20

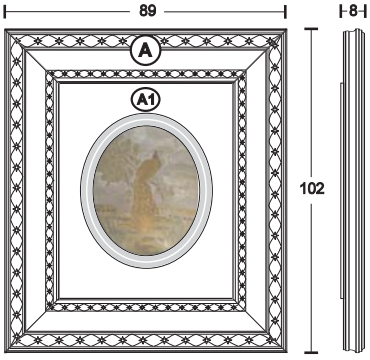

PAVONE

Ovale con Pavone Art oro 12>23 Carati(Sinistro o destro)
Oval with Art peacock Gold 12>23 carats (Left/Right)

(A) Oro/Argento Foglia/bronzo(Gold/Silver/bronze foil) (A1) tutti i laccati opachi(all opaque laquering)	€ 3.960,00
(A) Nero/Bianco Lucido+Decori Oro/ argento(Gloss Black/White+Gold/Silver Foil Decorations) (A1) tutti i laccati opachi(all opaque laquering)	€ 4.161,30
(A) Bronzo+Decori oro/argento+Crystal Stones(Bronze+Gold/Silver Foil Decorations+Crystal Stones) (A1) tutti i laccati opachi(all opaque laquering)	€ 4.629,90
(A) Cracklè avorio+decori oro/argento(Ivory cracklè+gold/silver foil decoration) (A1) avorio(ivory)	€ 4.060,10

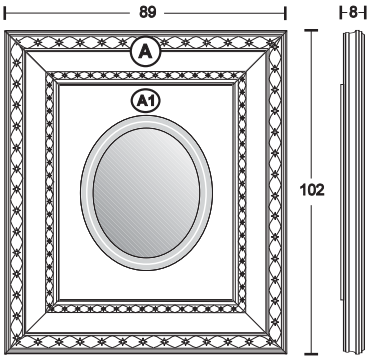

OVAL MIRROR

Ovale con specchio bisellato
Oval with bevelled mirror

(A) Oro/Argento Foglia/bronzo(Gold/Silver/bronze foil) (A1) tutti i laccati opachi(all opaque laquering)	€ 1.952,50
(A) Nero/Bianco Lucido+Decori Oro/ argento(Gloss Black/White+Gold/Silver Foil Decorations) (A1) tutti i laccati opachi(all opaque laquering)	€ 2.151,60
(A) Bronzo+Decori oro/argento+Crystal Stones(Bronze+Gold/Silver Foil Decorations+Crystal Stones) (A1) tutti i laccati opachi(all opaque laquering)	€ 2.615,80
(A) Cracklè avorio+decori oro/argento(Ivory cracklè+gold/silver foil decoration) (A1) avorio(ivory)	€ 2.052,60

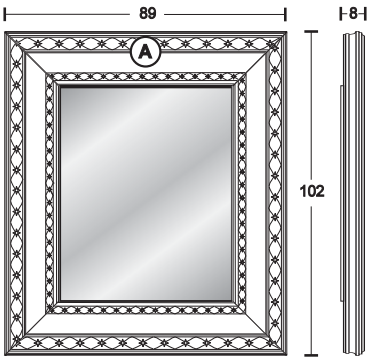

MIRROR

Specchio anticato o normale
Antique mirror or standard

(A) Oro/Argento Foglia/bronzo(Gold/Silver/bronze foil)	€ 2.005,30
(A) Nero/Bianco Lucido+Decori Oro/ argento (Gloss Black/White+Gold/Silver Foil Decorations)	€ 2.205,50
(A) Bronzo+Decori oro/argento+Crystal Stones (Bronze+Gold/Silver Foil Decorations+Crystal Stones)	€ 2.669,70
(A) Cracklè avorio+decori oro/argento(Ivory cracklè+gold/silver foil decoration)	€ 2.106,50

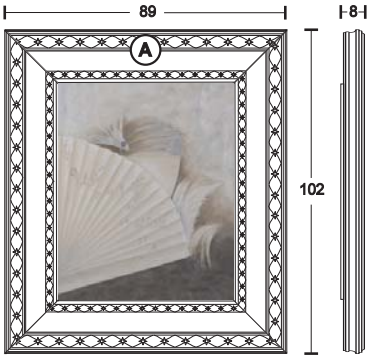

THE FAN

Dipinto materico "Donna con Ventaglio" (Sinistro o destro)
Hand-made Materic painting "Donna con Ventaglio" (Left or Right)

(A) Oro/Argento Foglia/bronzo(Gold/Silver/bronze foil)	€ 2.152,70
(A) Nero/Bianco Lucido+Decori Oro/ argento (Gloss Black/White+Gold/Silver Foil Decorations)	€ 2.351,80
(A) Bronzo+Decori oro/argento+Crystal Stones (Bronze+Gold/Silver Foil Decorations+Crystal Stones)	€ 2.817,10
(A) Cracklè avorio+decori oro/argento(Ivory cracklè+gold/silver foil decoration)	€ 2.253,90

CIAIKA -170 CLASSIC

Tavolino porta CD/DVD per 800 Cd (e/o 378 DVD)
Coffee table CD/DVD rack for 800 CD (and or 378 DVD

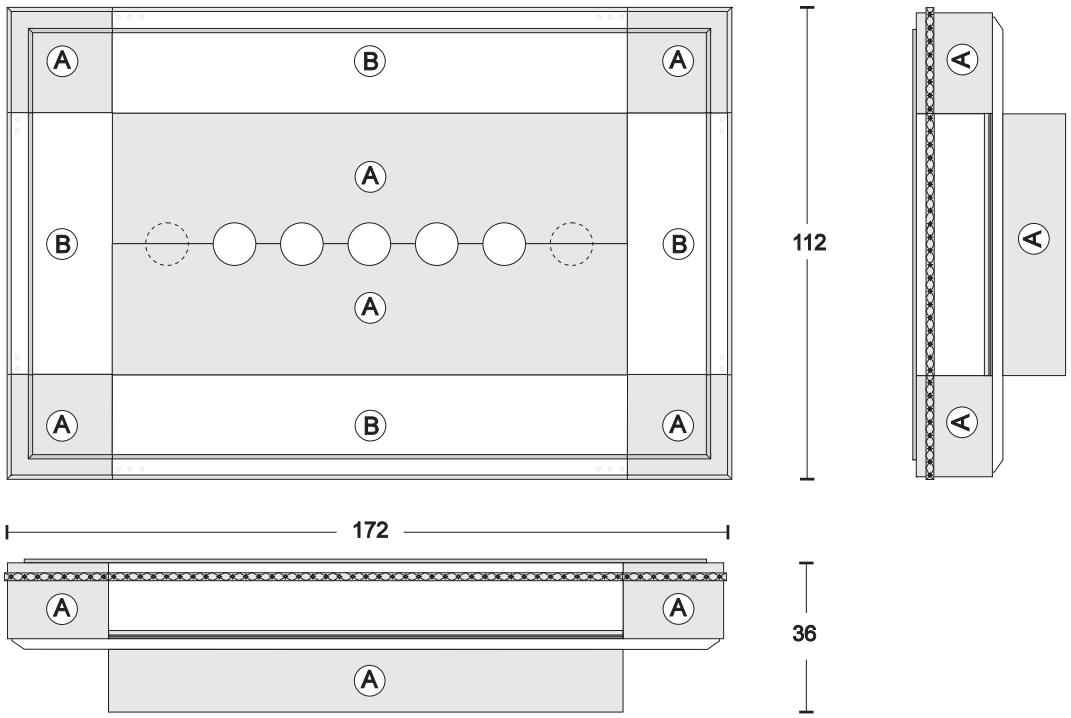

Finiture esterne standard
Outside Standard finishings

A	ORO/ARGENTO FOGLIA (gold/silver foil)	B METALTITANIO + (oro foglia-gold foil)	€ 6.391,00
A	ORO/ARGENTO FOGLIA (gold/silver foil)	B COLORE BRONZO (bronze colour) (con-with CRYSTAL STONES)	€ 6.813,40
A	ARGENTO FOGLIA (silver foil)	B Nero Lucido (gloss black) (con-with CRYSTAL STONES)	€ 6.916,80
A	ARGENTO FOGLIA (silver foil)	B Bianco Lucido (gloss White)	€ 6.840,90
A	ARGENTO FOGLIA+patina bianca (silver foil+white patina)	B BIANCO (white)	€ 6.453,70
A	ORO FOGLIA+patina avorio (gold foil+ivory patina)	B AVORIO (ivory)	€ 6.453,70
A	AVORIO (ivory)	B CRACKLE' avorio+decorazioni oro/argento (ivori cracklè+gold/silver foil decoration)	€ 6.517,50

Finitura superfici interne: METALSILVER o METALGOLD
Finishings of inside surface: METALSILVER or METALGOLD

CIAIKA -110 CLASSIC

Tavolino porta CD/DVD per 490 Cd (e/o 218 DVD)
Coffe table CD/DVD rack for 490 CD (and or 218 DVD)

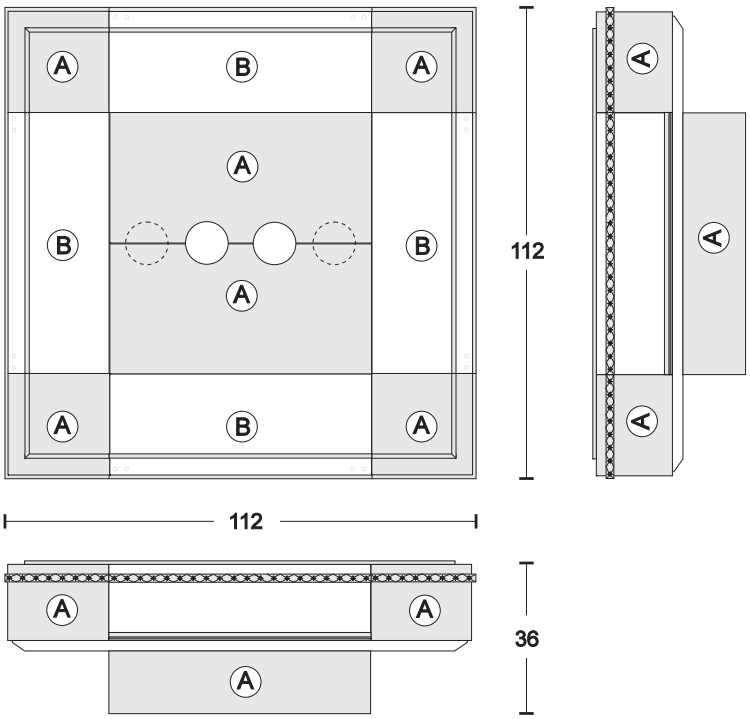

Finiture esterne standard
Outside Standard finishings

(A) ORO/ARG FOGLIA (gold/silver foil)	(B) METALTITANIO + (oro foglia-gold foil)	€ 5.167,80
(A) ORO/ARG FOGLIA (gold/silver foil)	(B) COLORE BRONZO (bronze colour) (con-with CRYSTAL STONES)	€ 5.498,90
(A) ARGENTO FOGLIA (silver foil)	(B) Nero/bianco Lucido (gloss black/white) (con-with CRYSTAL STONES)	€ 6.163,30
(A) ARGENTO FOGLIA (silver foil)	(B) Bianco/nero Lucido (gloss White/black)	€ 5.832,20
(A) ARGENTO patina bianca (silver foil+white patina)	(B) BIANCO (white)	€ 5.230,50
(A) ORO+patina avorio (gold foil+ivory patina)	(B) AVORIO (ivory)	€ 5.230,50
(A) AVORIO (ivory)	(B) CRACKLE' avorio decorazioni oro/argento (ivory cracklè gold/silver foil decoration)	€ 5.274,50

Finitura superfici interne: METALSILVER o METALGOLD
Finishings of inside surface: METALSILVER or METALGOLD

CIAIKA - 110 SLIM - CLASSIC

Tavolino porta CD/DVD per 180 Cd (e/o 92 DVD)
Coffe table CD/DVD rack for 180 CD (and or 92 DVD)

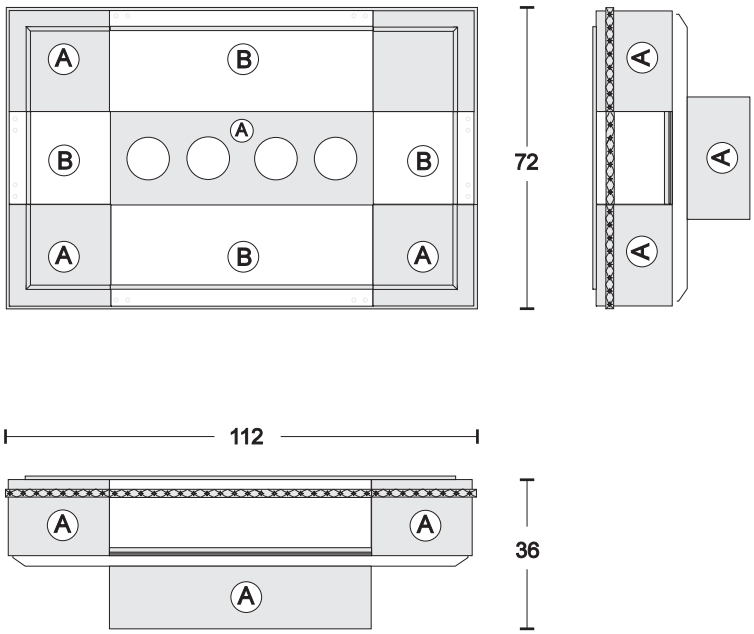

Finiture esterne standard
Outside Standard finishings

(A) ORO/ARG FOGLIA (gold/silver foil)	(B) METALTITANIO + (oro foglia-gold foil)	€ 4.415,40
(A) ORO/ARG FOGLIA (gold/silver foil)	(B) COLORE BRONZO (bronze colour) (con-with CRYSTAL STONES)	€ 4.967,60
(A) ARGENTO FOGLIA (silver foil)	(B) Nero/bianco Lucido (gloss black/white) (con-with CRYSTAL STONES)	€ 5.632,00
(A) ARGENTO FOGLIA (silver foil)	(B) Bianco/nero Lucido (gloss White/black)	€ 5.299,80
(A) ARGENTO patina bianca (silver foil+white patina)	(B) BIANCO (white)	€ 4.466,00
(A) ORO+patina avorio (gold foil+ivory patina)	(B) AVORIO (ivory)	€ 4.466,00
(A) AVORIO (ivory)	(B) CRACKLE' avorio decorazioni oro/argento (ivory cracklè gold/silver foil decoration)	€ 4.515,50

Finitura superfici interne: METALSILVER o METALGOLD
Finishings of inside surface: METALSILVER or METALGOLD

1 WINDOWS - COFFEE TABLE - CLASSIC

Tavolino contenitore con vassoi estraibili - Coffee table container removable tray

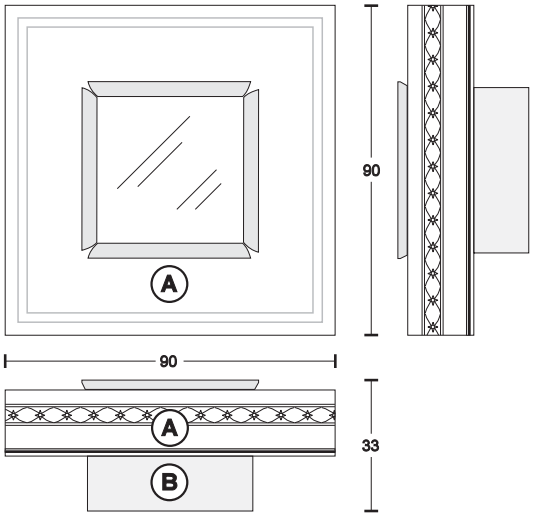

(A) tutti i laccati opachi, decori oro/argento foglia **€ 2.772,00**
vassoi in vetro temperato, maniglie oro/argento foglia
All opaque laquering, decoration gold/silver foil
Ardened Glass Trays,handles gold/silver foil
(B) tutti i laccati opachi-All opaque laquering

(A) Bronzo+crystal stones, decori oro/argento foglia **€ 3.426,50**
vassoi in vetro temperato, maniglie decori oro/argento foglia
Bronze+crystal stones, decoration gold/silver foil
Ardened Glass Trays,handles Gold/Silverfoil
(B) tutti i laccati opachi-All opaque laquering

(A) Cracklè avorio+decorazioni oro/argento foglia **€ 2.833,60**
vassoio in vetro temperato, maniglie oro/argento
Ivory cracklè+gold/silver foil decoration
Ardened grass trays+gold/silver foil handles
(B) Avorio-Ivory

(A) Oro/argento foglia+patina avorio/bianco **€ 2.801,70**
decori oro/argento foglia-vassoi in vetro temperato,
maniglie decori oro/argento foglia
Gold/silver+Ivory/white patina
decoration gold/silver foil - Ardened Glass Trays
handles Gold/Silverfoil
(B) Avorio/bianco-Ivory/white

2 WINDOWS - COFFEE TABLE - CLASSIC

Tavolino contenitore con vassoi estraibili - Coffee table container removable tray

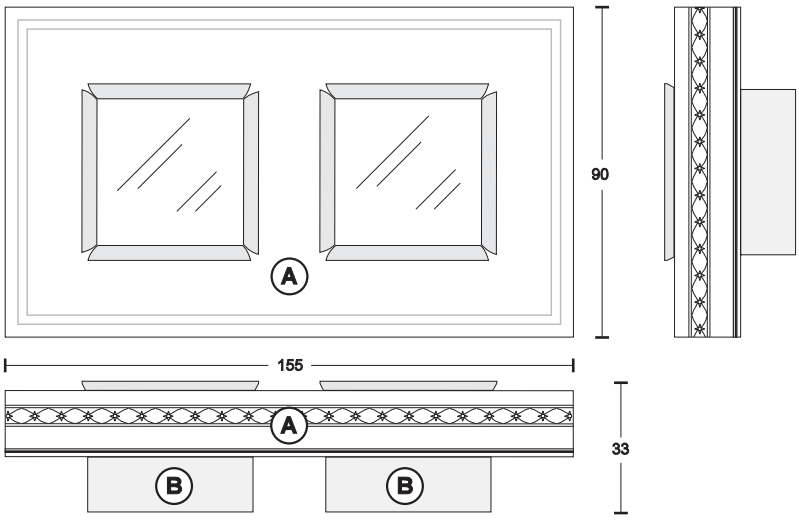

(A) Tutti laccati opachi - decori oro/argento foglia - vassoi in vetro temperato - maniglie oro/argento foglia **€ 4.438,50**
All opaque laquering - decoration gold/silver foil - Ardened Glass Trays - handles gold/silver foil
(B) tutti i laccati opachi-All opaque laquering

(A) Bronzo+crystal stones - decori oro/argento foglia - vassoi in vetro temperato - maniglie oro/argento foglia **€ 5.313,00**
Bronze+crystal stones - decoration gold/silver foil - Ardened Glass Trays - handles gold/silver foil
(B) tutti i laccati opachi-All opaque laquering

(A) Cracklè avorio+decorazioni oro/argento foglia-vassoio in vetro temperato, maniglie oro/argento **€ 4.567,20**
Ivory cracklè+gold/silver foil decoration-Ardened grass trays+gold/silver foil handles
(B) Avorio-Ivory

(A) Oro/argento foglia+patina avorio/bianco-decori oro/argento foglia-vassoi in vetro temperato,maniglie decori oro/argento foglia **€ 4.503,40**
Gold/silver+Ivory/white patina-decoration gold/silver foil - Ardened Glass Trays-handles Gold/Silverfoil
(B) Avorio/bianco-Ivory/white

4 WINDOWS - COFFEE TABLE - CLASSIC

Tavolino contenitore con vassoi estraibili - Coffee table container removable tray

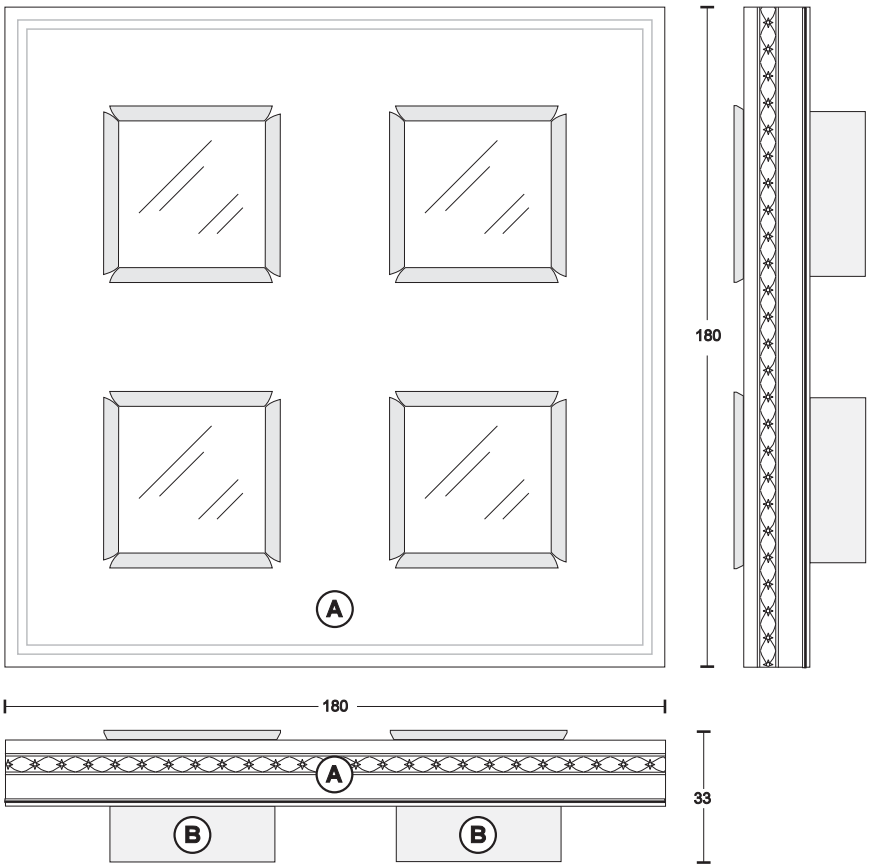

(A) tutti i laccati opachi,
decori oro/argento foglia-vassoi in vetro temperato,
maniglie oro/argento foglia
All opaque laquering,
decoration gold/silver foil - Ardened Glass Trays
handles gold/silver foil

(B) tutti i laccati opachi-All opaque laquering

€ 7.909,00

(A) Bronzo+crystal stones
decori oro/argento foglia-vassoi in vetro temperato,
maniglie decori oro/argento foglia
Bronze+crystal stones
decoration gold/silver foil - Ardened Glass Trays
handles Gold/Silverfoil

(B) tutti i laccati opachi-All opaque laquering

€ 9.273,00

(A) Cracklè avorio+decorazioni oro/argento foglia
vassoio in vetro temperato, maniglie oro/argento
Ivory cracklè+gold/silver foil decoration
Ardened grass trays+gold/silver foil handles

(B) Avorio-Ivory

€ 8.159,80

(A) Oro/argento foglia+patina avorio/bianco
decori oro/argento foglia-vassoi in vetro temperato,
maniglie decori oro/argento foglia
Gold/silver+Ivory/white patina
decoration gold/silver foil - Ardened Glass Trays
handles Gold/Silverfoil

(B) Avorio/bianco-Ivory/white

€ 8.033,30

3 WINDOWS - COFFEE TABLE - CLASSIC

Tavolino contenitore con vassoi estraibili - Coffee table container removable tray

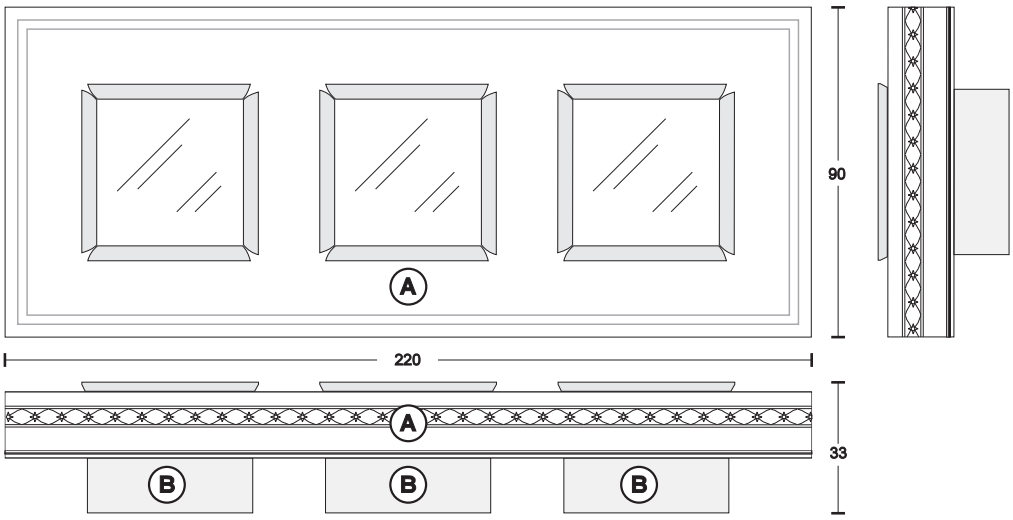

(A) Tutti laccati opachi - decori oro/argento foglia - vassoi in vetro temperato - maniglie oro/argento foglia — € 6.264,50
All opaque laquering - decoration gold/silver foil - Ardened Glass Trays - handles gold/silver foil
(B) tutti i laccati opachi-All opaque laquering

(A) Bronzo+crystal stones - decori oro/argento foglia - vassoi in vetro temperato - maniglie oro/argento foglia — € 7.362,30
Bronze+crystal stones - decoration gold/silver foil - Ardened Glass Trays - handles gold/silver foil
(B) tutti i laccati opachi-All opaque laquering

(A) Cracklè avorio+decorazioni oro/argento foglia-vassoio in vetro temperato, maniglie oro/argento — € 6.439,40
Ivory cracklè+gold/silver foil decoration-Ardened grass trays+gold/silver foil handles
(B) Avorio-Ivory

(A) Oro/argento foglia+patina avorio/bianco-decori oro/argento foglia-vassoi in vetro temperato,maniglie decori oro/argento foglia — € 6.356,90
Gold/silver+Ivory/white patina-decoration gold/silver foil - Ardened Glass Trays-handles Gold/Silverfoil
(B) Avorio/bianco-Ivory/white

FLOWER 60 - CLASSIC

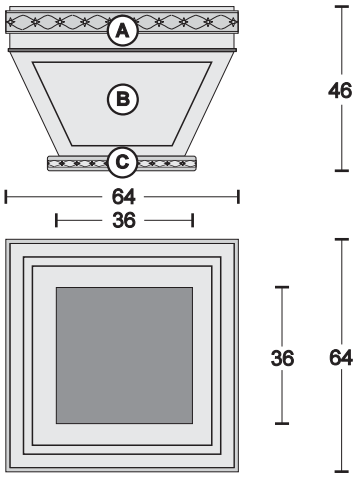

Finiture - finishings

(A) oro/argento foglia(gold/silver foil) decorazioni-decorations:Nero(Black)-Crema (Cream)-Bianco(white)	€ 2.038,30
(A)+(C) Metalblack-Crema(Cream)-Bianco(white) decorazioni-decorations:oro/argento foglia(gold/silver foil)	
(A)+(B)+(C) Bronzo+Crystal Stones(bronze+crystal stones decorazioni-decorations:oro/argento foglia(gold/silver foil)	€ 2.273,70
(A)+(C) Nero Lucido+Crystal Stones(gloss black+crystal stones)	€ 2.359,50
(B) Nero-Black-Schwarze. decorazioni-decorations:oro/argento foglia(gold/silver foil)	
(A) Cracklè avorio+decorazioni oro/argento foglia (Ivory cracklè+gold/silver foil decorations) (B) Avorio+decorazioni oro/argento foglia (Ivory+gold/silver foil decorations) (C) Cracklè avorio+decorazioni oro/argento foglia (Ivory cracklè+gold/silver foil decorations)	€ 2.082,30

Completo di vasca metallica zincata-including galvanized metal tank

VASE 90 - CLASSIC

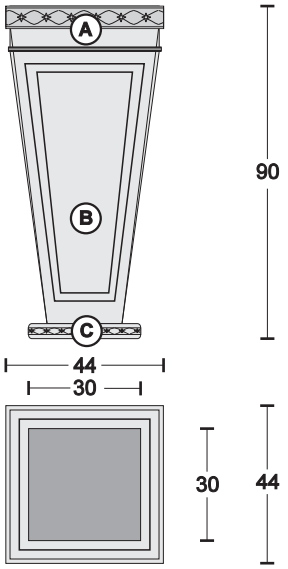

Finiture - finishings

(A) oro/argento foglia(gold/silver foil) decorazioni-decorations:Nero(Black)-Crema (Cream)-Bianco(white)	€ 1.897,50
(A)+(C) Metalblack-Crema(Cream)-Bianco(white) decorazioni-decorations:oro/argento foglia(gold/silver foil)	
(A)+(B)+(C) Bronzo+Crystal Stones(bronze+crystal stones decorazioni-decorations:oro/argento foglia(gold/silver foil)	€ 2.081,20
(A)+(C) Nero Lucido+Crystal Stones(gloss black+crystal stones)	€ 2.175,80
(B) Nero-Black-Schwarze. decorazioni-decorations:oro/argento foglia(gold/silver foil)	
(A) Cracklè avorio+decorazioni oro/argento foglia (Ivory cracklè+gold/silver foil decorations) (B) Avorio+decorazioni oro/argento foglia (Ivory+gold/silver foil decorations) (C) Cracklè avorio+decorazioni oro/argento foglia (Ivory cracklè+gold/silver foil decorations)	€ 1.941,50

Completo di vasca metallica zincata oppure chiusura top per colonna
including galvanized metal tank or top as column

VASE 125 - CLASSIC

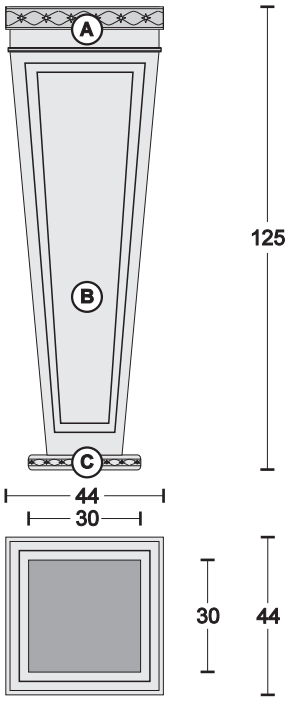

Finiture - finishings

(A) oro/argento foglia(gold/silver foil) decorazioni-decorations:Nero(Black)-Crema (Cream)-Bianco(white)	€ 2.024,00
(A)+(C) Metalblack-Crema(Cream)-Bianco(white) decorazioni-decorations:oro/argento foglia(gold/silver foil)	
(A)+(B)+(C) Bronzo+Crystal Stones(bronze+crystal stones decorazioni-decorations:oro/argento foglia(gold/silver foil)	€ 2.218,70
(A)+(C) Nero Lucido+Crystal Stones(gloss black+crystal stones)	€ 2.359,50
(B) Nero-Black-Schwarze. decorazioni-decorations:oro/argento foglia(gold/silver foil)	
(A) Cracklè avorio+decorazioni oro/argento foglia (Ivory cracklè+gold/silver foil decorations) (B) Avorio+decorazioni oro/argento foglia (Ivory+gold/silver foil decorations) (C) Cracklè avorio+decorazioni oro/argento foglia (Ivory cracklè+gold/silver foil decorations)	€ 2.068,00

Completo di vasca metallica zincata oppure chiusura top per colonna
including galvanized metal tank or top as column

FLOWER 60 - BRAZIER - CLASSIC

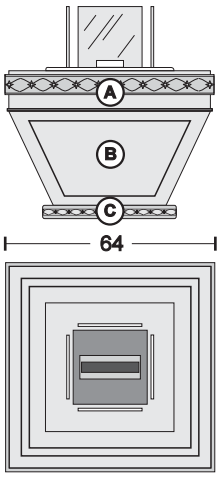

Finiture - finishings

(A) oro/argento foglia(gold/silver foil) decorazioni-decorations:Nero(Black)-Crema (Cream)-Bianco(white)	€ 3.584,90
(A)+(C) Metalblack-Crema(Cream)-Bianco(white) decorazioni-decorations:oro/argento foglia(gold/silver foil)	
(A)+(B)+(C) Bronzo+Crystal Stones(bronze+crystal stones decorazioni-decorations:oro/argento foglia(gold/silver foil)	€ 3.810,40
(A)+(C) Nero Lucido+Crystal Stones(gloss black+crystal stones)	€ 3.890,70
(B) Nero-Black-Schwarze. decorazioni-decorations:oro/argento foglia(gold/silver foil)	
(A) Cracklè avorio+decorazioni oro/argento foglia (Ivory cracklè+gold/silver foil decorations) (B) Avorio+decorazioni oro/argento foglia (Ivory+gold/silver foil decorations) (C) Cracklè avorio+decorazioni oro/argento foglia (Ivory cracklè+gold/silver foil decorations)	€ 3.628,90

Con braciere a bio-alcol removibile e vetri temperati-Complete of bio-alcohol bazier and tempered glass

VASE 90 - BRAZIER - CLASSIC

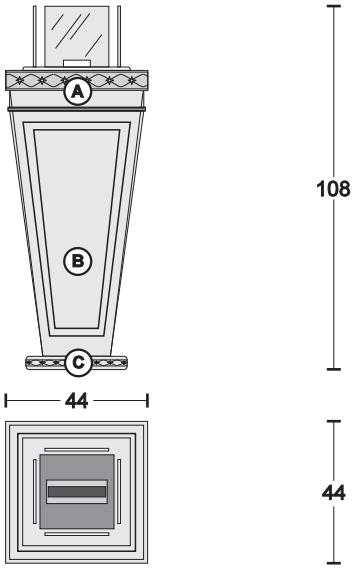

Finiture - finishings

(A) oro/argento foglia(gold/silver foil) decorazioni-decorations:Nero(Black)-Crema (Cream)-Bianco(white)	€ 3.450,70
(A)+(C) Metalblack-Crema(Cream)-Bianco(white) decorazioni-decorations:oro/argento foglia(gold/silver foil)	
(A)+(B)+(C) Bronzo+Crystal Stones(bronze+crystal stones decorazioni-decorations:oro/argento foglia(gold/silver foil)	€ 3.624,50
(A)+(C) Nero Lucido+Crystal Stones(gloss black+crystal stones)	€ 3.716,90
(B) Nero-Black-Schwarze. decorazioni-decorations:oro/argento foglia(gold/silver foil)	
(A) Cracklè avorio+decorazioni oro/argento foglia (Ivory cracklè+gold/silver foil decorations) (B) Avorio+decorazioni oro/argento foglia (Ivory+gold/silver foil decorations) (C) Cracklè avorio+decorazioni oro/argento foglia (Ivory cracklè+gold/silver foil decorations)	€ 3.494,70

Con braciere a bio-alcol removibile e vetri temperati-Complete of bio-alcohol bazier and tempered glass

VASE 125 - BRAZIER - CLASSIC

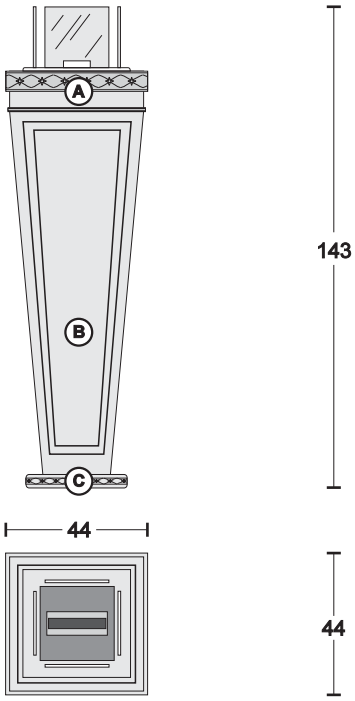

Finiture - finishings

(A) oro/argento foglia(gold/silver foil) decorazioni-decorations:Nero(Black)-Crema (Cream)-Bianco(white)	€ 3.572,80
(A)+(C) Metalblack-Crema(Cream)-Bianco(white) decorazioni-decorations:oro/argento foglia(gold/silver foil)	
(A)+(B)+(C) Bronzo+Crystal Stones(bronze+crystal stones decorazioni-decorations:oro/argento foglia(gold/silver foil)	€ 3.756,50
(A)+(C) Nero Lucido+Crystal Stones(gloss black+crystal stones)	€ 3.890,70
(B) Nero-Black-Schwarze. decorazioni-decorations:oro/argento foglia(gold/silver foil)	
(A) Cracklè avorio+decorazioni oro/argento foglia (Ivory cracklè+gold/silver foil decorations) (B) Avorio+decorazioni oro/argento foglia (Ivory+gold/silver foil decorations) (C) Cracklè avorio+decorazioni oro/argento foglia (Ivory cracklè+gold/silver foil decorations)	€ 3.616,80

Con braciere a bio-alcol removibile e vetri temperati-Complete of bio-alcohol bazier and tempered glass

CHEST-NOUVEAU-282 CLASSIC DIVANO - SOFA

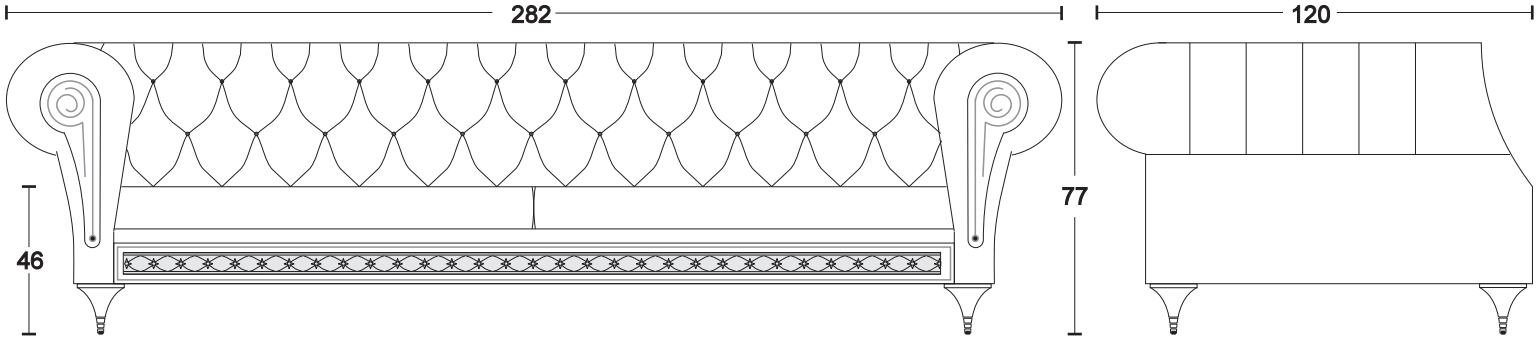

Pelle-Leather cat."SOFT"	Pelle-Leather cat."EXTRA"	Pelle-Leather cat."GLAM"
€ 13.805,00	€ 15.026,00	€ 16.522,00
Crystal stones € 14.179,00	Crystal stones € 15.411,00	Crystal stones € 16.901,50
Eco Nabuk Eco Nubuk	Velluto Velvet	
€ 11.777,70	€ 13.213,20	
Crystal stones € 12.157,20	Crystal stones € 13.592,70	

CHEST-NOUVEAU-209 CLASSIC DIVANO - SOFA

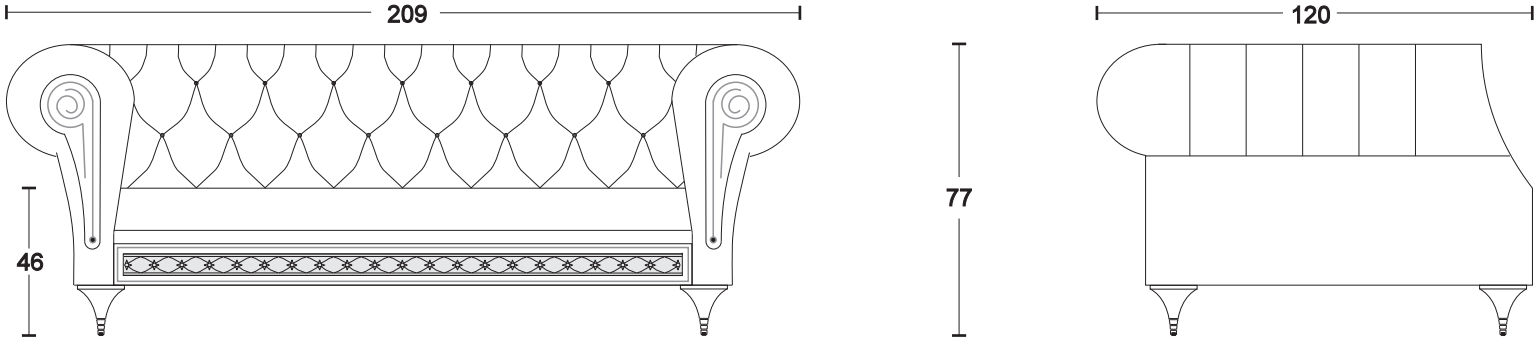

Pelle-Leather cat."SOFT"	Pelle-Leather cat."EXTRA"	Pelle-Leather cat."GLAM"
€ 10.967,00	€ 12.056,00	€ 13.167,00
Crystal stones € 11.220,00	Crystal stones € 12.309,00	Crystal stones € 13.420,00
Eco Nabuk Eco Nubuk	Velluto Velvet	
€ 9.588,70	€ 10.641,40	
Crystal stones € 9.841,70	Crystal stones € 10.894,40	

CHEST-NOUVEAU-123 CLASSIC POLTRONA - ARMCHAIR

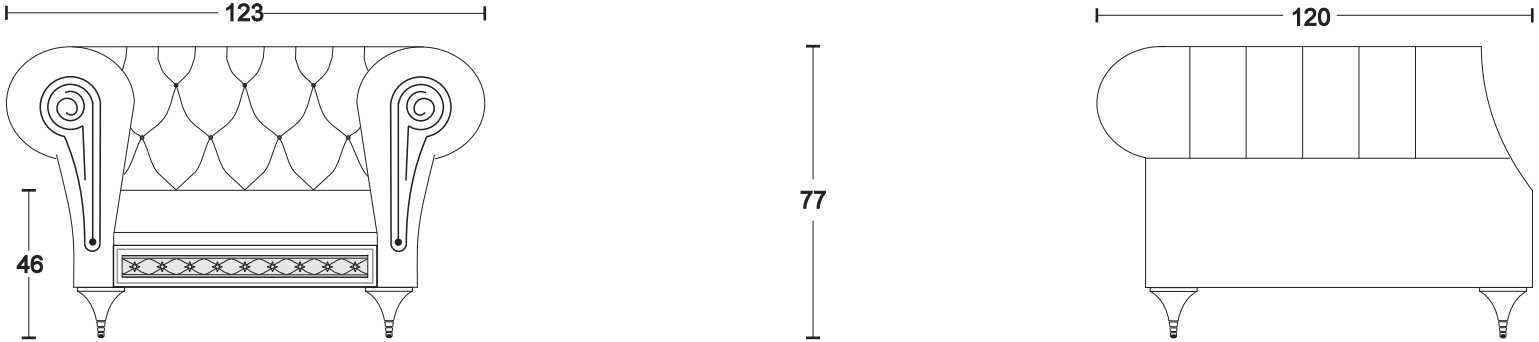

Pelle-Leather cat."SOFT"	Pelle-Leather cat."EXTRA"	Pelle-Leather cat."GLAM"
€ 9.289,50	€ 10.131,00	€ 11.044,00
Crystal stones € 9.416,00	Crystal stones € 10.257,50	Crystal stones € 11.170,50
Eco Nabuk Eco Nubuk	Velluto Velvet	
€ 7.476,70	€ 8.394,10	
Crystal stones € 7.603,20	Crystal stones € 8.520,60	

CHEST NOUVEAU - CLASSIC

CHAISE LOUNGE - DX

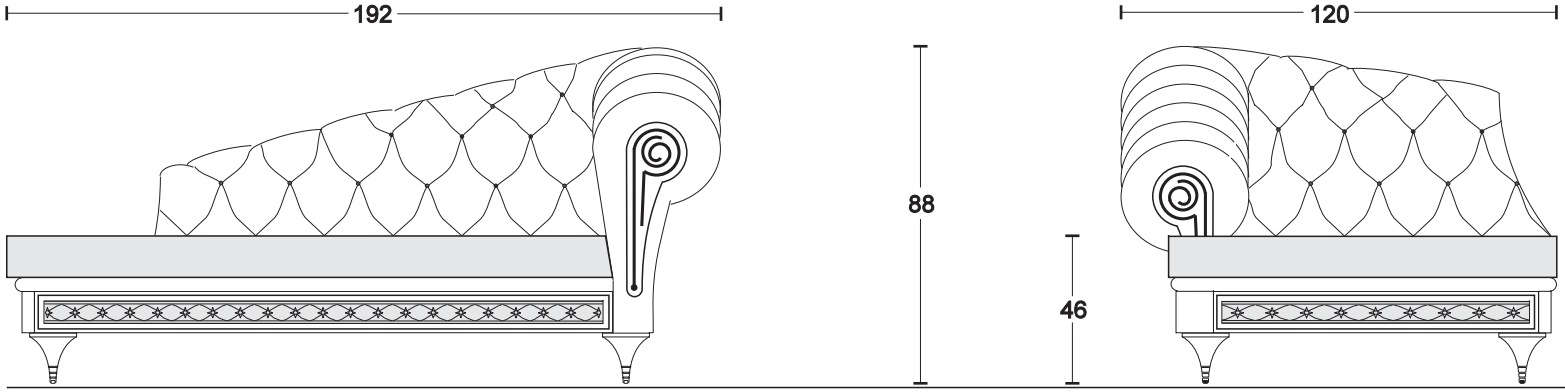

Pelle-Leather cat."SOFT"	Pelle-Leather cat."EXTRA"	Pelle-Leather cat."GLAM"
€ 10.950,50	€ 12.028,50	€ 13.128,50
Crystal stones € 11.330,00	Crystal stones € 12.408,00	Crystal stones € 13.508,00
Eco Nabuk Eco Nubuk	Velluto Velvet	
€ 8.760,40	€ 9.862,60	
Crystal stones € 9.456,70	Crystal stones € 10.557,80	

CHEST NOUVEAU - CLASSIC

CHAISE LOUNGE - SX

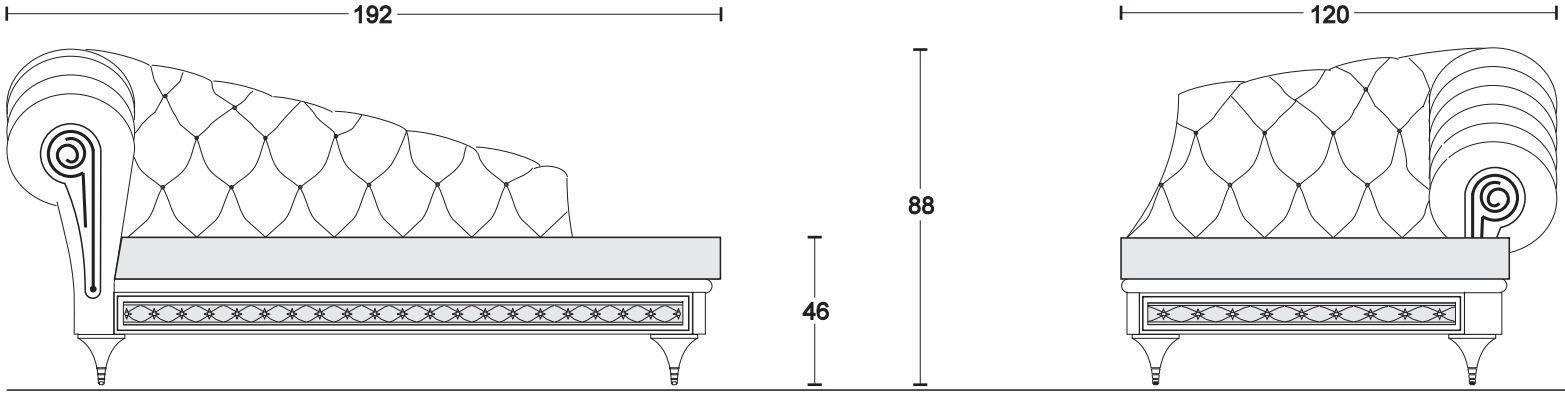

Pelle-Leather cat."SOFT"	Pelle-Leather cat."EXTRA"	Pelle-Leather cat."GLAM"
€ 10.950,50	€ 12.028,50	€ 13.128,50
Crystal stones € 11.330,00	Crystal stones € 12.408,00	Crystal stones € 13.508,00
Eco Nabuk Eco Nubuk	Velluto Velvet	
€ 8.760,40	€ 9.862,60	
Crystal stones € 9.456,70	Crystal stones € 10.557,80	

CHEST NOUVEAU

Pelle Leather cat.SOFT	Pelle Leather cat.EXTRA	Pelle Leather cat.GLAM	Eco Nabuk Eco Nubuk	Velluto Velvet
€ 495,00	€ 583,00	€ 676,50	€ 284,90	€ 367,40

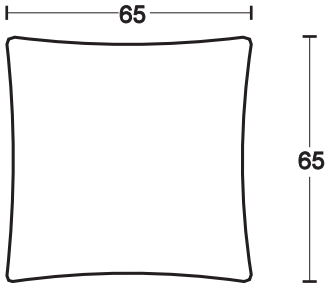

EXTRA CUSCINO - EXTRA CUSCION 65-55-45

Pelle Leather cat.SOFT	Pelle Leather cat.EXTRA	Pelle Leather cat.GLAM	Eco Nabuk Eco Nubuk	Velluto Velvet
€ 456,50	€ 533,50	€ 632,50	€ 266,20	€ 335,50

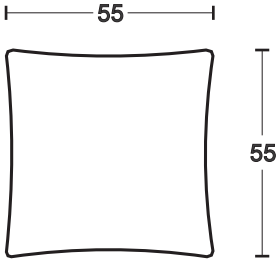

Pelle Leather cat.SOFT	Pelle Leather cat.EXTRA	Pelle Leather cat.GLAM	Eco Nabuk Eco Nubuk	Velluto Velvet
€ 412,50	€ 484,00	€ 561,00	€ 242,00	€ 303,60

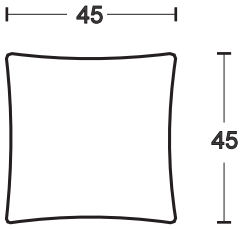

CONFORT-NOUVEAU-264 CLASSIC DIVANO - SOFA

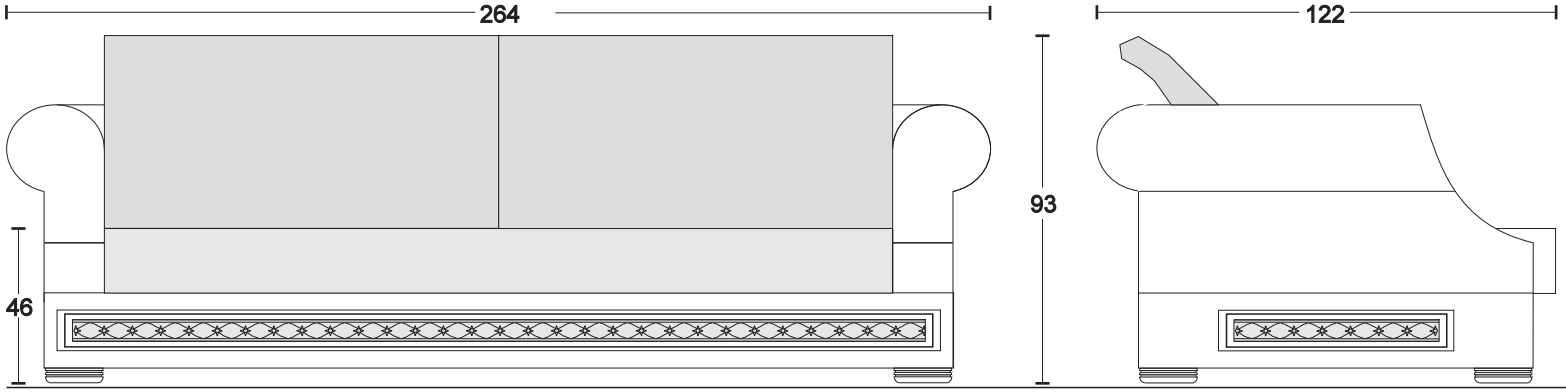

Pelle-Leather cat."SOFT"	Pelle-Leather cat."EXTRA"	Pelle-Leather cat."GLAM"
€ 11.220,00	€ 12.459,70	€ 13.851,20
Crystal stones € 11.726,00	Crystal stones € 12.965,70	Crystal stones € 14.355,00
Eco Nabuk Eco Nubuk	Velluto Velvet	
€ 8.615,20	€ 10.076,00	
Crystal stones € 9.411,60	Crystal stones € 10.873,50	

CONFORT-NOUVEAU-193 CLASSIC DIVANO - SOFA

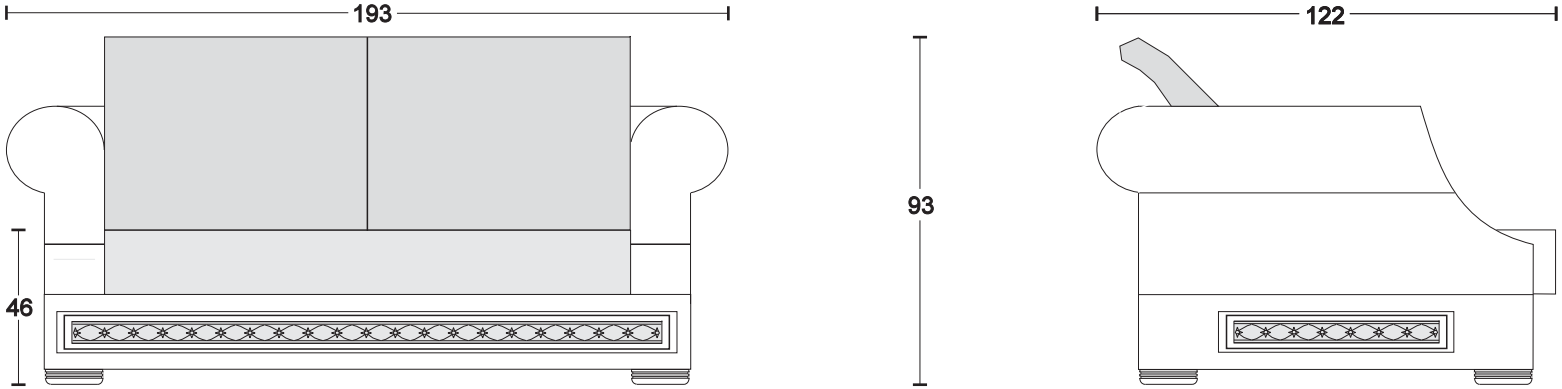

Pelle-Leather cat."SOFT"	Pelle-Leather cat."EXTRA"	Pelle-Leather cat."GLAM"
€ 9.713,00	€ 10.411,50	€ 11.599,50
Crystal stones € 10.094,70	Crystal stones € 10.791,00	Crystal stones € 11.979,00
Eco Nabuk Eco Nubuk	Velluto Velvet	
€ 7.249,00	€ 8.523,90	
Crystal stones € 8.058,60	Crystal stones € 9.333,50	

CONFORT-NOUVEAU-125 CLASSIC POLTRONA - ARMCHAIR

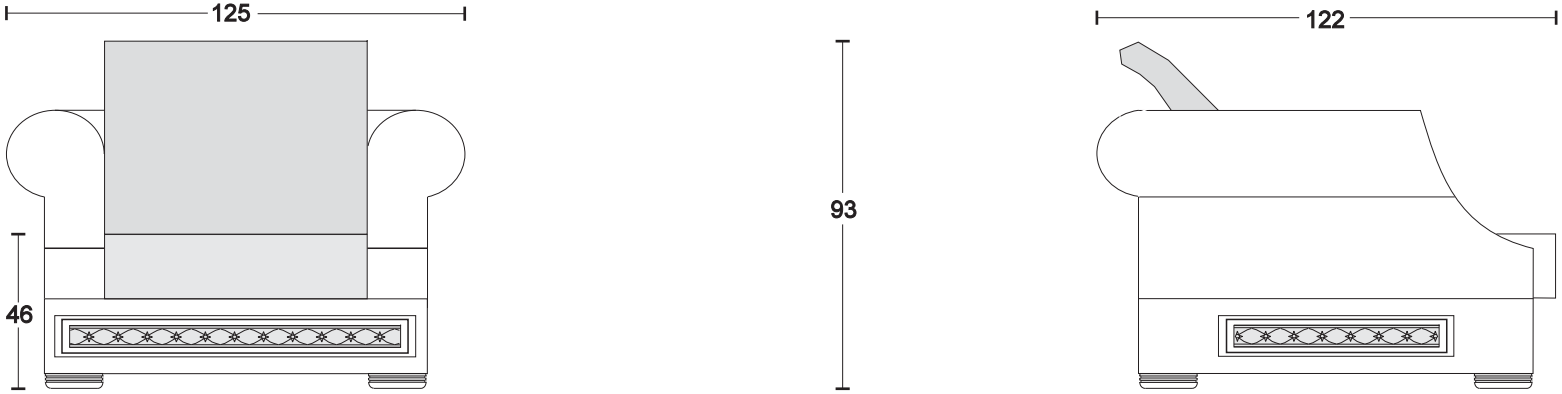

Pelle-Leather cat."SOFT"	Pelle-Leather cat."EXTRA"	Pelle-Leather cat."GLAM"
€ 7.161,00	€ 7.920,00	€ 8.717,50
Crystal stones € 7.474,50	Crystal stones € 8.233,50	Crystal stones € 9.031,00
Eco Nabuk Eco Nubuk	Velluto Velvet	
€ 5.629,80	€ 6.547,20	
Crystal stones € 6.299,70	Crystal stones € 7.217,10	

CONFORT-NOUVEAU-264 LUMBAR CUSHION CLASSIC — DIVANO - SOFA

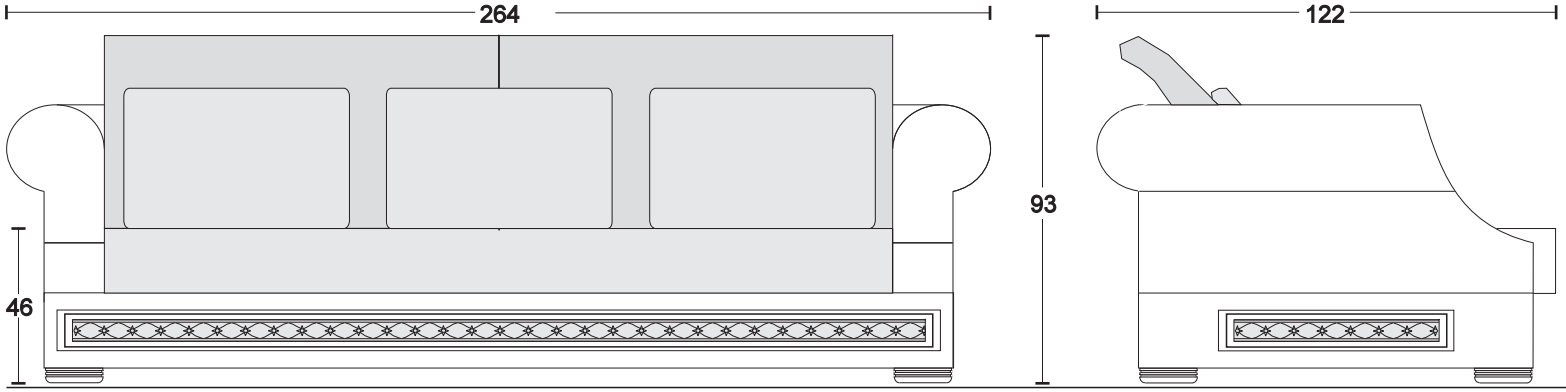

Pelle-Leather cat."SOFT"	Pelle-Leather cat."EXTRA"	Pelle-Leather cat."GLAM"
€ 12.358,50	€ 13.788,50	€ 15.369,20
Crystal stones € 12.864,50	Crystal stones € 14.294,50	Crystal stones € 15.875,20
Eco Nabuk Eco Nubuk	Velluto Velvet	
€ 9.374,20	€ 11.012,10	
Crystal stones € 10.170,60	Crystal stones € 11.809,60	

CONFORT-NOUVEAU-192 LUMBAR CUSHION CLASSIC — DIVANO - SOFA

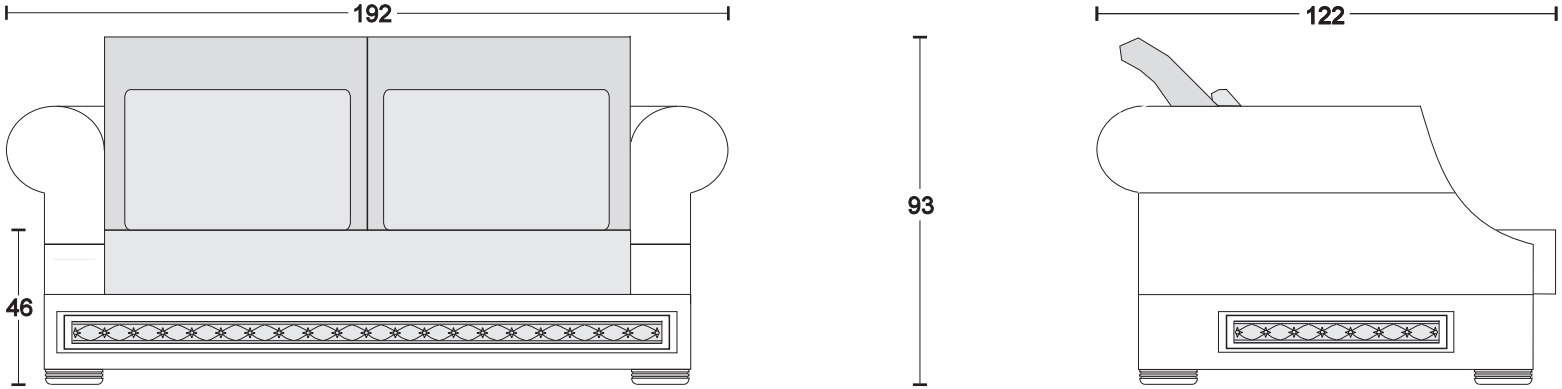

Pelle-Leather cat."SOFT"	Pelle-Leather cat."EXTRA"	Pelle-Leather cat."GLAM"
€ 10.474,20	€ 11.297,00	€ 12.611,50
Crystal stones € 10.853,70	Crystal stones € 11.676,50	Crystal stones € 12.991,00
Eco Nabuk Eco Nubuk	Velluto Velvet	
€ 7.249,00	€ 8.523,90	
Crystal stones € 8.058,60	Crystal stones € 9.333,50	

CONFORT-NOUVEAU-125 LUMBAR CUSHION CLASSIC — POLTRONA - ARMCHAIR

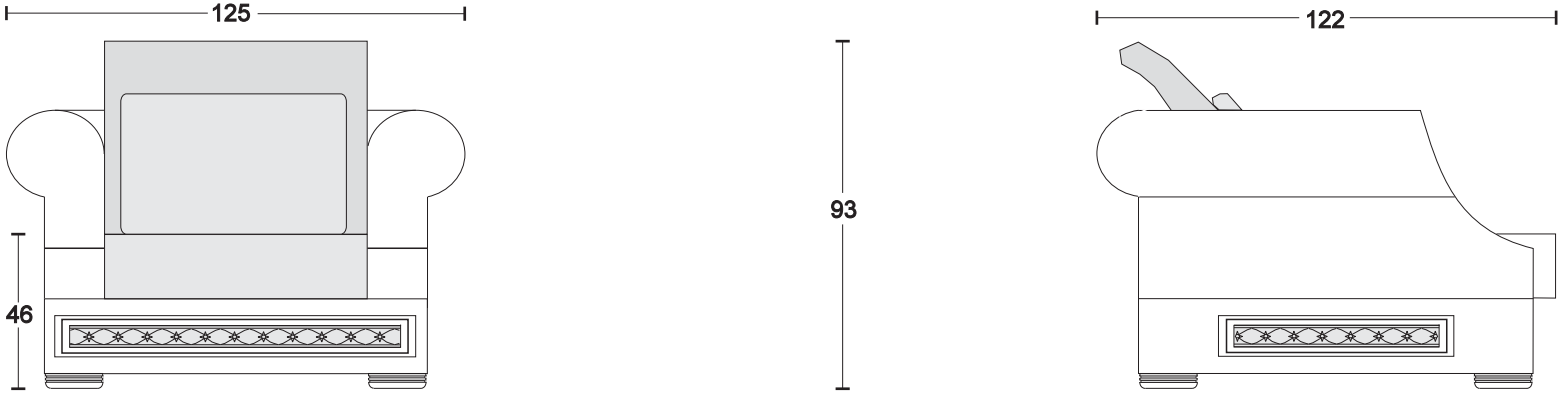

Pelle-Leather cat."SOFT"	Pelle-Leather cat."EXTRA"	Pelle-Leather cat."GLAM"
€ 7.540,50	€ 8.360,00	€ 9.223,50
Crystal stones € 7.854,00	Crystal stones € 8.677,90	Crystal stones € 9.538,10
Eco Nabuk Eco Nubuk	Velluto Velvet	
€ 5.882,80	€ 6.856,30	
Crystal stones € 6.552,70	Crystal stones € 7.527,30	

CONFORT NOUVEAU- CLASSIC CHAISE LOUNGE - DX

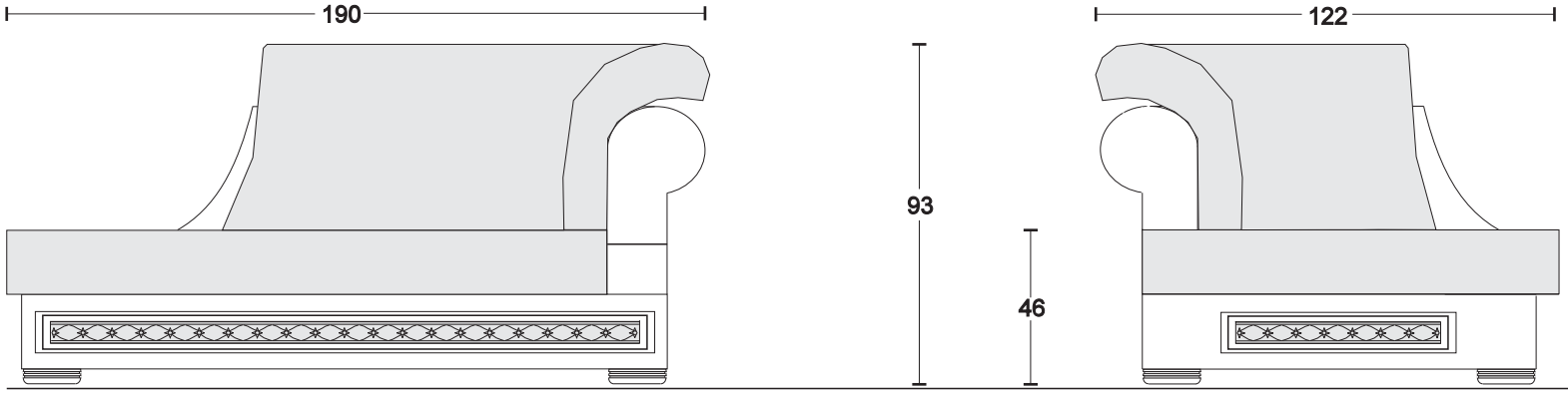

Pelle-Leather cat."SOFT"	Pelle-Leather cat."EXTRA"	Pelle-Leather cat."GLAM"
€ 9.713,00	€ 10.296,00	€ 11.258,50
Crystal stones € 10.351,00	Crystal stones € 10.928,50	Crystal stones € 11.891,00
Eco Nabuk Eco Nubuk	Velluto Velvet	
€ 7.552,60	€ 8.655,90	
Crystal stones € 8.185,10	Crystal stones € 9.288,40	

CONFORT NOUVEAU- CLASSIC CHAISE LOUNGE - SX

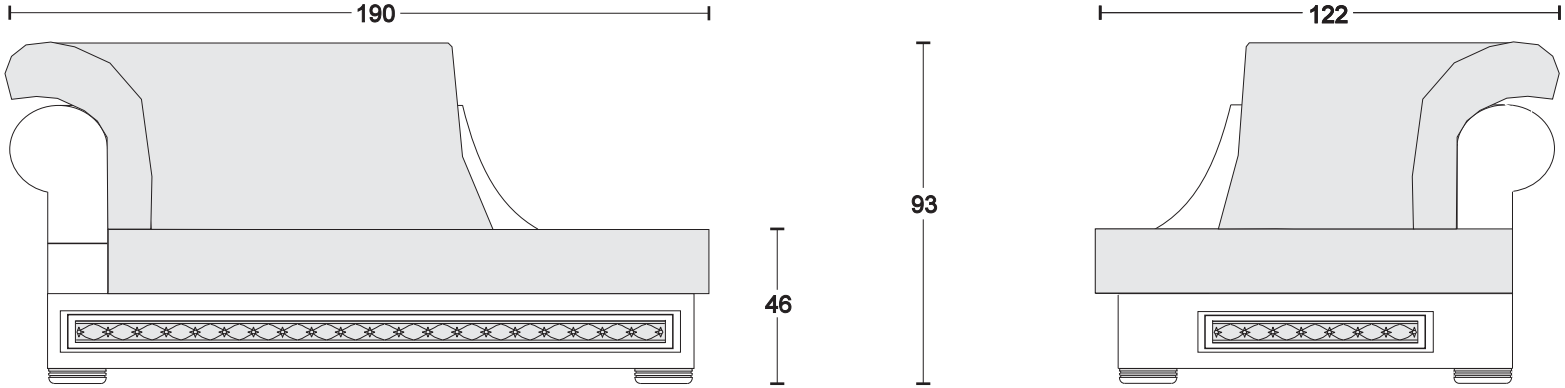

Pelle-Leather cat."SOFT"	Pelle-Leather cat."EXTRA"	Pelle-Leather cat."GLAM"
€ 9.713,00	€ 10.296,00	€ 11.258,50
Crystal stones € 10.351,00	Crystal stones € 10.928,50	Crystal stones € 11.891,00
Eco Nabuk Eco Nubuk	Velluto Velvet	
€ 7.552,60	€ 8.655,90	
Crystal stones € 8.185,10	Crystal stones € 9.288,40	

CONFORT NOUVEAU

Pelle Leather cat.SOFT	Pelle Leather cat.EXTRA	Pelle Leather cat.GLAM	Eco Nabuk Eco Nubuk	Velluto Velvet
€ 495,00	€ 583,00	€ 676,50	€ 284,90	€ 367,40

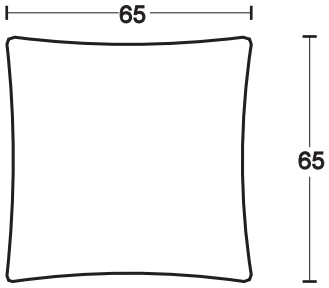

EXTRA CUSCINO - EXTRA CUSCION 65-55-45

Pelle Leather cat.SOFT	Pelle Leather cat.EXTRA	Pelle Leather cat.GLAM	Eco Nabuk Eco Nubuk	Velluto Velvet
€ 456,50	€ 533,50	€ 632,50	€ 266,20	€ 335,50

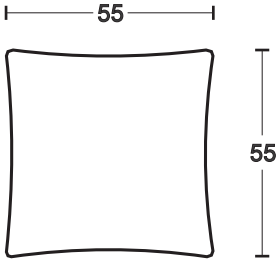

Pelle Leather cat.SOFT	Pelle Leather cat.EXTRA	Pelle Leather cat.GLAM	Eco Nabuk Eco Nubuk	Velluto Velvet
€ 412,50	€ 484,00	€ 561,00	€ 242,00	€ 303,60

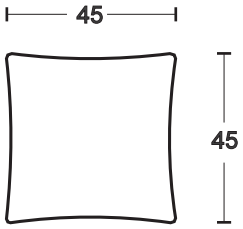

PLAY ROOM - POOL TABLE 10-12 FEET - CLASSIC

10 piedi dimensioni campo gioco cm. 284 x 142 - Dimensioni esterne cm. 320 x 178 - Russo H. 80; Snooker inglese H. 80; Americano H. 78
10 Feet playng fiel dimention cm. 284 x 142 - External dimention cm. 320 x 178 - Russian H. 80; English Snooker H. 80; American H. 78
Con piano in ardesia 40 mm - With playground stone slate 40 mm

12 piedi dimensioni campo gioco cm. 355 x 177 - Dimensioni esterne cm. 391 x 213 - Russo H. 80; Snooker inglese H. 80; Americano H. 78
12 Feet playng fiel dimention cm. 355 x 177 - External dimention cm. 391 x 213 - Russian H. 80; English Snooker H. 80; American H. 78
Con piano in ardesia 40 mm - With playground stone slate 40 mm

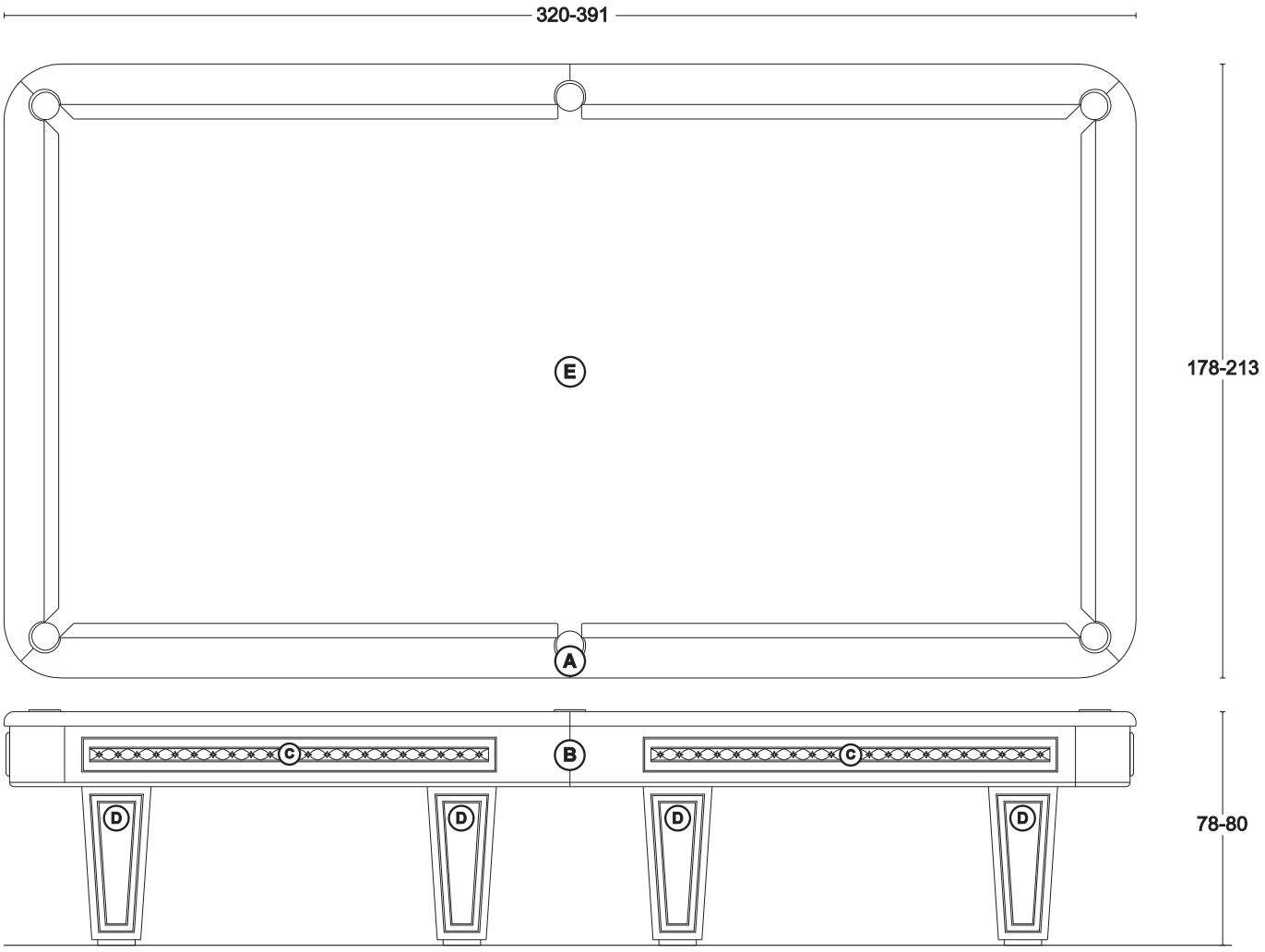

A+B+D Tutti i Laccato opaco / All Opaque laquered — D Decorazioni: Oro/Argento foglia / D Decoration: Gold/Silver foil

C Inserti: Tutte le combinazioni di oro/argento foglia con tutti i laccati
Insert: Gold/Silver foil combined with all laquered

E Tappeto biliardo colori diversi - Pool table cloth different colours

10 PIEDI-10 FEET € 60.846,50
12 PIEDI-12 FEET € 72.737,50

A+B+D Tutti i Laccato lucido / All Glossy laquered — D Decorazioni: Oro/Argento foglia / D Decoration: Gold/Silver foil

C Inserti: Tutte le combinazioni con oro/argento foglia con laccati
Insert: Gold/Silver foil combined with all laquered

E Tappeto biliardo colori diversi - Pool table cloth different colours

10 PIEDI-10 FEET € 61.985,00
12 PIEDI-12 FEET € 73.876,00

PLAY ROOM - POOL LAMP 10-12 FEET - CLASSIC

Lampada a LED per biliardo da 10-12 piedi - 170 Watt - peso kg. 85
LED Lamp for Pool 10-12 Feet - 170 Watt - Weight Kg. 85

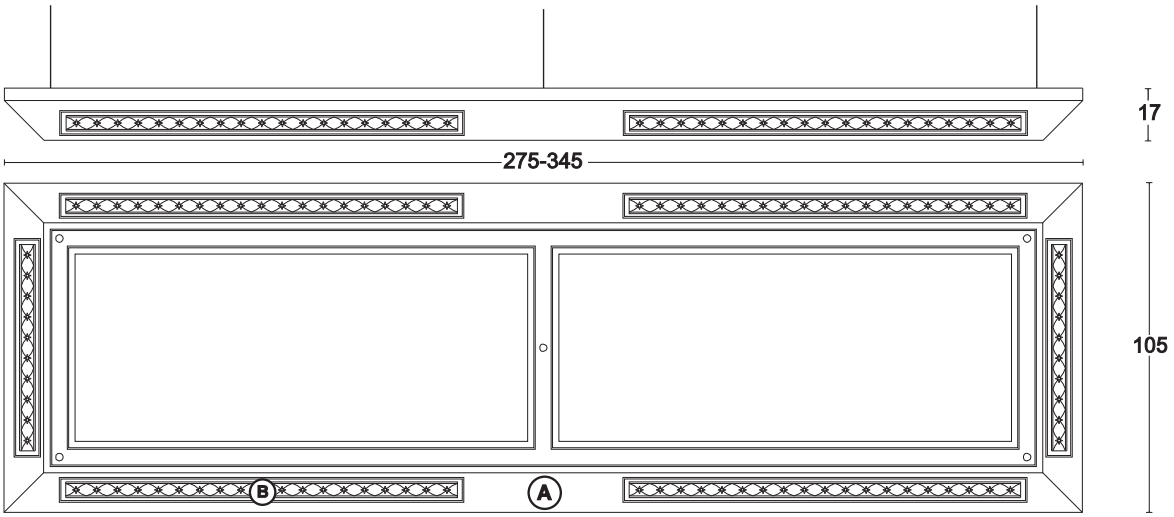

(A) Tutti i Laccato opaco - All Opaque laquered **€ 11.322,30**

(B) Inserti: Tutte le combinazioni di oro/argento foglia con tutti i laccati
Insert: Gold/Silver foil combined with all laquered

(A) Tutti i Laccato lucido - All Glossy laquered **€ 12.334,30**

(B) Inserti: Tutte le combinazioni con oro/argento foglia con laccati
Insert: Gold/Silver foil combined with all laquered

CUE RACK-BODY-R - CLASSIC

Porta stecche per biliardo da 10-12 piedi con orologio al quarzo
Pool Cue Rack for 10-12 Feet with quarz clock

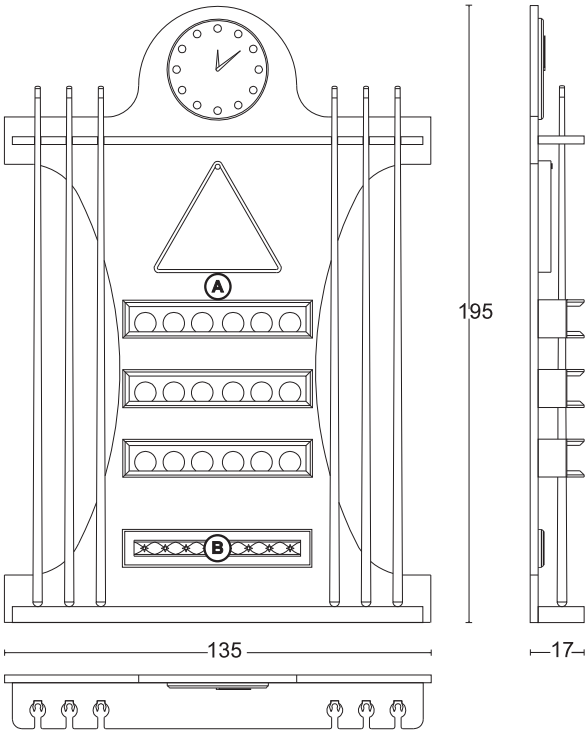

(A) Tutti i Laccato opaco - All Opaque laquered **€ 5.250,30**

(B) Inserti: Tutte le combinazioni di oro/argento foglia con tutti i laccati
Insert: Gold/Silver foil combined with all laquered

(A) Tutti i Laccato lucido - All Glossy laquered **€ 6.009,30**

(B) Inserti: Tutte le combinazioni di oro/argento foglia con tutti i laccati
Insert: Gold/Silver foil combined with all laquered

- stecche in legno L.-Standard - da cm.160 (set 6 pezzi) - wooden Pool cue L.-Standard - cm. 160 (set 6 pieces) **€ 2.428,80**
- Set biglie Ø 52,4 mm. Snooker inglese - Ø 57mm. per Pool americano - Ø 68 mm per Piramide russa **€ 607,20**
  Set balls Ø 52,4 mm. english Snooker - Ø 57mm. American Pool - Ø 68 mm Russian Piramid

PLAY ROOM - POOL TABLE 8-9 FEET - CLASSIC

8 piedi dimensioni campo gioco cm. 224 x 112 - Dimensioni esterne cm. 260 x 148 - Russo H. 80; Snooker inglese H. 80; Americano H. 78
8 Feet playng fiel dimention cm. 224 x 112 - External dimention cm. 260 x 148 - Russian H. 80; English Snooker H. 80; American H. 78
Con piano in ardesia 25 mm - With playground stone slate 25 mm

9 piedi dimensioni campo gioco cm. 254 x 112 - Dimensioni esterne cm. 290 x 163 - Russo H. 80; Snooker inglese H. 80; Americano H. 78
9 Feet playng fiel dimention cm. 254 x 127 - External dimention cm. 290 x 163 - Russian H. 80; English Snooker H. 80; American H. 78
Con piano in ardesia 25 mm - With playground stone slate 25 mm

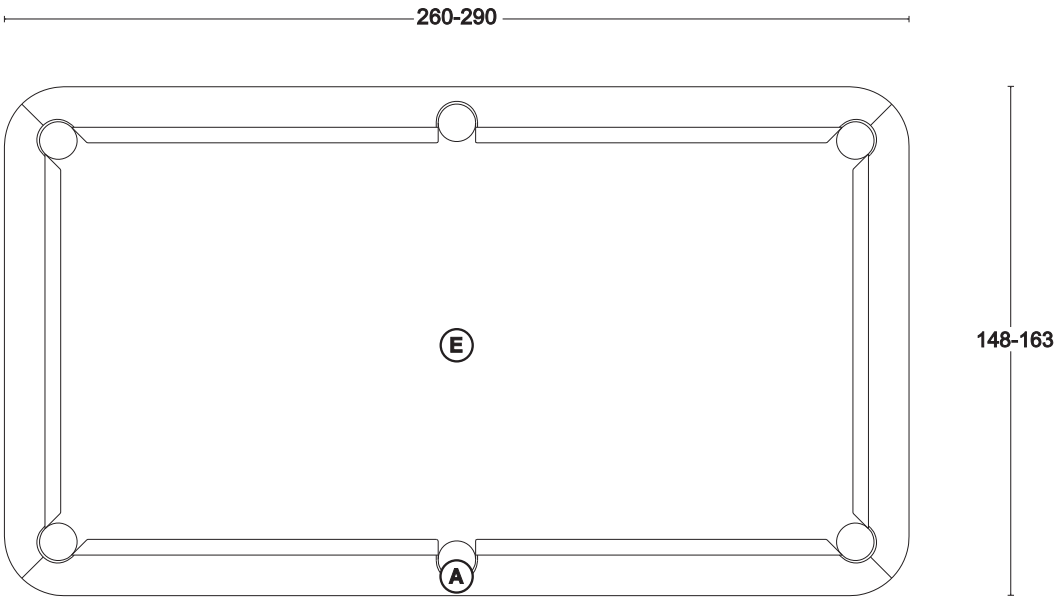

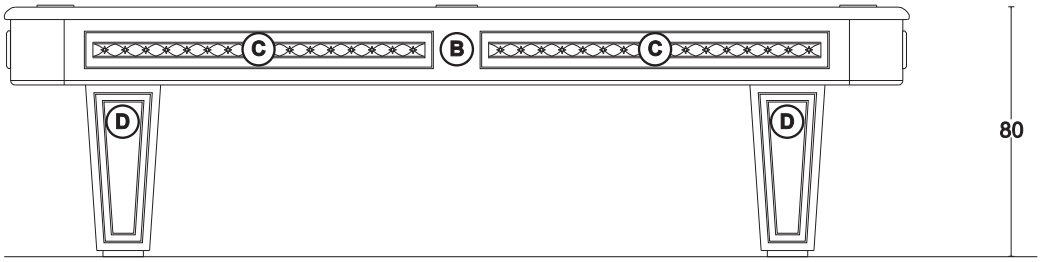

A+B+D Tutti i Laccato opaco / All Opaque laquered — D Decorazioni: Oro/Argento foglia / D Decoration: Gold/Silver foil

C Inserti: Tutte le combinazioni di oro/argento foglia con tutti i laccati
Insert: Gold/Silver foil combined with all laquered

E Tappeto biliardo colori diversi - Pool table cloth different colours

8 PIEDI-8 FEET € 41.745,00
9 PIEDI-9 FEET € 41.745,00

A+B+D Tutti i Laccato lucido / All Glossy laquered — D Decorazioni: Oro/Argento foglia / D Decoration: Gold/Silver foil

C Inserti: Tutte le combinazioni con oro/argento foglia con laccati
Insert: Gold/Silver foil combined with all laquered

E Tappeto biliardo colori diversi - Pool table cloth different colours

8 PIEDI-8 FEET € 42.757,00
9 PIEDI-9 FEET € 42.757,00

PLAY ROOM - POOL LAMP 8-9 FEET - CLASSIC

Lampada a LED per biliardo da 8-9 piedi - 130 Watt - peso kg. 70
LED Lamp for Pool 8-9 Feet - 130 Watt - Weight Kg. 70

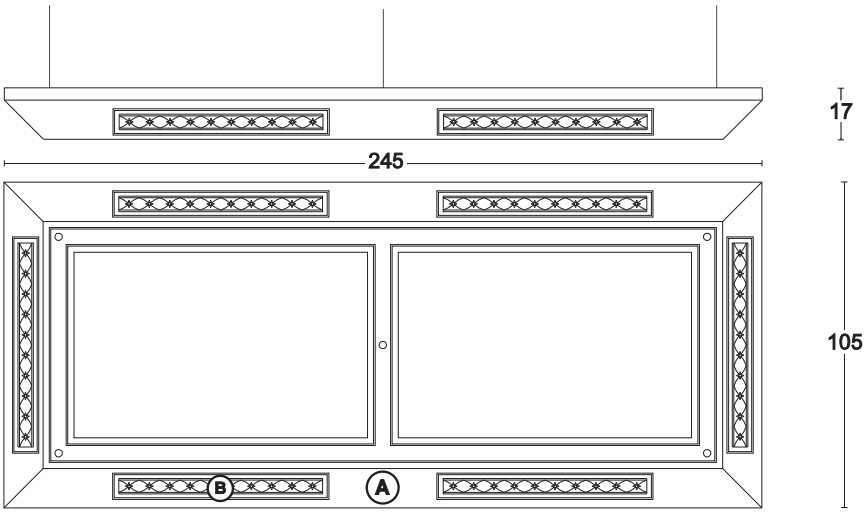

(A) Tutti i Laccato opaco - All Opaque laquered **€ 9.361,00**

(B) Inserti: Tutte le combinazioni di oro/argento foglia con tutti i laccati
Insert: Gold/Silver foil combined with all laquered

(A) Tutti i Laccato lucido - All Glossy laquered **€ 10.120,00**

(B) Inserti: Tutte le combinazioni con oro/argento foglia con laccati
Insert: Gold/Silver foil combined with all laquered

CUE RACK-BODY-A - CLASSIC

Porta stecche per biliardo da 8-9 piedi con orologio al quarzo
Pool Cue Rack for 8-9 Feet with quarz clock

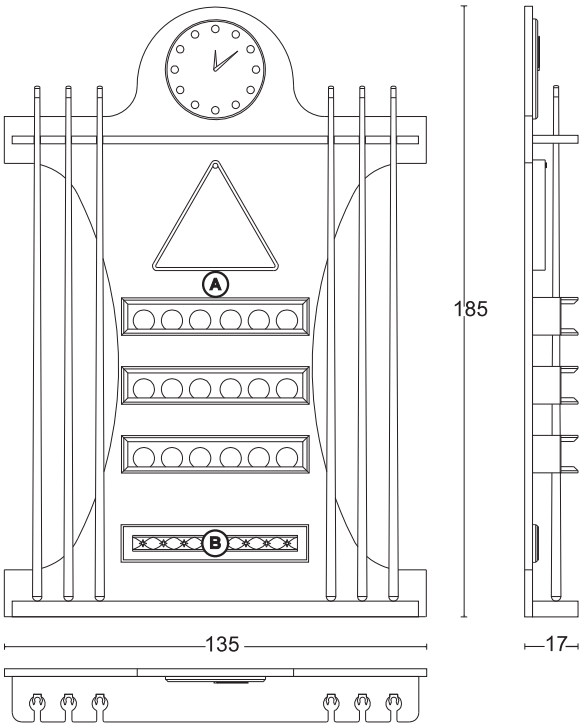

(A) Tutti i Laccato opaco - All Opaque laquered **€ 5.250,30**

(B) Inserti: Tutte le combinazioni di oro/argento foglia con tutti i laccati
Insert: Gold/Silver foil combined with all laquered

(A) Tutti i Laccato lucido - All Glossy laquered **€ 6.009,30**

(B) Inserti: Tutte le combinazioni di oro/argento foglia con tutti i laccati
Insert: Gold/Silver foil combined with all laquered

- stecche in legno L.-Standard - da cm.145 (set 6 pezzi) - wooden Pool cue L.-Standard - cm. 145 (set 6 pieces) **€ 1.821,60**
- Set biglie Ø 52,4 mm. Snooker inglese - Ø 57mm. per Pool americano - Ø 68 mm per Piramide russa **€ 607,20**
  Set balls Ø 52,4 mm. english Snooker - Ø 57mm. American Pool - Ø 68 mm Russian Piramid

GLASS EYES 148 > 185

VISMARADESIGN®

TV - LIFT & FIRE - 158 - GLASS EYES

Struttura per Home Cinema - a parete (con salita TV motorizzata computerizzata e telecomandata - completo di Bio-Camino ecologico)
Home Cinema - Wall Rack (motorized, computerized and remote-controlled TV lift system - provided with ecological bio-fireplace)

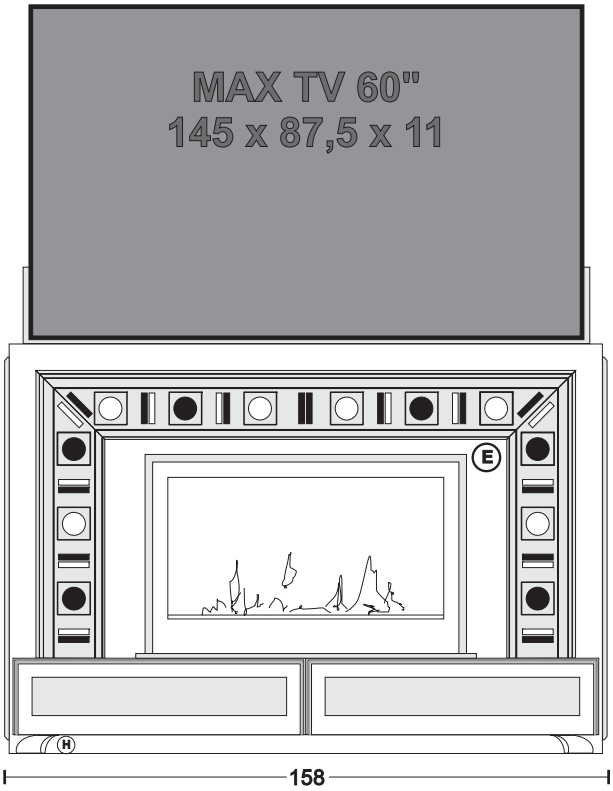

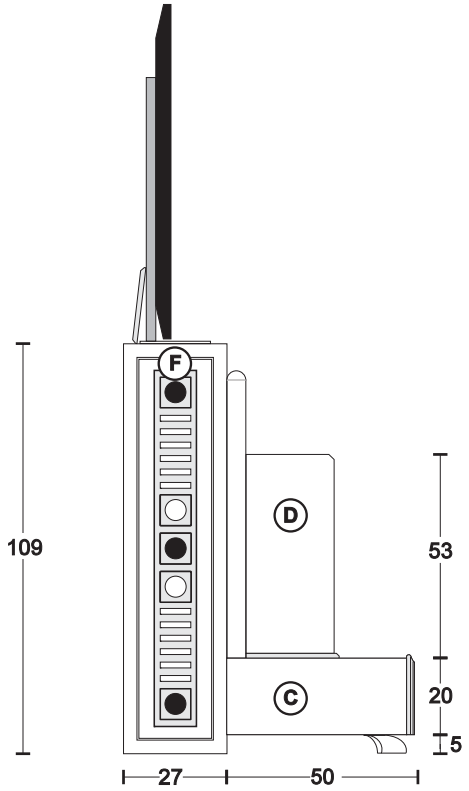

Finiture e combinazioni - Finishings and combinations

A + F Oro/Argento foglia+formelle Murano Rosso-Nero-Bianco
(Gold/Silver foil+Murano Glass:Red-Black-White)

B + C + D + E Tutti i laccati opachi - decorazioni argento/oro foglia
(all opaque laquering - silver/gold foil decorations)

H Argento/Oro foglia
(Silver/Gold foil)

L Vetri:Bianco/Fume
(glass white or fume)

€ 19.277,50

A + F Nero/Bianco Lucido+formelle Murano Nero-Bianco
(gloss White/Black+Murano Glass:Black-White)

B + C + D + E Nero/Bianco opaco - decorazioni argento/oro foglia
(opaque Black/White - silver/gold foil decorations)

H Argento/Oro foglia
(Silver/Gold foil)

L Vetri:Bianco/Fume
(glass white or fume)

€ 19.657,00

TV - LIFT & BAR - 158 - GLASS EYES

Struttura per Home Cinema - a parete (con salita TV motorizzata computerizzata e telecomandata - completo di Mobile a 3 ante push)
Home Cinema - Wall Rack (with motorized, computerized and remote-controlled TV lift system - provided with a 3 push-doors cabinet)

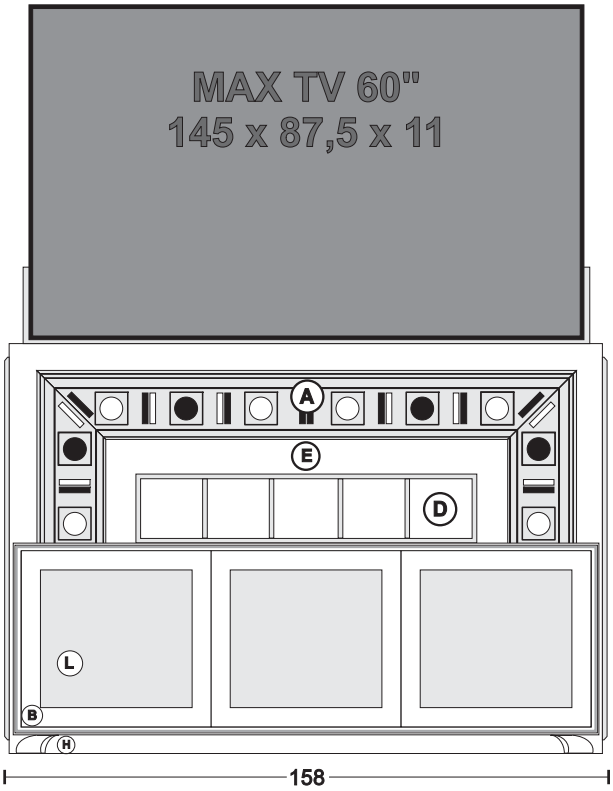

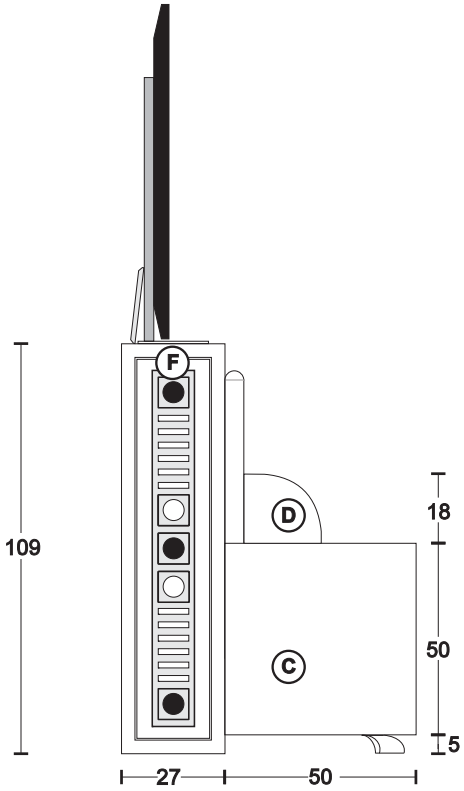

Finiture e combinazioni - Finishings and combinations

A + F Oro/Argento foglia+formelle Murano Rosso-Nero-Bianco
(Gold/Silver foil+Murano Glass:Red-Black-White)

B + C + D + E Tutti i laccati opachi - decorazioni argento/oro foglia
(all opaque laquering - silver/gold foil decorations)

H Argento/Oro foglia
(Silver/Gold foil)

L Vetri:Bianco/Fume
(glass white or fume)

€ 17.406,40

A + F Nero/Bianco Lucido+formelle Murano Nero-Bianco
(gloss White/Black+Murano Glass:Black-White)

B + C + D + E Nero/Bianco opaco - decorazioni argento/oro foglia
(opaque Black/White - silver/gold foil decorations)

H Argento/Oro foglia
(Silver/Gold foil)

L Vetri:Bianco/Fume
(glass white or fume)

€ 17.785,90

TV - LIFT & FIRE - 182 - GLASS EYES

Struttura per Home Cinema - a parete (con salita TV motorizzata computerizzata e telecomandata - completo di Bio-Camino ecologico)
Home Cinema - Wall Rack (motorized, computerized and remote-controlled TV lift system - provided with ecological bio-fireplace)

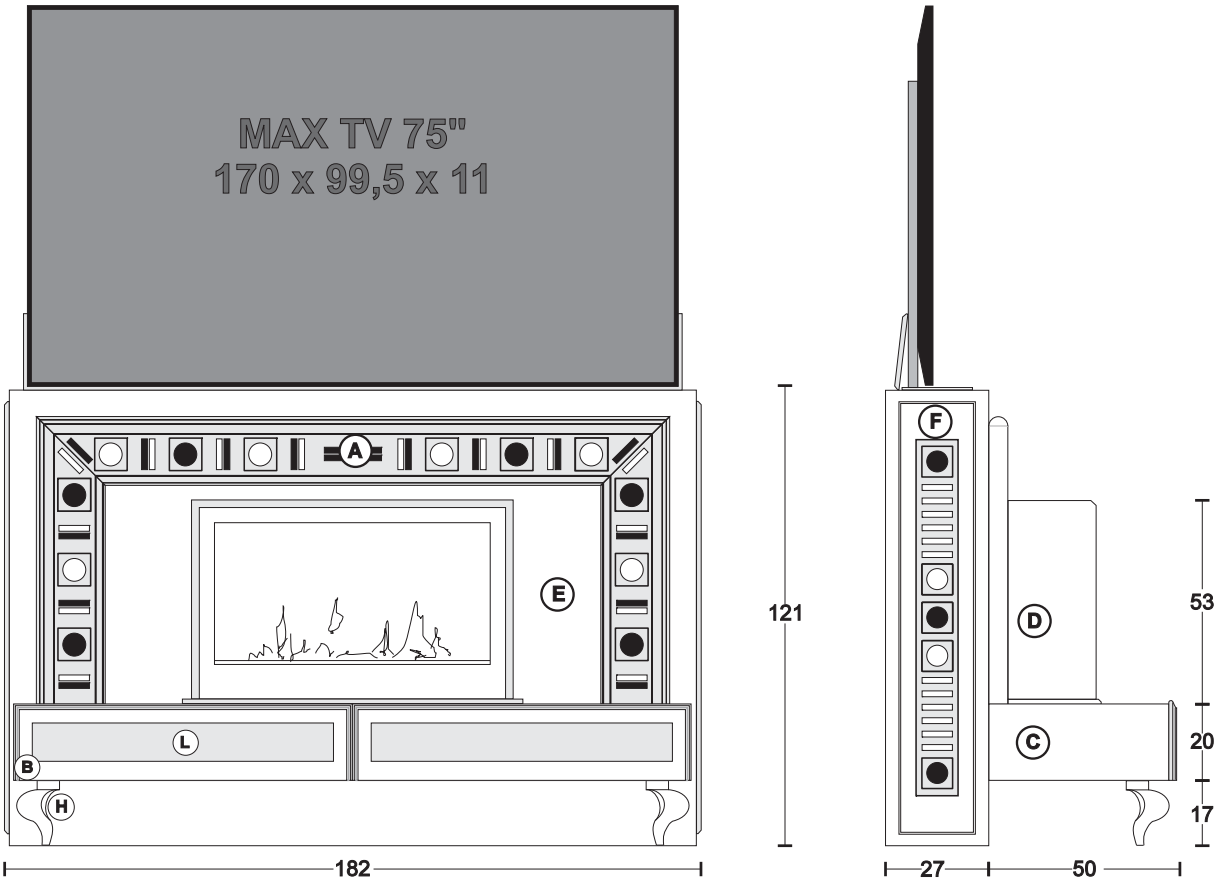

Finiture e combinazioni - Finishings and combinations

A + F Oro/Argento foglia+formelle Murano Rosso-Nero-Bianco
(Gold/Silver foil+Murano Glass:Red-Black-White)

B + C + D + E Tutti i laccati opachi - decorazioni argento/oro foglia
(all opaque laquering - silver/gold foil decorations)

H Argento/Oro foglia
(Silver/Gold foil)

L Vetri:Bianco/Fume
(glass white or fume)

€ 19.668,00

A + F Nero/Bianco Lucido+formelle Murano Nero-Bianco
(gloss White/Black+Murano Glass:Black-White)

B + C + D + E Nero/Bianco opaco - decorazioni argento/oro foglia
(opaque Black/White - silver/gold foil decorations)

H Argento/Oro foglia
(Silver/Gold foil)

L Vetri:Bianco/Fume
(glass white or fume)

€ 20.053,00

TV - LIFT & BAR - 182 - GLASS EYES

Struttura per Home Cinema - a parete (con salita TV motorizzata computerizzata e telecomandata - completo di Mobile a 4 ante push)
Home Cinema - Wall Rack (with motorized, computerized and remote-controlled TV lift system - provided with a 4 push-doors cabinet)

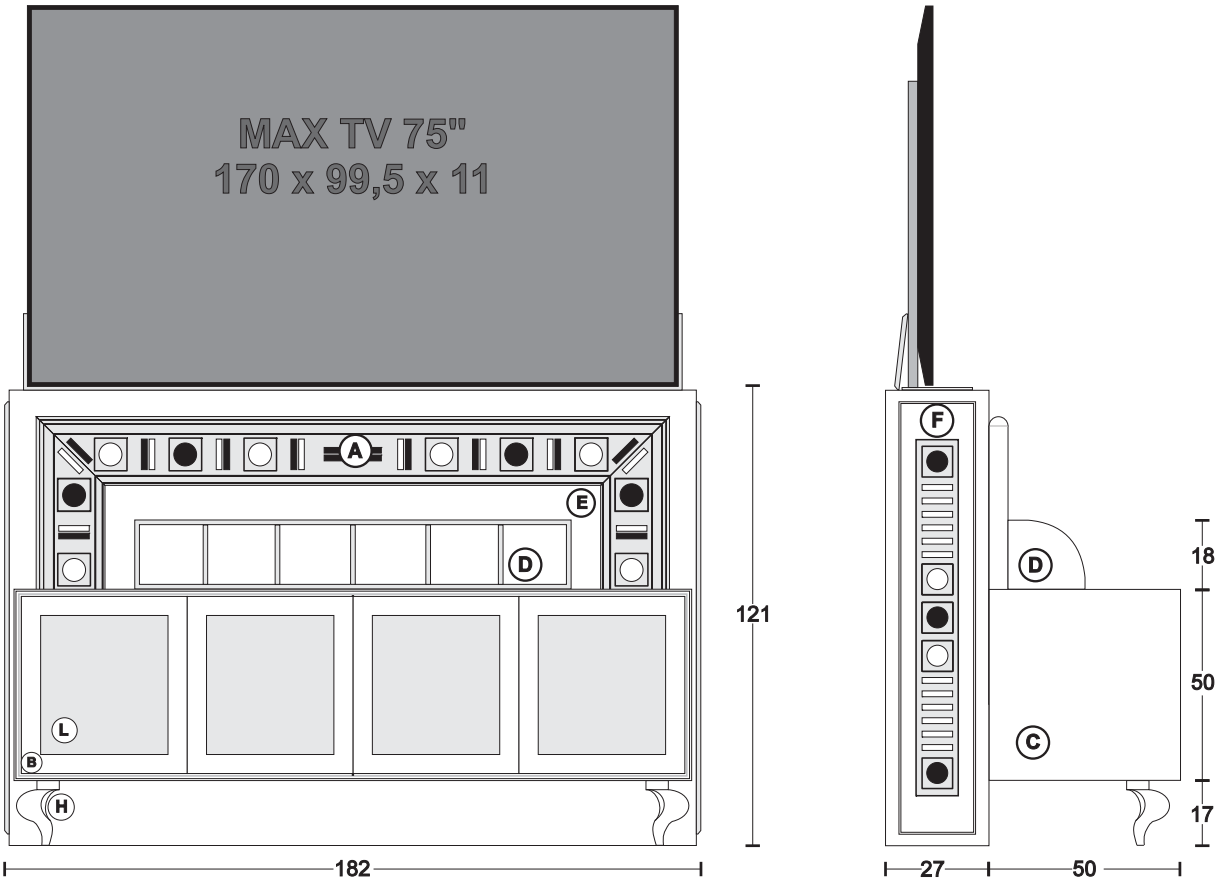

Finiture e combinazioni - Finishings and combinations

Ⓐ+Ⓕ Oro/Argento foglia+formelle Murano Rosso-Nero-Bianco
(Gold/Silver foil+Murano Glass:Red-Black-White)

Ⓑ+Ⓒ+Ⓓ+Ⓔ Tutti i laccati opachi - decorazioni argento/oro foglia
(all opaque laquering - silver/gold foil decorations)

Ⓗ Argento/Oro foglia
(Silver/Gold foil)

Ⓛ Vetri:Bianco/Fume
(glass white or fume)

€ 17.902,50

Ⓐ+Ⓕ Nero/Bianco Lucido+formelle Murano Nero-Bianco
(gloss White/Black+Murano Glass:Black-White)

Ⓑ+Ⓒ+Ⓓ+Ⓔ Nero/Bianco opaco - decorazioni argento/oro foglia
(opaque Black/White - silver/gold foil decorations)

Ⓗ Argento/Oro foglia
(Silver/Gold foil)

Ⓛ Vetri:Bianco/Fume
(glass white or fume)

€ 18.282,00

SLIDING HOME CINEMA - GLASS EYES

Struttura per Home Cinema - a parete con apertura motorizzata, computerizzata e telecomandata - luci led laterali
Home Cinema - Wall Rack - Motorized and computerized opening, with remote control - LED lights on sides

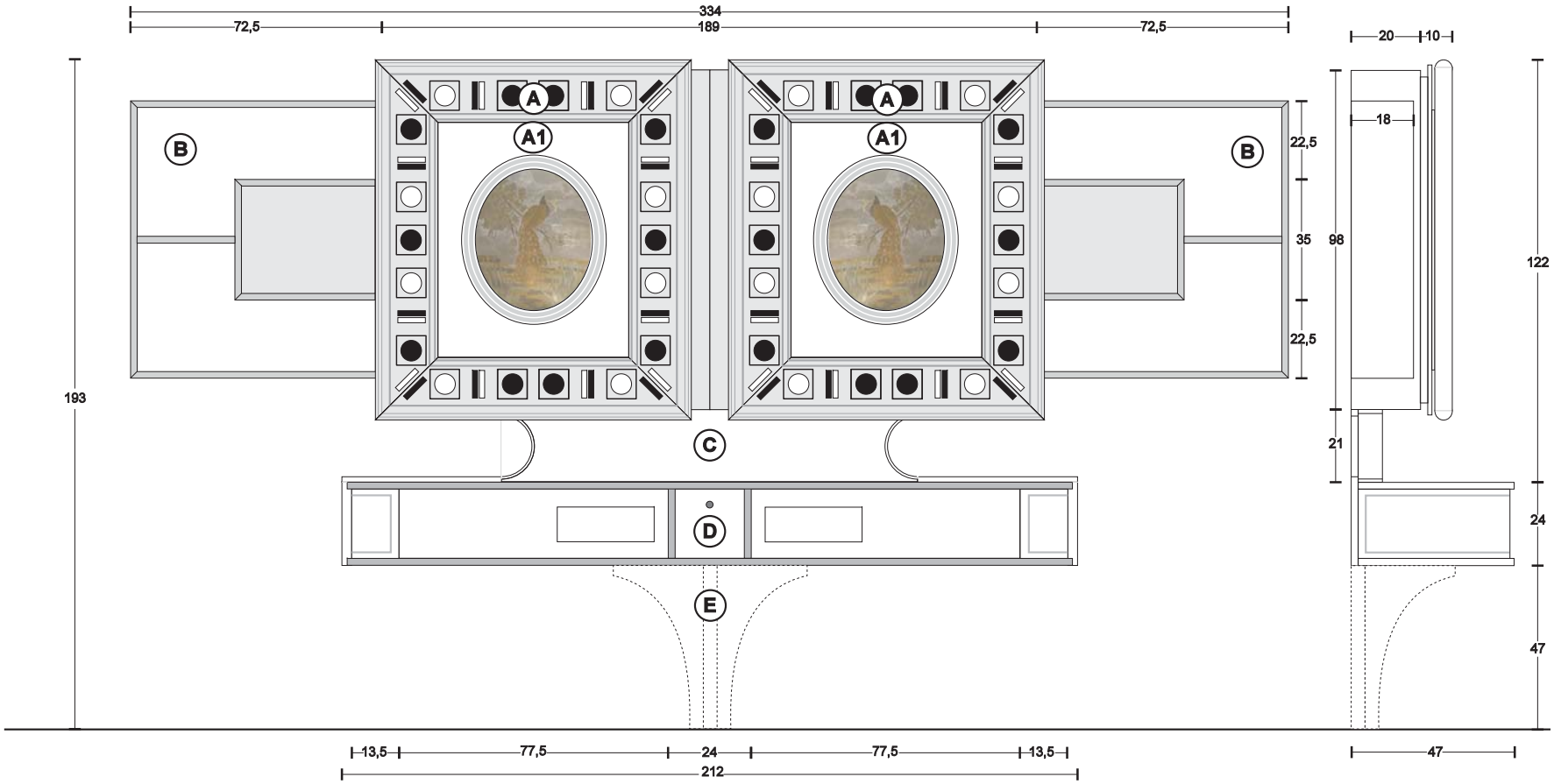

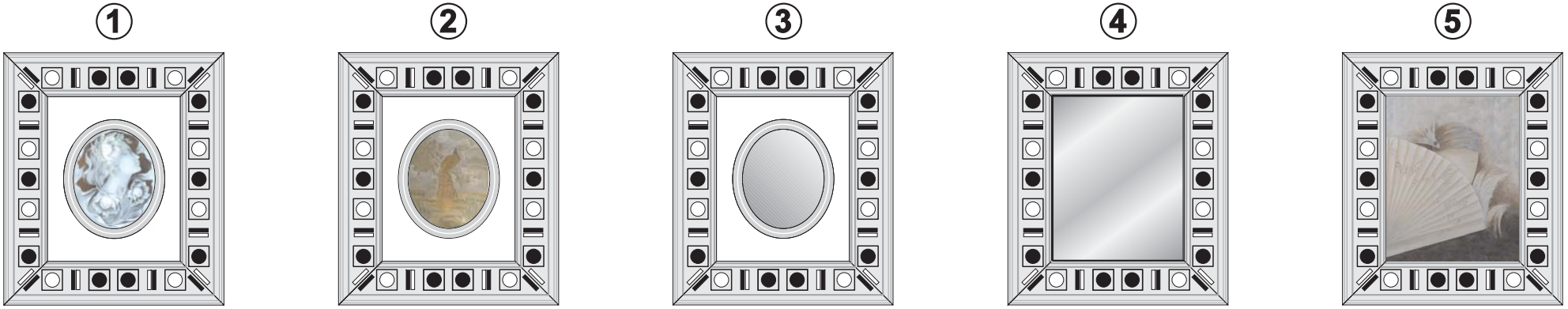

SLIDING HOME CINEMA - GLASS EYES

Struttura per Home Cinema - a parete con apertura motorizzata, computerizzata e telecomandata - luci led laterali
Home Cinema - Wall Rack - Motorized and computerized opening, with remote control - LED lights on sides

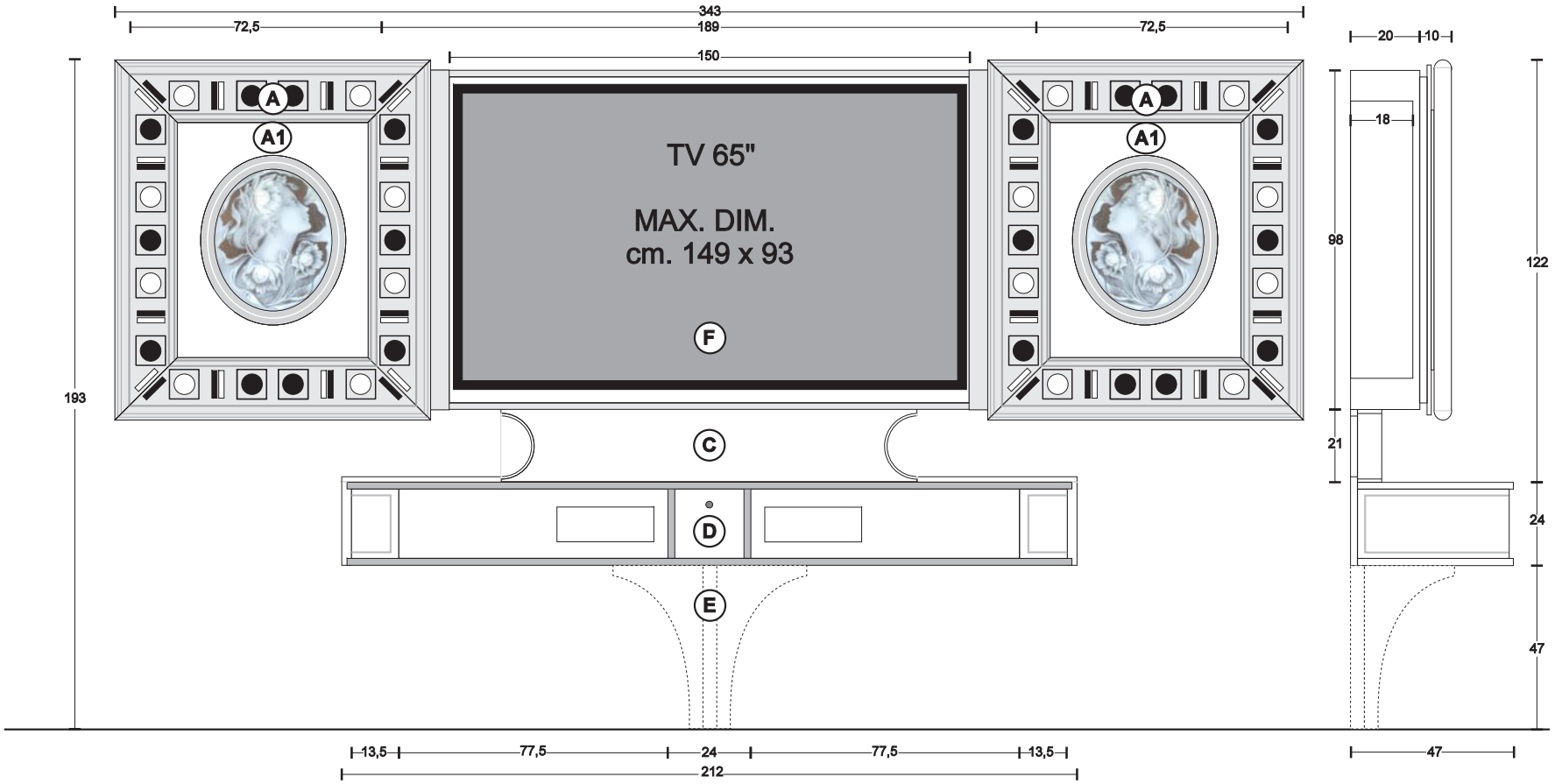

(A) Oro/Argento foglia formelle Murano Rosso-Nero-Bianco
Gold/Silver foil-Murano Glass: Red-Black-White

(A1) + (C) + (E) + (F) Tutti i laccati opachi
all opaque laquering

(B) Tutti i laccati opachi-Decorazioni Oro/Argento
all opaque laquering-decoration gold/silver foil

(D) Top Oro/Argento Foglia-parti rimanenti tutti i laccati opachi-Decorazioni Oro/Argento
Top gold/silver foil-remaining parts all opaque laquering-decoration gold/silver foil

Con-with (1) EURO 25.881,90 | Con-with (2) EURO 29.183,00 | Con-with (3) EURO 25.224,10 | Con-with (4) EURO 25.249,40 | Con-with (5) EURO 26.109,60

(A) Bianco/Nero lucido-formelle Murano Bianco o Nero
Gloss White/Black-Murano Glass Black or White

(A1) + (C) + (E) + (F) Bianco/Nero opaco
opaque White/Black

(B) Bianco/nero opaco-Decorazioni Argento foglia
opaque White/Black-decoration Silverfoil

(D) Top Argento Foglia-parti rimanenti Bianco/nero opaco-Decorazioni Argento Foglia
Top silver foil-remaining parts opaque White/Black laquering-decoration silver foil

Con-with (1) EURO 26.413,20 | Con-with (2) EURO 29.715,40 | Con-with (3) EURO 25.755,40 | Con-with (4) EURO 25.780,70 | Con-with (5) EURO 26.640,90

REVOLVING HOME CINEMA - GLASS EYES

Struttura per Home Cinema - centro stanza con rotazione TV motorizzata, computerizzata e telecomandata
Home Cinema - Standing rack - Motorized and computerized revolving TV , with remote control

LATO -SIDE "A"

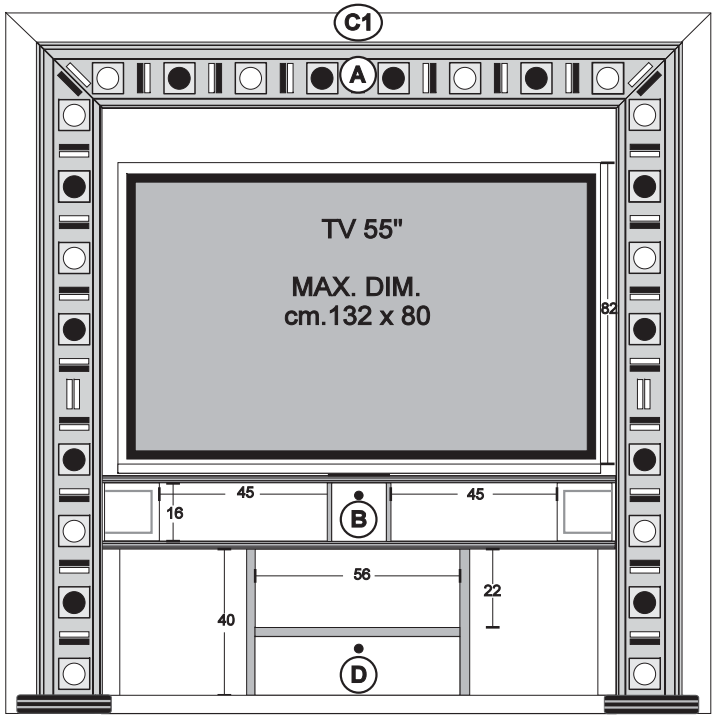

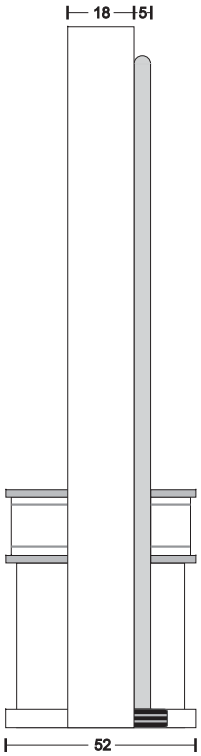

LATO -SIDE "B"

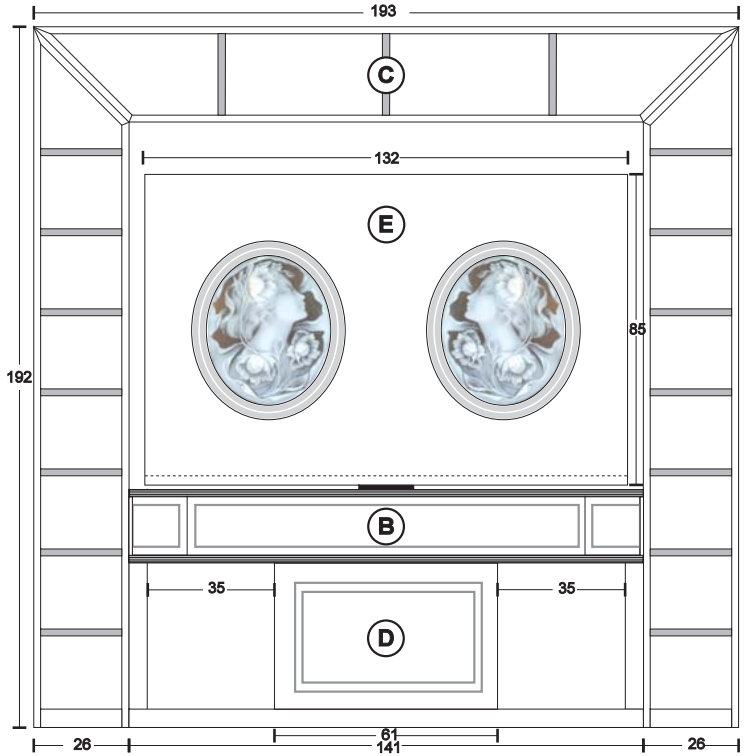

REVOLVING HOME CINEMA - GLASS EYES

Struttura per Home Cinema - centro stanza con rotazione TV motorizzata, computerizzata e telecomandata
Home Cinema - Standing rack - Motorized and computerized revolving TV , with remote control

DECORAZIONE PANNELLO LATO "B" -DECORATION PANEL SIDE "B"

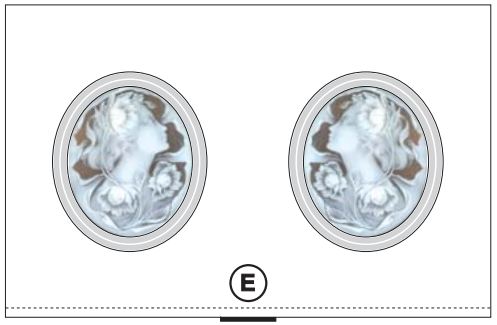

1 ovale con Cammeo
Oval with Cameo

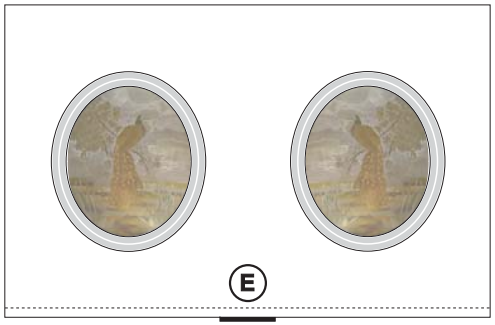

2 Ovale con Pavone Artistico oro 23/22/20/18/16/12 Carati
Oval with Artistic peacock Gold 23/22/20/18/16/12 carats

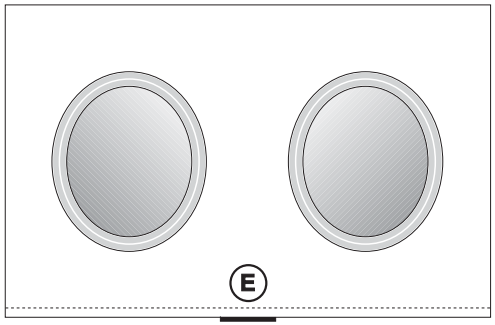

3 Ovale con specchio bisellato
Oval with bevelled mirror

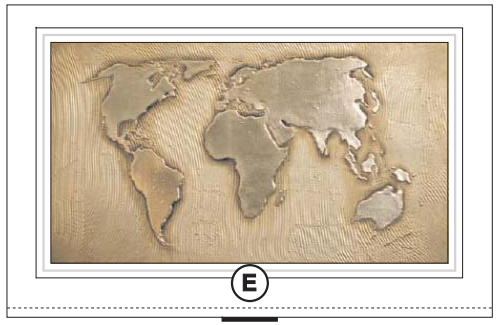

4 "Il Mondo" decorazione in rilievo in foglia platino
"The world" decoration in relief - platinum foil

A Oro/Argento foglia formelle Murano
Rosso-Nero-Bianco
Gold/Silver foil-Murano Glass: Red-Black-White

C1+C+E+D Tutti i laccati opachi-Decorazioni Oro/Argento
all opaque laquering-decoration gold/silver foil

B Oro/Argento Foglia/tutti i laccati opachi
Gold/silver foil all opaque laquering

Con-with 1 **EURO 17.339,30** Con-with 2 **EURO 20.791,10** Con-with 3 **EURO 16.754,10** Con-with 4 **EURO 18.284,20**

A Bianco/Nero lucido-formelle Murano
Bianco o Nero
Gloss White/Black-Murano Glass Black or White

C1+C+E+D Bianco/Nero opaco-Decorazioni Argento
opaque White/Black-decoration silver foil

B Argento Foglia
Silver foil

Con-with 1 **EURO 18.136,80** Con-with 2 **EURO 21.588,60** Con-with 3 **EURO 17.550,50** Con-with 4 **EURO 19.081,70**

THE WALL HOME CINEMA - GLASS EYES

Struttura per Home Cinema - a parete
Home Cinema - Wall Rack

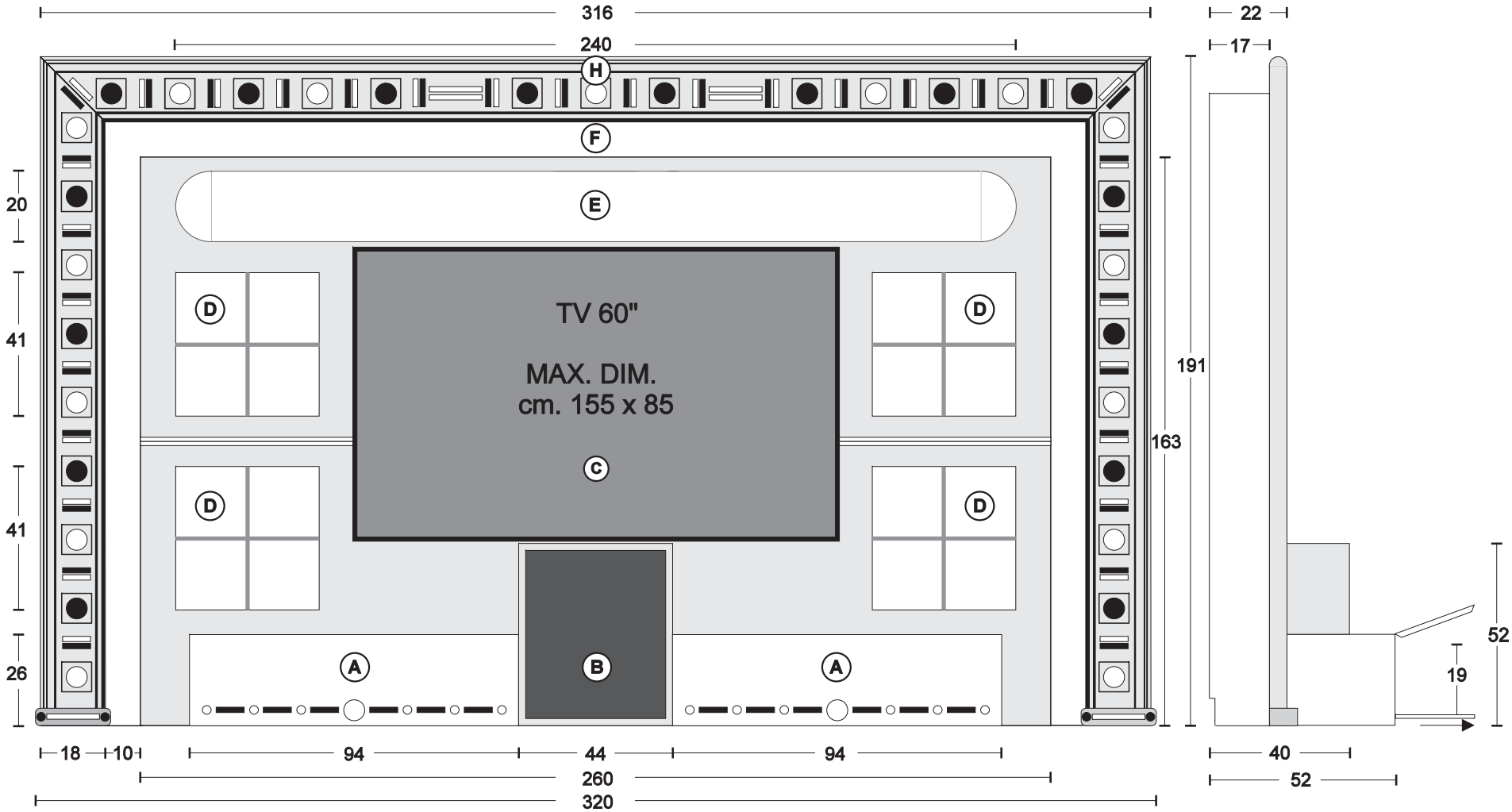

B+C	ORO FOGLIA (gold foil)	A+D+E+F	METALBLACK	H	ORO FOGLIA con formelle di **Murano** NERO+ROSSO GOLD FOIL with tiles of **Murano** glass BLACK+RED Decorazioni nero/argento foglia-black/silver foil decorations	**€ 16.875,10**
B+C	ARGENTO FOGLIA (silver foil)	A+D+E+F	METALBLACK	H	ARGENTO FOGLIA con formelle di **Murano** NERO+BIANCO SILVER FOIL with tiles of **Murano** glass BLACK+WHITE Decorazioni nero/argento foglia-black/silver foil decorations	**€ 16.875,10**
B+C	ARGENTO FOGLIA (silver foil)	A+D+E+F	Bianco/Nero opaco Opaque White/Black	H	Bianco/Nero Lucido - con formelle di **Murano** NERO o BIANCO Gloss White/Black - with tiles of **Murano** glass BLACK or WHITE Decorazioni nero/argento foglia-black/silver foil decorations	**€ 17.963,00**

THE FRAME HOME CINEMA - GLASS EYES

Struttura per Home Cinema - a parete (con luci retro-pannello diffuse)
Home Cinema - Wall Rack (with spreading back-panel lighting)

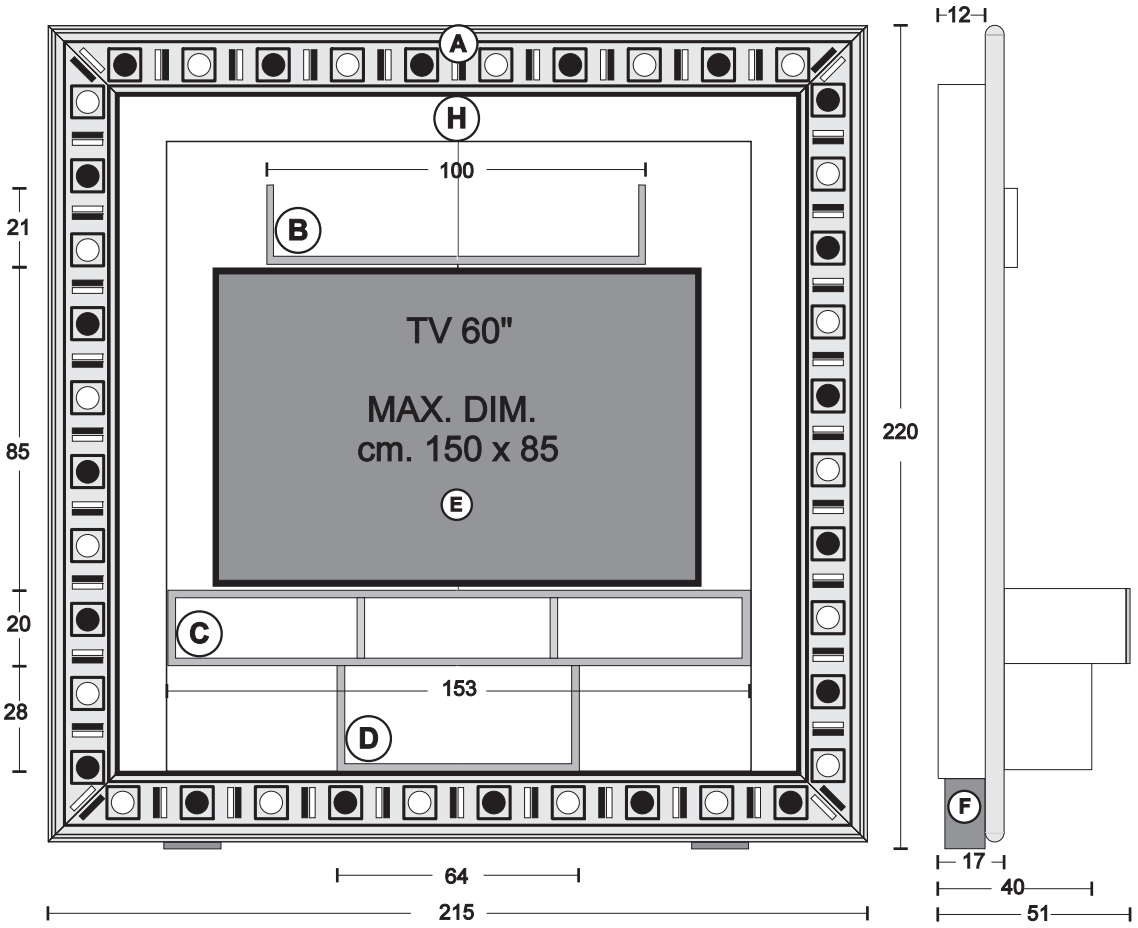

Finiture e combinazioni - Finishings and combinations

C ORO FOGLIA (gold foil) H METALGOLD	A Oro Foglia con formelle di **Murano** Nero+Rosso Goldfoil with tiles of **Murano** glass Black+Red (decorazioni Nero-Black decorations-Schwarze Decorationen)	B+D+E+F METALBLACK	**€ 11.214,50**
C ARGENTO FOGLIA (silver foil) H METALSILVER	A Argento foglia con formelle di **Murano** Nero+Bianco Silverfoil with tiles of **Murano** glass Black+White (decorazioni Nero-Black decorations-Schwarze Decorationen)	B+D+E+F METALBLACK	**€ 11.214,50**
C NERO LUCIDO (Gloss Black) H METALSILVER	A Nero lucido con formelle di **Murano** Bianco Gloss Black with tiles of **Murano** glass White (decorazioni argento foglia-silver foil decorations-silberfolie Decorationen)	B+D+E+F NERO Black	**€ 11.994,40**
C BIANCO LUCIDO (Gloss white) H METALSILVER	A Bianco lucido con formelle di **Murano** Nero Gloss white with tiles of **Murano** glass Black (decorazioni argento foglia-silver foil decorations-silberfolie Decorationen)	B+D+E+F BIANCO White	**€ 11.994,40**

THE FRAME CONTAINER-BAR - GLASS EYES

Mobile con scaffali a giorno e ante scorrevoli - a parete (con led bianchi sotto piani orizzontali) ① ② ③ ④
Open wall-container, with sliding doors- Horizontal shelves enlightened by white LEDs ① ② ③ ④

-Sezione
-Section

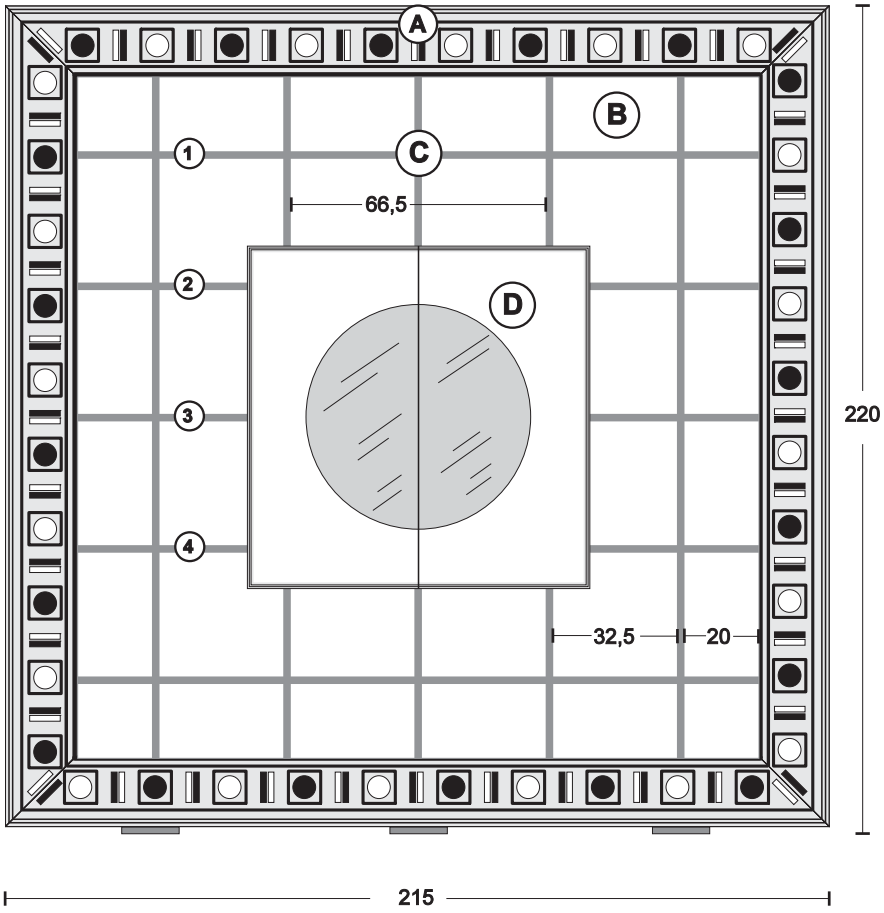

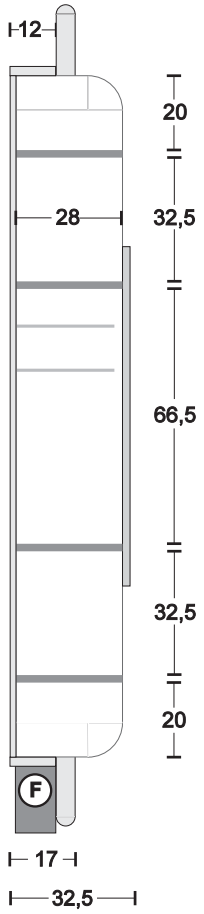

Finiture e combinazioni - Finishings and combinations

(A) Oro Foglia con formelle di **Murano** Nero+Rosso Goldfoil with tiles of **Murano** glass Black+Red (decorazioni Nero-Black decorations)	(B) ORO FOGLIA (gold foil)	(C)+(F)+(D) METALBLACK	**€ 14.839,00**
(A) Argento foglia con formelle di **Murano** Nero+Bianco Silverfoil with tiles of **Murano** glass Black+White (decorazioni Nero-Black decorations	(B) ARGEN. FOGLIA (silver foil)	(C)+(F)+(D) METALBLACK	**€ 14.839,00**
(A) Bianco Lucido con formelle di **Murano** Nero Gloss White with tiles of **Murano** glass Black (decorazioni argento foglia-silver foil decorations)	(B) ARGEN. FOGLIA (silver foil)	(C)+(F) BIANCO (white) (D) BIANCO LUCIDO (gloss-white)	**€ 15.593,60**
(A) Nero Lucido con formelle di **Murano** Bianco Gloss Black with tiles of **Murano** glass White (decorazioni argento foglia-silver foil decorations	(B) ARG. FOGLIA (silver foil)	(C)+(F) NERO (black-Schwarze) (D) NERO LUCIDO (gloss black)	**€ 15.593,60**

THE FRAME "BIG MIRROR" - GLASS EYES

Specchio a parete completo di consolle a 2 cassetti e vano a giorno - led bianchi perimetrali - bolle perimetrali su specchio
Wall-mirror with 2-drawer-consolle and open compartment- white leds on perimeter- bubbles on mirror border

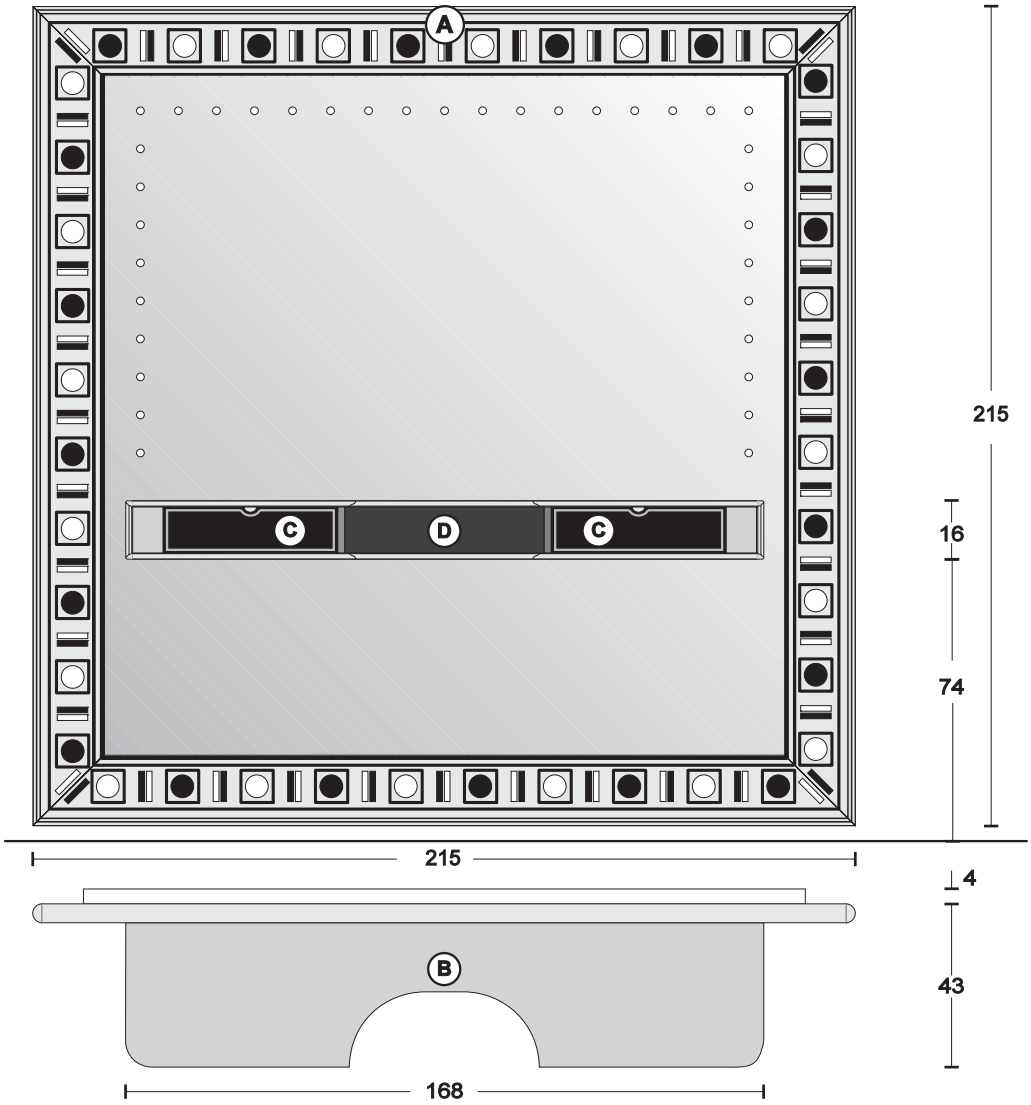

Finiture e combinazioni - Finishings and combinations

A Oro Foglia con formelle di **Murano** Nero+Rosso Goldfoil with tiles of **Murano** glass Black+Red (decorazioni Nero-Black decorations)	B ORO FOGLIA (gold foil)	C+D	METALBLACK	**€ 10.096,90**
A Argento foglia con formelle di **Murano** Nero+Bianco Silverfoil with tiles of **Murano** glass Black+White (decorazioni Nero-Black decorations)	B ARGEN. FOGLIA (silver foil)	C+D	METALBLACK	**€ 10.096,90**
A Bianco Lucido con formelle di **Murano** Nero Gloss White with tiles of **Murano** glass Black (decorazioni argento foglia-silver foil decorations)	B ARGEN. FOGLIA (silver foil)	C D	BIANCO (white) BIANCO LUCIDO (gloss-white)	**€ 10.584,20**
A Nero Lucido con formelle di **Murano** Bianco Gloss Black with tiles of **Murano** glass White (decorazioni argento foglia-silver foil decorations)	B ARG. FOGLIA (silver foil)	C D	NERO (black) NERO LUCIDO (gloss black)	**€ 10.584,20**

STAR GATE - GLASS EYES

Struttura per Home Cinema - a parete (con luci retro-pannello diffuse)
Home Cinema - Wall Rack (with spreading back-panel lighting)

-Sezione
-Section

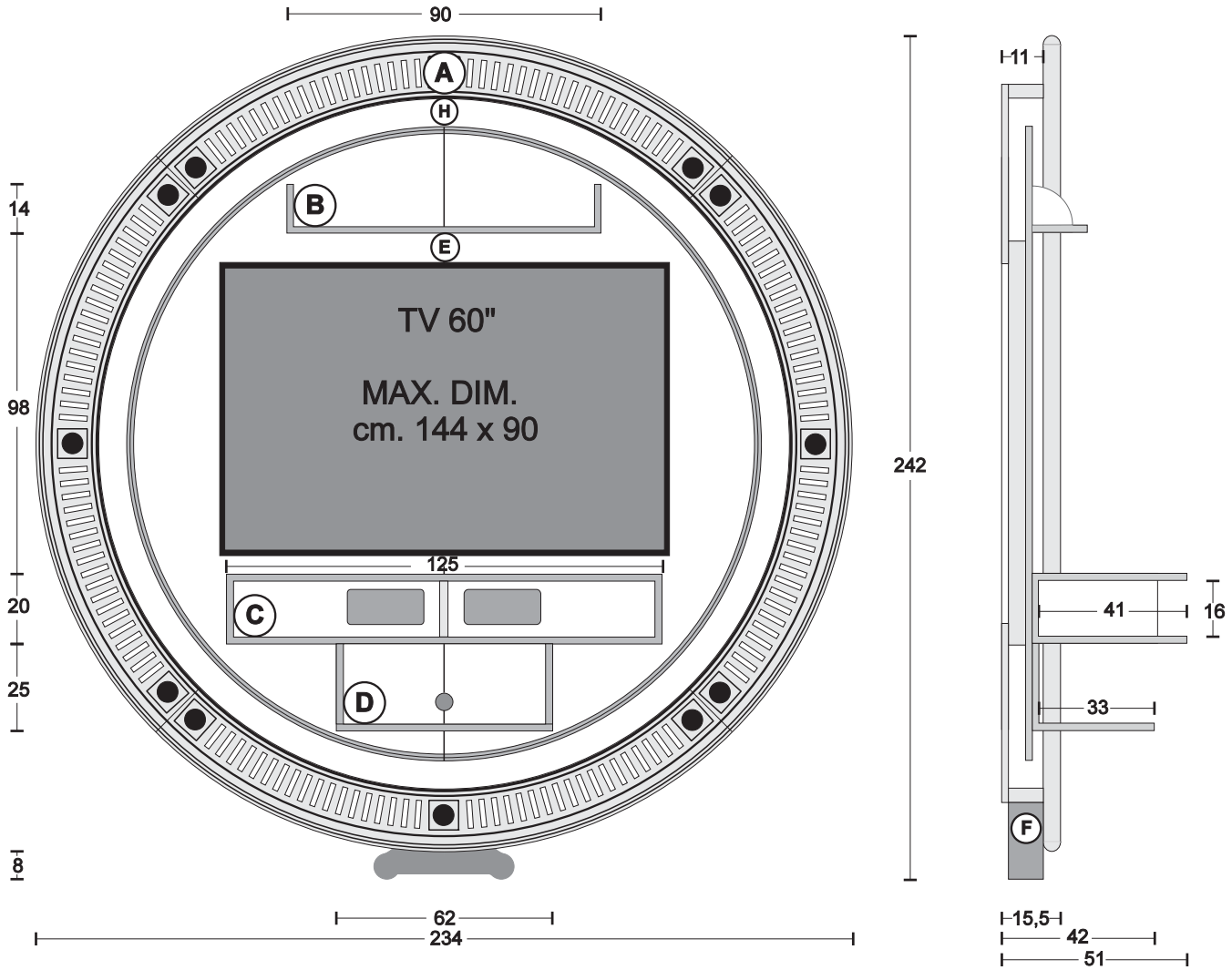

Finiture e combinazioni - Finishings and combinations

(C) ORO FOGLIA (gold foil) (H) METALGOLD	(A) Oro Foglia con formelle di **Murano** Nero+Rosso Goldfoil with tiles of **Murano** glass Black+Red (decorazioni Nero-Black decorations)	(B)+(D)+(E)+(F) METALBLACK	**€ 14.004,10**
(C) ARGENTO FOGLIA (silver foil) (H) METALSILVER	(A) Argento foglia con formelle di **Murano** Nero+Bianco Silverfoil with tiles of **Murano** glass Black+White (decorazioni Nero-Black decorations)	(B)+(D)+(E)+(F) METALBLACK	**€ 14.004,10**
(C) ARGENTO FOGLIA (Silver Foil) (H) METALSILVER	(A) Nero lucido con formelle di **Murano** Bianco Gloss Black with tiles of **Murano** glass White (decorazioni argento foglia-silver foil decorations)	(B)+(D)+(E)+(F) NERO Black	**€ 14.769,70**
(C) ARGENTO FOGLIA (Silver Foil) (H) METALSILVER	(A) Bianco lucido con formelle di **Murano** Nero Gloss white with tiles of **Murano** glass Black (decorazioni argento foglia-silver foil decorations)	(B)+(D)+(E)+(F) BIANCO White	**€ 14.769,70**

STAR GATE CONTAINER-BAR - GLASS EYES

Mobile con scaffali a giorno e ante scorrevoli - a parete (con led bianchi sotto piani orizzontali) ①②③④
Open wall-container, with sliding doors- Horizontal shelves enlightened by white LEDs ①②③④

-Sezione
-Section

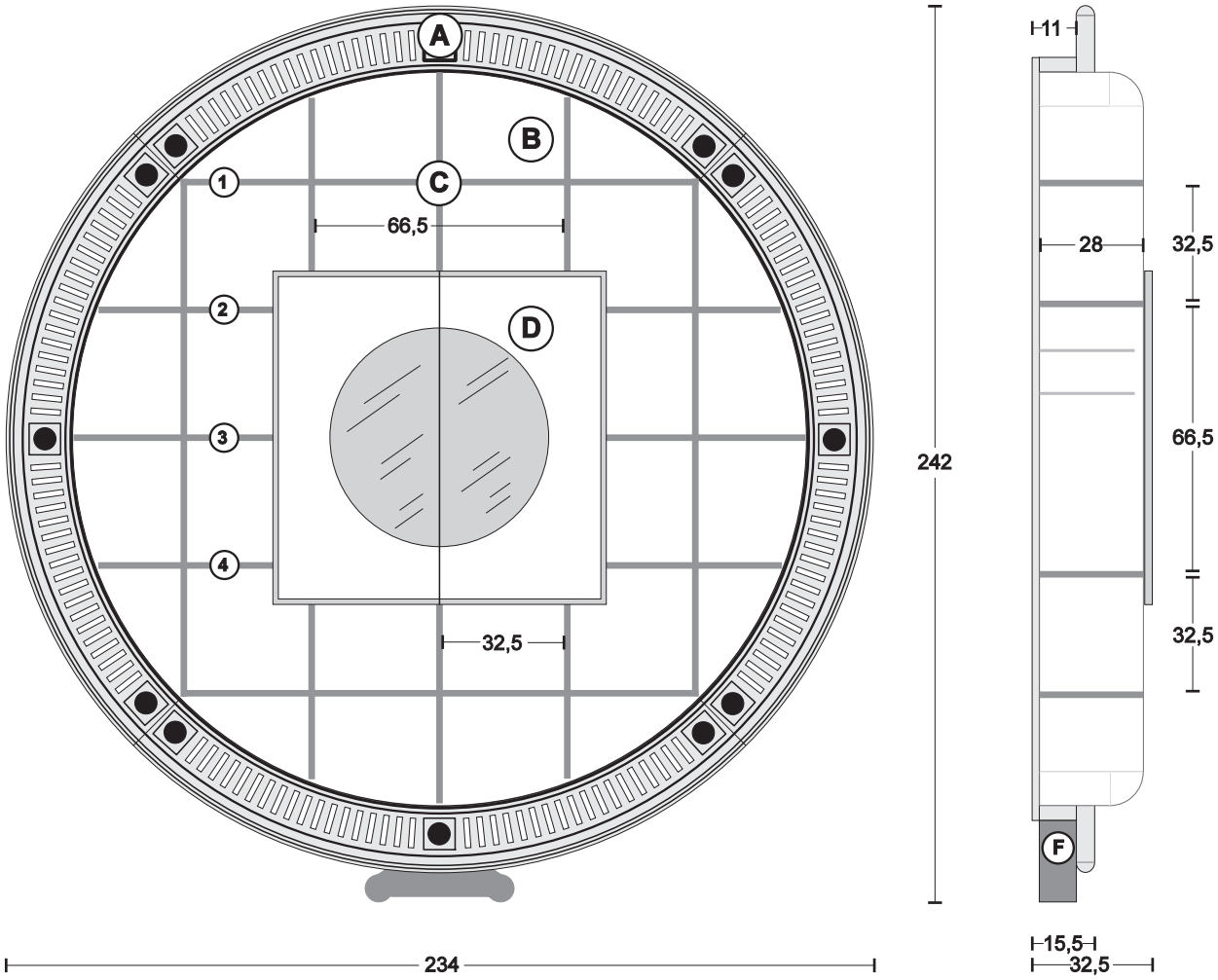

Finiture e combinazioni - Finishings and combinations

(A) Oro Foglia con formelle di **Murano** Nero+Rosso Goldfoil with tiles of **Murano** glass Black+Red (decorazioni Nero-Black decorations)	(B) ORO FOGLIA (gold foil)	(C)+(F)+(D) METALBLACK	**€ 17.627,50**
(A) Argento foglia con formelle di **Murano** Nero+Bianco Silverfoil with tiles of **Murano** glass Black+White (decorazioni Nero-Black decorations)	(B) ARGEN. FOGLIA (silver foil)	(C)+(F)+(D) METALBLACK	**€ 17.627,50**
(A) Bianco Lucido con formelle di **Murano** Nero Gloss White with tiles of **Murano** glass Black (decorazioni argento foglia-silver foil decorations)	(B) ARGEN. FOGLIA (silver foil)	(C)+(F) BIANCO (white) (D) BIANCO LUCIDO (gloss-white)	**€ 18.367,80**
(A) Nero Lucido con formelle di **Murano** Bianco Gloss Black with tiles of **Murano** glass White (decorazioni argento foglia-silver foil decorations)	(B) ARG. FOGLIA (silver foil)	(C)+(F) NERO (black) (D) NERO LUCIDO (gloss black)	**€ 18.367,80**

STAR GATE "BIG MIRROR" - GLASS EYES

Specchio a parete completo di consolle a 2 cassetti e vano a giorno - led bianchi perimetrali - bolle perimetrali su specchio
Wall-mirror with 2-drawer-consolle and open compartment- white leds on perimeter- bubbles on mirror border

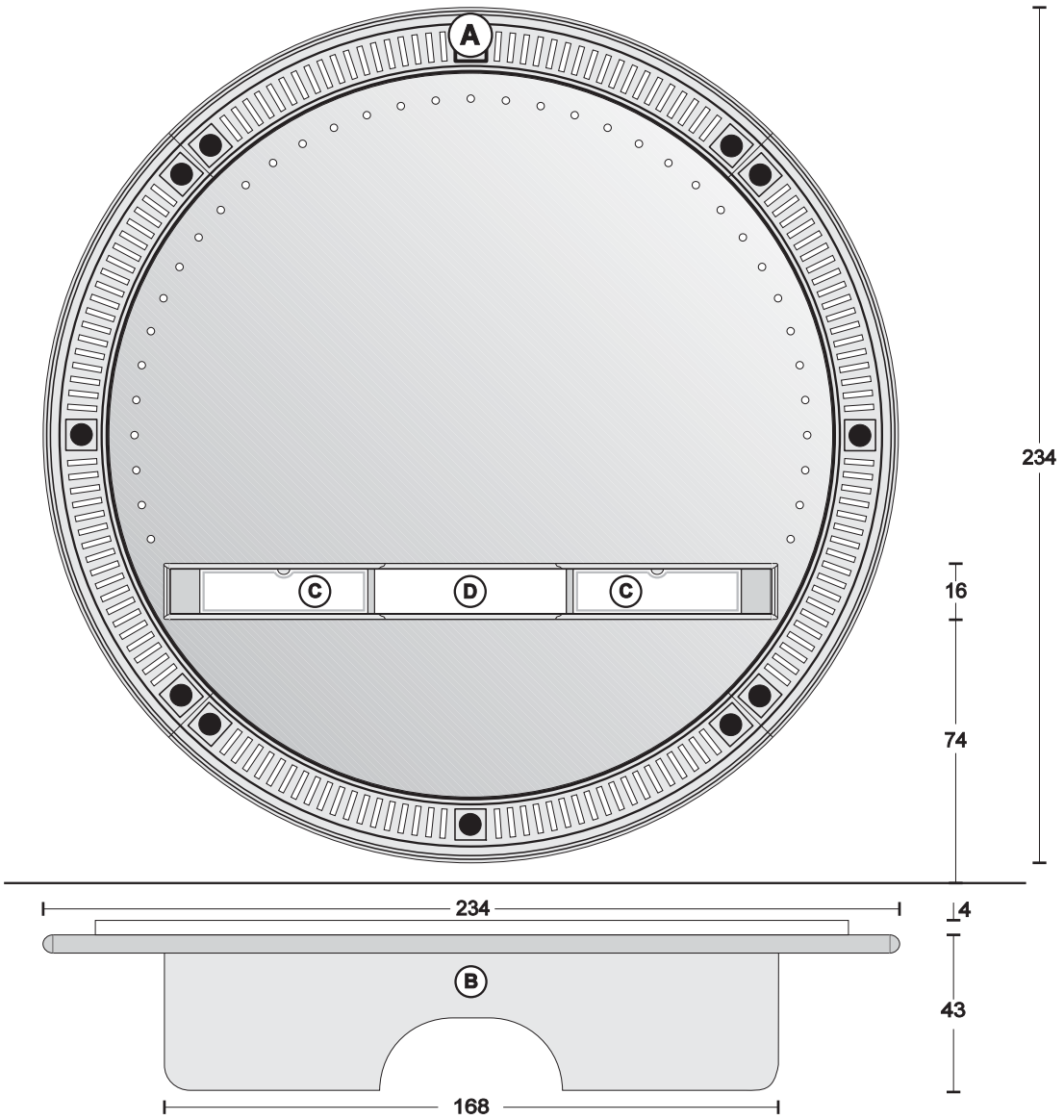

Finiture e combinazioni - Finishings and combinations

A Oro Foglia con formelle di **Murano** Nero+Rosso Goldfoil with tiles of **Murano** glass Black+Red (decorazioni Nero-Black decorations)	B ORO FOGLIA (gold foil	C+D	METALBLACK	€ 11.100,10
A Argento foglia con formelle di **Murano** Nero+Bianco Silverfoil with tiles of **Murano** glass Black+White (decorazioni Nero-Black decorations)	B ARGEN. FOGLIA (silver foil)	C+D	METALBLACK	€ 11.100,10
A Bianco Lucido con formelle di **Murano** Nero Gloss White with tiles of **Murano** glass Black (decorazioni argento foglia-silver foil decorations)	B ARGEN. FOGLIA (silver foil)	C	BIANCO (white)	€ 11.827,20
		D	BIANCO LUCIDO (gloss-white)	
A Nero Lucido con formelle di **Murano** Bianco Gloss Black with tiles of **Murano** glass White (decorazioni argento foglia-silver foil decorations)	B ARG. FOGLIA (silver foil)	C	NERO (black)	€ 11.827,20
		D	NERO LUCIDO (gloss black)	

FRAME - 214 GLASS EYES-MIRROR

SPECCHIERA A PARETE-WALL MIRROR

cornice - frame **€ 5.306,40**
ORO/ARGENTO FOGLIA-GOLD/SILVER FOIL
con formelle di **Murano** (Nero+Rosso-oro)(Nero+bianco-argento)
with tiles of **Murano** glass (Black+Red-gold)(Black+White-Silver)
(decorazioni Nero-Black decorations)

cornice - frame **€ 5.677,10**
- BIANCO/NERO LUCIDO-Gloss White/Black
con formelle di **Murano** NERO o BIANCO
with tiles of **Murano** glass BLACK or WHITE

(decorazioni argento foglia-silver foil decorations)
(interno-inside - Nero/Bianco-Black/White)

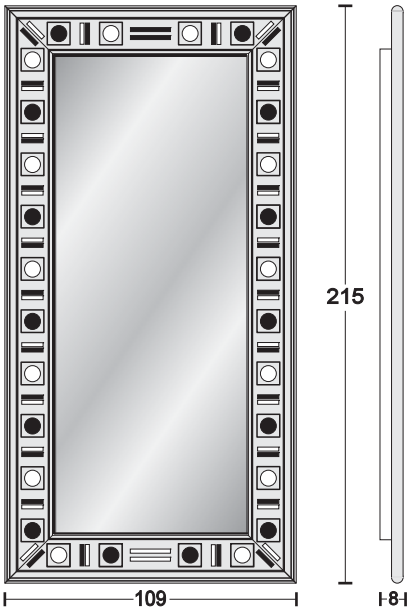

FRAME - 214 GLASS EYES-SOLO FRAME

SOLO CORNICE-JUST FRAME

cornice - frame **€ 4.953,30**
ORO/ARGENTO FOGLIA-GOLD/SILVER FOIL
con formelle di **Murano** (Nero+Rosso-oro)(Nero+bianco-argento)
with tiles of **Murano** glass (Black+Red-gold)(Black+White-Silver)
(decorazioni Nero-Black decorations)

cornice - frame **€ 5.327,30**
- BIANCO/NERO LUCIDO-Gloss White/Black
con formelle di **Murano** NERO o BIANCO
with tiles of **Murano** glass BLACK or WHITE

(decorazioni argento foglia-silver foil decorations)
(interno-inside-innenseite - Nero/Bianco-Black/White)

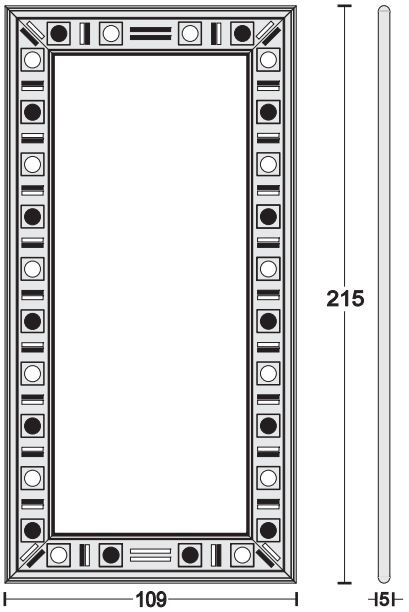

BODY ROUND LIGHT-GLASS EYES

Corpo illuminante a parete - Wall Body light

cornice - frame **€ 4.852,10**
ORO/ARGENTO FOGLIA-GOLD/SILVER FOIL
con formelle di **Murano** (Nero+Rosso-Oro)(Nero+Bianco-Argento)
with tiles of **Murano** glass (Black+Red-Gold)(Black+White-Silver)

(decorazioni Nero-Black decorations)

cornice - frame **€ 4.990,70**
- BIANCO/NERO LUCIDO-Gloss White/Black
con formelle di **Murano** NERO o BIANCO
with tiles of **Murano** glass BLACK or WHITE

(decorazioni argento foglia-silver foil decorations)

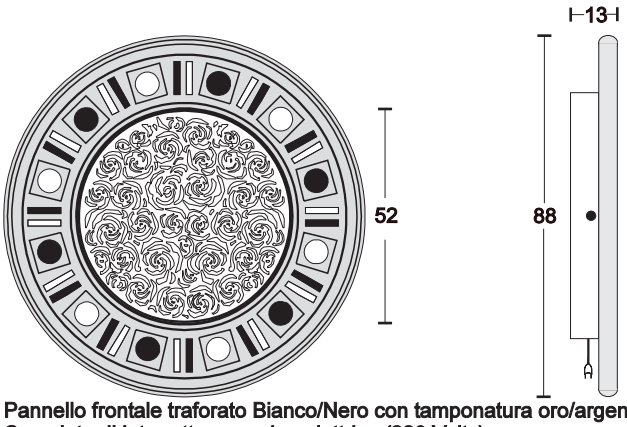

Pannello frontale traforato Bianco/Nero con tamponatura oro/argento foglia
Completo di interruttore e spina elettrica (220 Volts)
Frontal board in White/Black colour with gold or silver foil shadings
provided with switch and plug (220 volts)

BODY ROUND MIRROR-GLASS EYES

Specchiera a parete-Wall Mirror

cornice - frame **€ 3.681,70**
ORO/ARGENTO FOGLIA-GOLD/SILVER FOIL
con formelle di **Murano** (Nero+Rosso-Oro)(Nero+Bianco-Argento)
with tiles of **Murano** glass (Black+Red-Gold)(Black+White-Silver)

(decorazioni Nero-Black decorations)

cornice - frame **€ 3.820,30**
- BIANCO/NERO LUCIDO-Gloss White/Black
con formelle di **Murano** NERO o BIANCO
with tiles of **Murano** glass BLACK or WHITE

(decorazioni argento foglia-silver foil decorations)

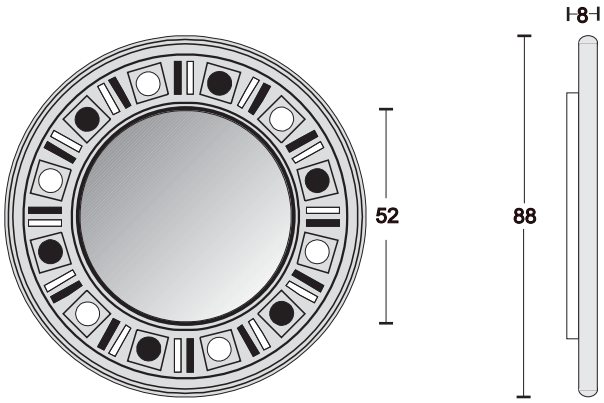

FRAME - 120 GLASS EYES

Elemento porta CD-DVD a parete
Wall CD-DVD rack

cornice - frame: **€ 4.174,50**
- ORO FOGLIA-GOLD FOIL
con formelle di **Murano** NERO+ROSSO
with tiles of **Murano** glass BLACK+RED

(decorazioni Nero-Black decorations)
(interno-inside:METALBLACK)

cornice - frame: **€ 4.174,50**
- ARGENTO FOGLIA-SILVER FOIL
con formelle di **Murano** NERO+ROSSO
with tiles of **Murano** glass BLACK+RED

(decorazioni Nero-Black decorations)
(interno-inside:METALBLACK)

cornice - frame: **€ 4.436,30**
- BIANCO/NERO LUCIDO-Gloss White/Black
con formelle di **Murano** NERO o BIANCO
with tiles of **Murano** glass BLACK or WHITE

(decorazioni argento foglia-silver foil decorations)
(interno-inside:Nero/Bianco-Black/White)

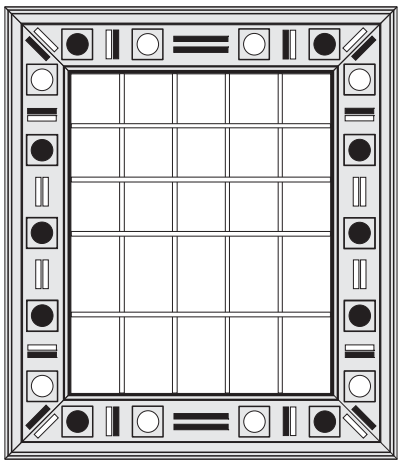

art.: F12-3C3V
234 CD + 90 DVD

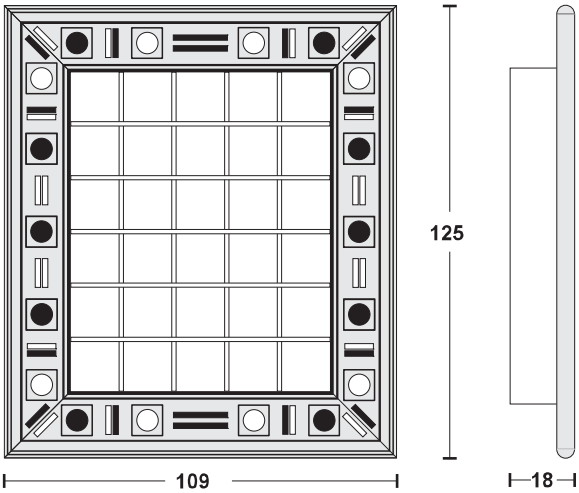

art.: F12-6C
390 CD

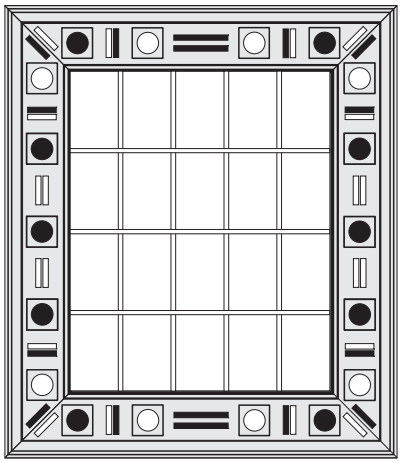

art.:.F12-4V
180 DVD

FRAME 120 GLASS EYES-MIRROR

Specchiera a parete - Wall Mirror

cornice - frame: **€ 3.767,50**
- ORO FOGLIA-con formelle di **Murano** NERO+ROSSO
- ARGENTO FOGLIA-con formelle di **Murano** NERO+BIANCO
- GOLD FOIL- with tiles of **Murano** glass BLACK+RED
- SILVER FOIL-with tiles of **Murano** glass BLACK+WHITE
(decorazioni Nero-Black decorations)

cornice - frame: **€ 4.032,60**
- BIANCO/NERO LUCIDO-Gloss White/Black
con formelle di **Murano** NERO o BIANCO
with tiles of **Murano** glass BLACK or WHITE
(decorazioni argento foglia-silver foil decorations)

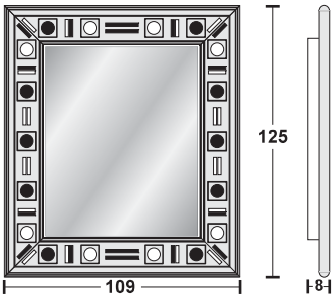

FRAME 120 GLASS EYES-SOLO FRAME

Solo cornice - Just Frame

cornice - frame: **€ 3.489,20**
- ORO FOGLIA-con formelle di **Murano** NERO+ROSSO
- ARGENTO FOGLIA-con formelle di **Murano** NERO+BIANCO
- GOLD FOIL- with tiles of **Murano** glass BLACK+RED
- SILVER FOIL-with tiles of **Murano** glass BLACK+WHITE
(decorazioni Nero-Black decorations)

cornice - frame: **€ 3.751,00**
- BIANCO/NERO LUCIDO-Gloss White/Black
con formelle di **Murano** NERO o BIANCO
with tiles of **Murano** glass BLACK or WHITE
(decorazioni argento foglia-silver foil decorations)

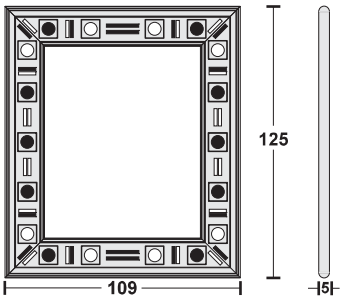

FRAME - 214 GLASS EYES

Elemento porta CD-DVD a parete
Wall CD-DVD rack

cornice - frame: **€ 6.780,40**
- ORO FOGLIA-GOLD FOIL
con formelle di **Murano** NERO+ROSSO
with tiles of **Murano** glass BLACK+RED
(decorazioni Nero-Black decorations)
(interno-inside:METALBLACK)

cornice - frame: **€ 6.780,40**
- ARGENTO FOGLIA-SILVER FOIL
con formelle di **Murano** NERO+BIANCO
with tiles of **Murano** glass BLACK+WHITE
(decorazioni Nero-Black decorations)
(interno-inside:METALBLACK)

cornice - frame: **€ 6.959,70**
- BIANCO/NERO LUCIDO-Gloss White/Black
con formelle di **Murano** NERO o BIANCO
with tiles of **Murano** glass BLACK or WHITE
(decorazioni argento foglia-silver foil decorations)
(interno-inside:Nero/Bianco-Black/White)

art. F214-12C
780 CD

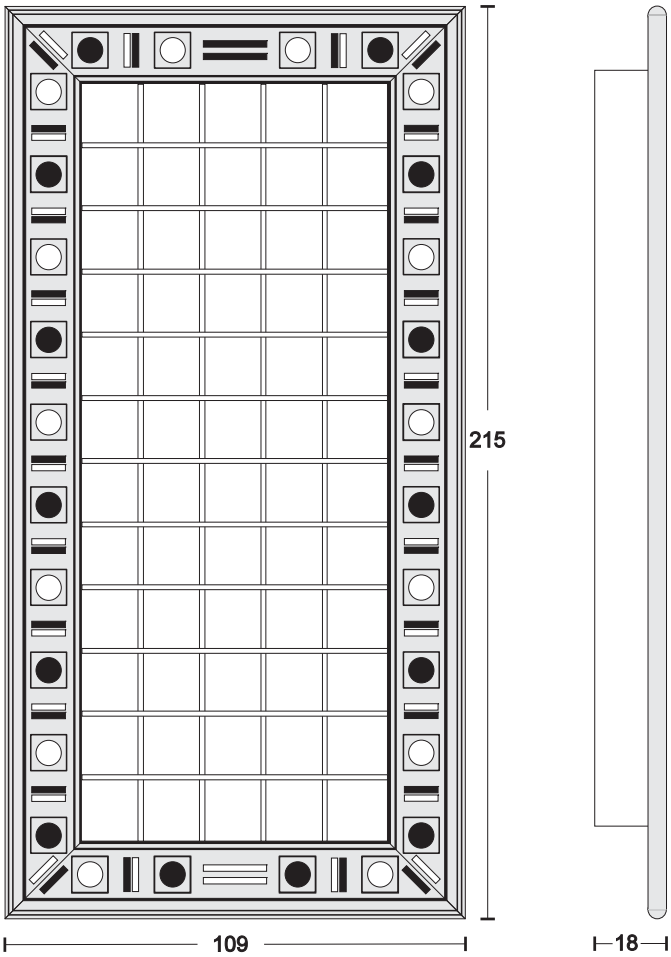

art. F214-9C2V
585 CD+90 DVD

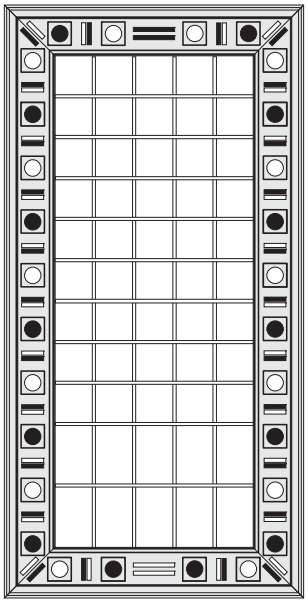

art. F214-6C4V
390 CD+180 DVD

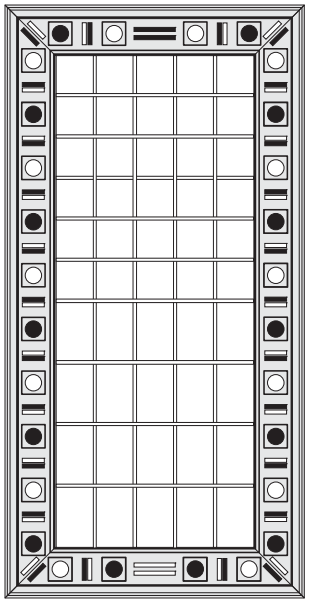

art. F214-3C6V
234 CD+270 DVD

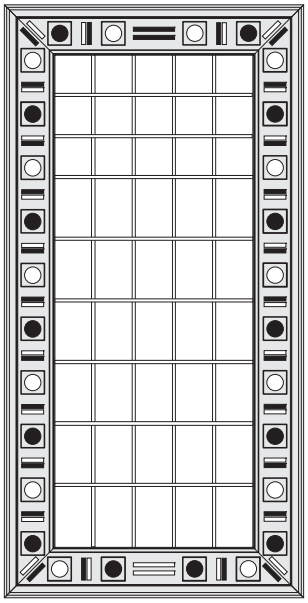

art. F214-8V
360 DVD

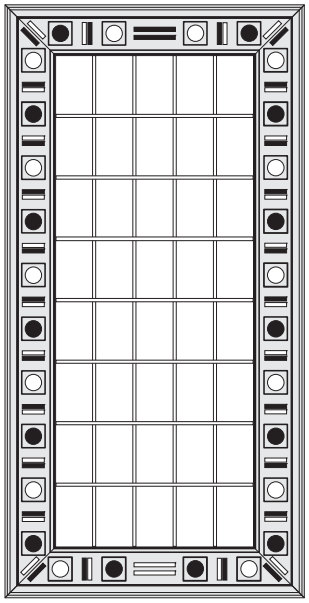

BODY LIGHT - GLASS EYES

Corpo illuminante a parete
Wall Body-light

Completo di interruttore e spina elettrica (220 Volts)
provided with switch and plug (220 volts)

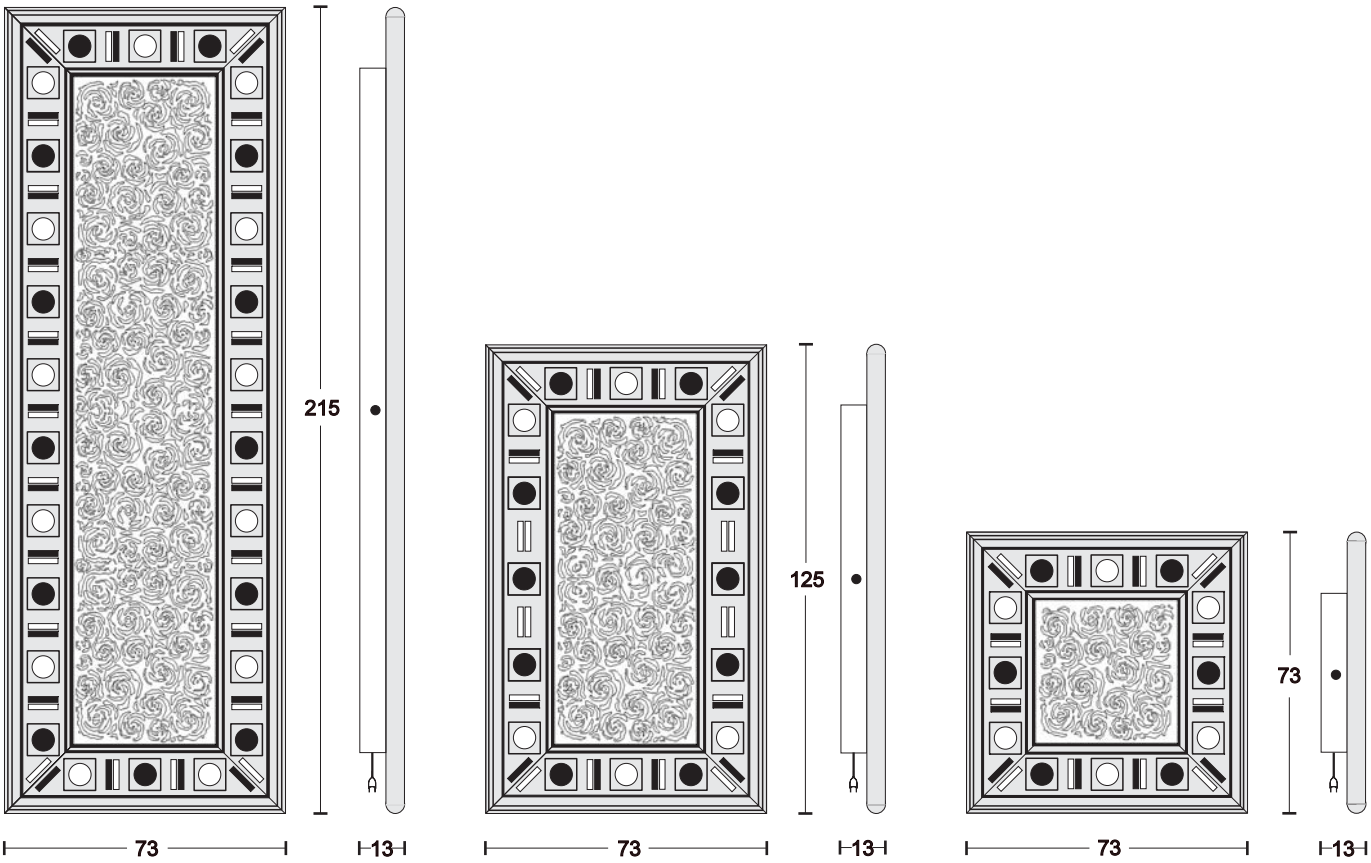

BODY LIGHT 214-GLASS EYES	BODY LIGHT 120-GLASS EYES	BODY LIGHT 80-GLASS EYES
cornice - frame: **€ 6.745,20** ORO FOGLIA-GOLD FOIL con formelle di **Murano** NERO+ROSSO with tiles of **Murano** glass BLACK+RED (decorazioni Nero-Black decorations)	cornice - frame: **€ 4.757,50** ORO FOGLIA-GOLD FOIL con formelle di **Murano** NERO+ROSSO with tiles of **Murano** glass BLACK+RED (decorazioni Nero-Black decorations)	cornice - frame: **€ 3.043,70** ORO FOGLIA-GOLD FOIL con formelle di **Murano** NERO+ROSSO with tiles of **Murano** glass BLACK+RED (decorazioni Nero-Black decorations)
cornice - frame: **€ 6.745,20** ARGENTO FOGLIA-SILVER FOIL con formelle di **Murano** NERO+BIANCO with tiles of **Murano** glass BLACK+WHITE (decorazioni Nero-Black decorations)	cornice - frame: **€ 4.757,50** ARGENTO FOGLIA-SILVER FOIL con formelle di **Murano** NERO+BIANCO with tiles of **Murano** glass BLACK+WHITE (decorazioni Nero-Black decorations)	cornice - frame **€ 3.043,70** ARGENTO FOGLIA-SILVER FOIL con formelle di **Murano** NERO+BIANCO with tiles of **Murano** glass BLACK+WHITE (decorazioni Nero-Black decorations)
cornice - frame: **€ 7.098,30** BIANCO/NERO LUCIDO-Gloss White/Black con formelle di **Murano** NERO o BIANCO with tiles of **Murano** glass BLACK or WHITE (decorazioni argento foglia-silver foil decorations)	cornice - frame: **€ 4.980,80** BIANCO/NERO LUCIDO-Gloss White/Black con formelle di **Murano** NERO o BIANCO with tiles of **Murano** glass BLACK or WHITE (decorazioni argento foglia-silver foil decorations)	cornice - frame: **€ 3.122,90** BIANCO/NERO LUCIDO-Gloss White/Black con formelle di **Murano** NERO o BIANCO with tiles of **Murano** glass BLACK or WHITE (decorazioni argento foglia-silver foil decorations)
Pannello frontale traforato color Nero o Bianco con tamponatura oro o argento foglia Frontal board in black or white colour with gold or silver foil shadings	Pannello frontale traforato color Nero o Bianco con tamponatura oro o argento foglia Frontal board in black or white colour with gold or silver foil shadings	Pannello frontale traforato color Nero o Bianco con tamponatura oro o argento foglia Frontal board in black or white colour with gold or silver foil shadings

BODY MIRROR - GLASS EYES

SPECCHIERA A PARETE
WALL MIRROR

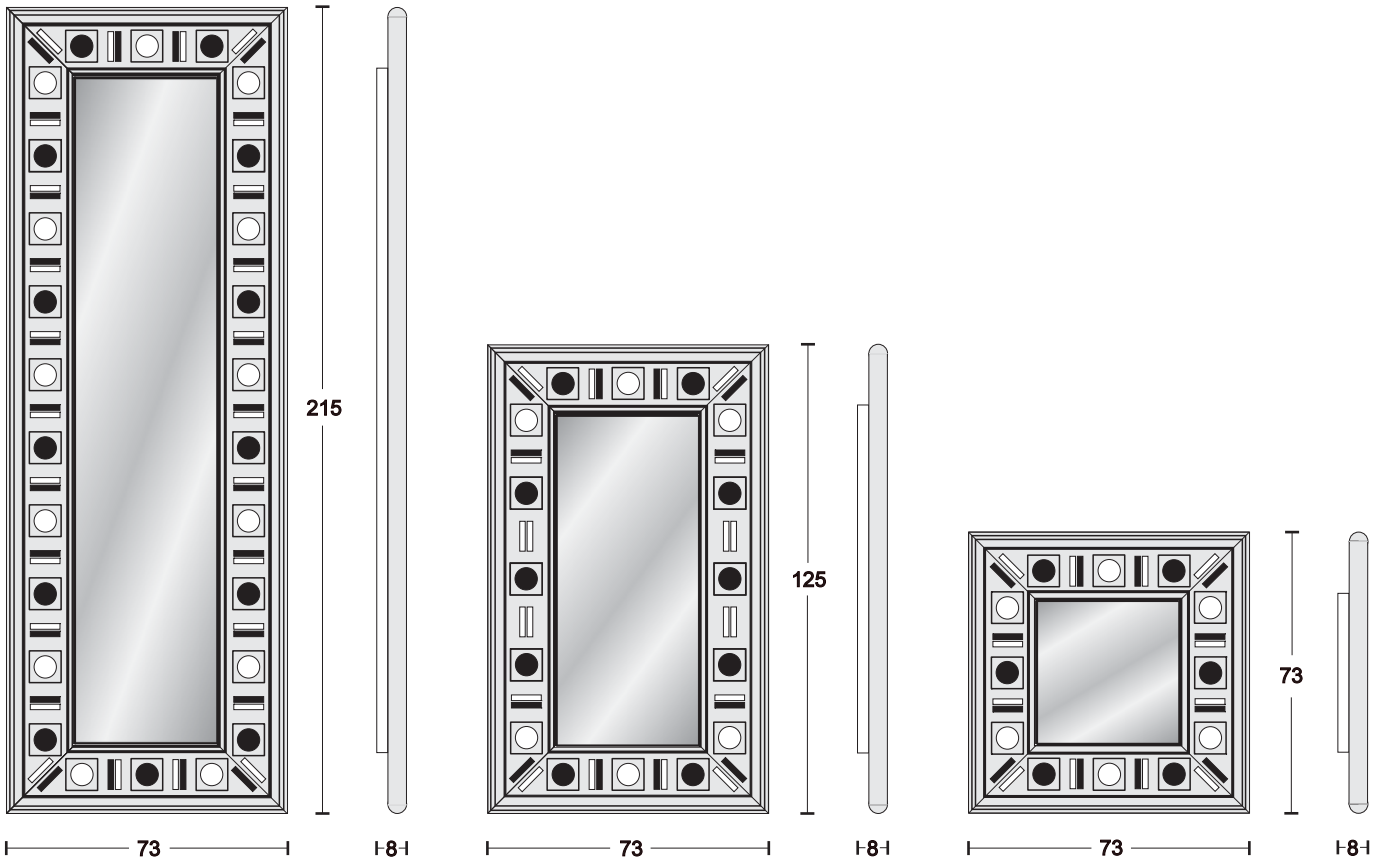

BODY MIRROR 214-GLASS EYES	BODY MIRROR 120-GLASS EYES	BODY MIRROR 80-GLASS EYES
Specchiera a parete-Wall Mirror	Specchiera a parete-Wall Mirror	Specchiera a parete-Wall Mirror
cornice - frame: **€ 5.186,50** ORO FOGLIA-GOLD FOIL con formelle di **Murano** NERO+ROSSO with tiles of **Murano** glass BLACK+RED (decorazioni Nero-Black decorations)	cornice - frame: **€ 3.634,40** ORO FOGLIA-GOLD FOIL con formelle di **Murano** NERO+ROSSO with tiles of **Murano** glass BLACK+RED (decorazioni Nero-Black decorations)	cornice - frame: **€ 2.577,30** ORO FOGLIA-GOLD FOIL con formelle di **Murano** NERO+ROSSO with tiles of **Murano** glass BLACK+RED (decorazioni Nero-Black decorations)
cornice - frame: **€ 5.186,50** ARGENTO FOGLIA-SILVER FOIL con formelle di **Murano** NERO+BIANCO with tiles of **Murano** glass BLACK+WHITE (decorazioni Nero-Black decorations)	cornice - frame: **€ 3.634,40** ARGENTO FOGLIA-SILVER FOIL con formelle di **Murano** NERO+BIANCO with tiles of **Murano** glass BLACK+WHITE (decorazioni Nero-Black decorations)	cornice - frame: **€ 2.577,30** ARGENTO FOGLIA-SILVER FOIL con formelle di **Murano** NERO+BIANCO with tiles of **Murano** glass BLACK+WHITE (decorazioni Nero-Black decorations)
cornice - frame: **€ 5.523,10** BIANCO/NERO LUCIDO-Gloss White/Black con formelle di **Murano** NERO o BIANCO with tiles of **Murano** glass BLACK or WHITE (decorazioni argento foglia-silver foil decorations)	cornice - frame: **€ 3.848,90** BIANCO/NERO LUCIDO-Gloss White/Black con formelle di **Murano** NERO o BIANCO with tiles of **Murano** glass BLACK or WHITE (decorazioni argento foglia-silver foil decorations)	cornice - frame: **€ 2.648,80** BIANCO/NERO LUCIDO-Gloss White/Black con formelle di **Murano** NERO o BIANCO with tiles of **Murano** glass BLACK or WHITE (decorazioni argento foglia-silver foil decorations)

SHINING SUN - GLASS EYES

Corpo illuminante a parete - Wall Body light

cornice-frame: Oro foglia-Gold foil **€ 6.179,80**
con formelle di **Murano** NERO+ROSSO
with tiles of **Murano** glass BLACK+RED

cornice-frame:Argento foglia-Silver foil **€ 6.179,80**
con formelle di **Murano** NERO+BIANCO
with tiles of **Murano** glass BLACK+WHITE

cornice - frame:BIANCO/NERO LUCIDO **€ 6.388,80**
Gloss White/Black
con formelle di **Murano** NERO o BIANCO
with tiles of **Murano** glass BLACK or WHITE
(decorazioni argento foglia-silver foil decorations)

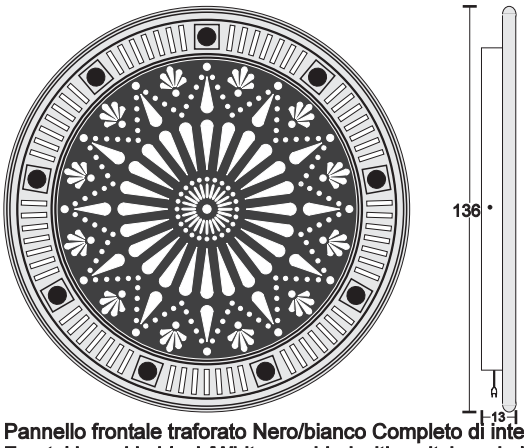

SHINING SUN - GLASS EYES-mirror

Specchiera a parete - Wall Mirror

cornice-frame: Oro foglia-Gold foil **€ 4.450,60**
con formelle di **Murano** NERO+ROSSO
with tiles of **Murano** glass BLACK+RED

cornice-frame:Argento foglia-Silver foil **€ 4.450,60**
con formelle di **Murano** NERO+BIANCO
with tiles of **Murano** glass BLACK+WHITE

cornice - frame:BIANCO/NERO LUCIDO **€ 4.660,70**
Gloss White/Black
con formelle di **Murano** NERO o BIANCO
with tiles of **Murano** glass BLACK or WHITE
(decorazioni argento foglia-silver foil decorations)

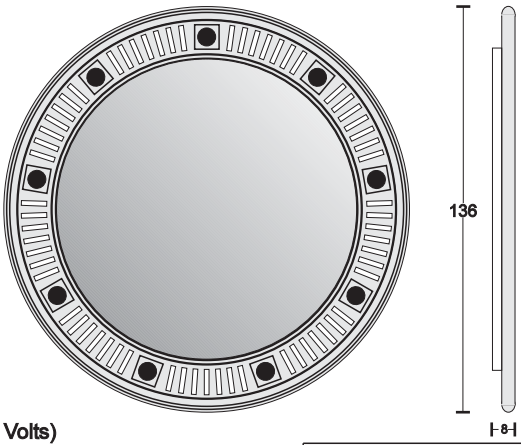

Pannello frontale traforato Nero/bianco Completo di interruttore - spina (220 Volts)
Frontal board in black/White provided with switch and plug (220 volts)

SITTING CASE - GLASS EYES

Cassapanca - Sitting case
Struttura ORO/ARGENTO FOGLIA. Pannelli frontali traforati colore nero con bassofondo **€ 6.596,70**
e bassorilievi Oro/Argento foglia. Piano chiusura METALBLACK, completo di ammortizzatori.
Structure GOLD/SILVER FOIL. Black frontal panel
with GOLD/SILVER foil background and bas-relief,. Opening top METALBLACK with Shock absorber
ORO/ARGENTO FOGLIA con formelle di **Murano** NERO+ROSSO o NERO+BIANCO
GOLD/SILVER FOIL with tiles of **Murano** glass BLACK+RED or BLACK+WHITE

Struttura-Structure: Bianco/Nero Lucido-gloss White/black **€ 6.805,70**
Pannelli traforati-Frontal panel: Bianco/Nero-white/black
Piano chiusura-opening top:Bianco/nero-white/black
Completo di ammortizzatori-with Shock absorber
Bassorilievo e decori-bas-relief and decoration:
Argento foglia-Silver Foil
con formelle di **Murano** NERO o BIANCO
with tiles of **Murano** glass Black or White

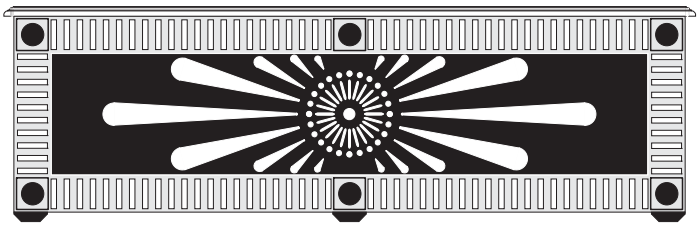

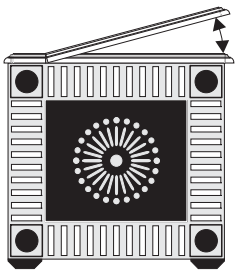

TRAYS

OPTIONAL:
Coppia vassoi scorrevoli - METALTITANIO
Couple of sliding trays - METALTITANIO

€ 663,30

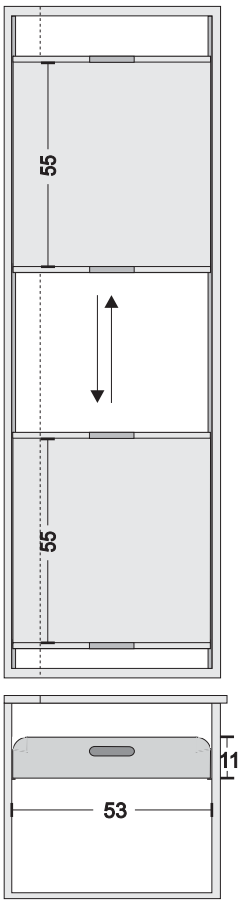

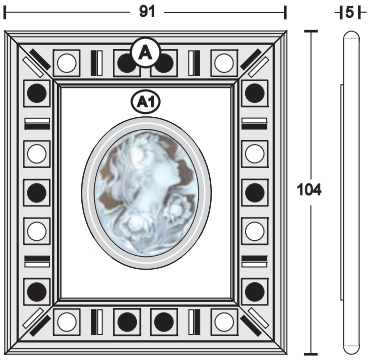

CAMMEO

Ovale con Cammeo (Sinistro o destro)
Oval with Cameo (Left or Right)

(A) Oro/Argento foglia formelle Murano Rosso-Nero-Bianco
Gold/Silver foil-Murano Glass: Red-Black-White
(A1) tutti i laccati opachi-all opaque laquering **€ 3.824,70**

(A) Bianco/Nero lucido-formelle Murano Bianco o Nero
Gloss White/Black-Murano Glass Black or White
(A1) tutti i laccati opachi-all opaque laquering **€ 3.957,80**

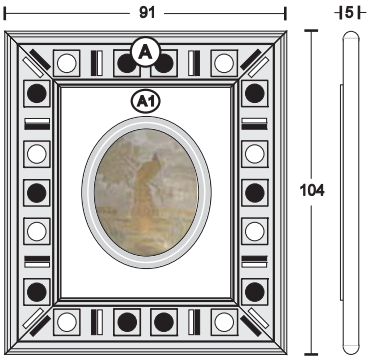

PAVONE

Ovale con Pavone Artistico oro 23/22/20/18/16/12 Carati (Sinistro o destro)
Oval with Artistic peacock Gold 23/22/20/18/16/12 carats (Left or Right)

(A) Oro/Argento foglia formelle Murano Rosso-Nero-Bianco
Gold/Silver foil-Murano Glass: Red-Black-White
(A1) tutti i laccati opachi-all opaque laquering **€ 5.654,00**

(A) Bianco/Nero lucido-formelle Murano Bianco o Nero
Gloss White/Black-Murano Glass Black or White
(A1) tutti i laccati opachi-all opaque laquering **€ 5.780,50**

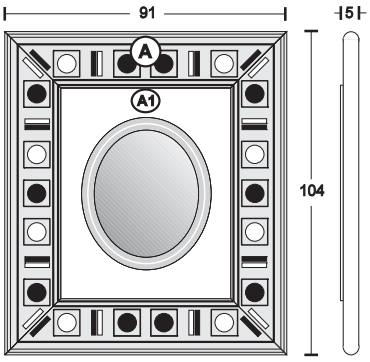

OVAL MIRROR

Ovale con specchio bisellato
Oval with bevelled mirror

(A) Oro/Argento foglia formelle Murano Rosso-Nero-Bianco-Gold/Silver foil-Murano Glass: Red-Black-White
(A1) tutti i laccati opachi-all opaque laquering **€ 3.613,50**

(A) Bianco/Nero lucido-formelle Murano Bianco o Nero-Gloss White/Black-Murano Glass Black or White
(A1) tutti i laccati opachi-all opaque laquering **€ 3.744,40**

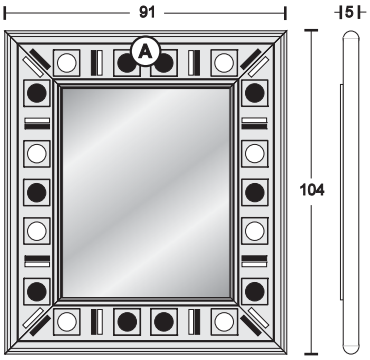

MIRROR

Specchio anticato o normale
Antique mirror or standard

(A) Oro/Argento foglia formelle Murano Rosso-Nero-Bianco
Gold/Silver foil-Murano Glass: Red-Black-White **€ 3.639,90**

(A) Bianco/Nero lucido-formelle Murano Bianco o Nero
Gloss White/Black-Murano Glass Black or White **€ 3.771,90**

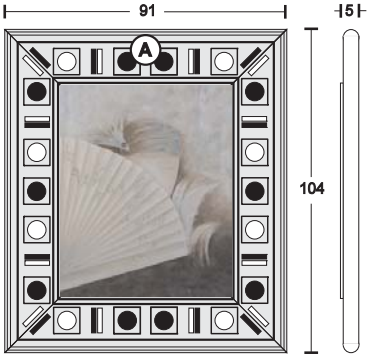

THE FAN

Dipinto materico "Donna con Ventaglio" (Sinistro o destro)
Hand-made Materic painting "Donna con Ventaglio" (Left or Right)

(A) Tutti i laccati opachi-Decorazioni Oro/Argento
all opaque laquering-decoration gold/silver foil **€ 3.932,50**

(A) Nero/Bianco Lucido-Decori Oro/ argento
Gloss Black/White-Gold/Silver Foil Decorations **€ 4.065,60**

CIAIKA -170 GLASS EYES

Tavolino porta CD/DVD per 800 Cd (e/o 378 DVD)
Coffee table CD/DVD rack for 800 CD (and or 378 DVD

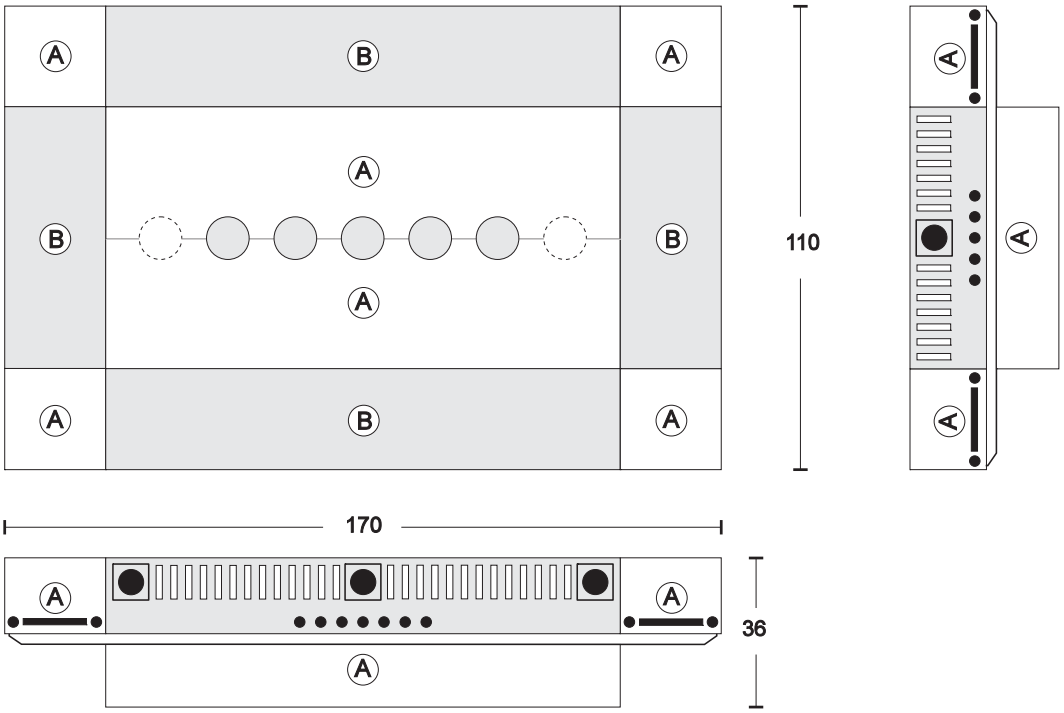

Finiture esterne standard
Outside Standard finishings

(A) METALBLACK con formelle di **Murano ROSSO** with tiles of **Murano** glass RED	(B) ORO FOGLIA (gold foil) con formelle di **Murano** NERO e ROSSO with tiles of **Murano** glass BLACK and RED	**€ 6.854,10**
(A) METALBLACK con formelle di **Murano BIANCO** with tiles of **Murano** glass WHITE	(B) ARGENTO FOGLIÆURO (silver foil) con formelle di **Murano** NERO e BIANCO with tiles of **Murano** glass BLACK and WHITE	**€ 6.854,10**
(A) ARGENTO FOGLIA (silver foil) con formelle di **Murano Bianco** with tiles of **Murano** glass White	(B) bianco/nero lucido **EURO** con formelle di **Murano** nero o bianco gloss white or black with tiles of **Murano** black or white	**€ 7.372,20**

Finitura superfici interne: METALSILVER o METALGOLD
Finishings of inside surface: METALSILVER or METALGOLD

CIAIKA -110 GLASS EYES

Tavolino porta CD/DVD per 490 Cd (e/o 218 DVD)
Coffe table CD/DVD rack for 490 CD (and or 218 DVD)

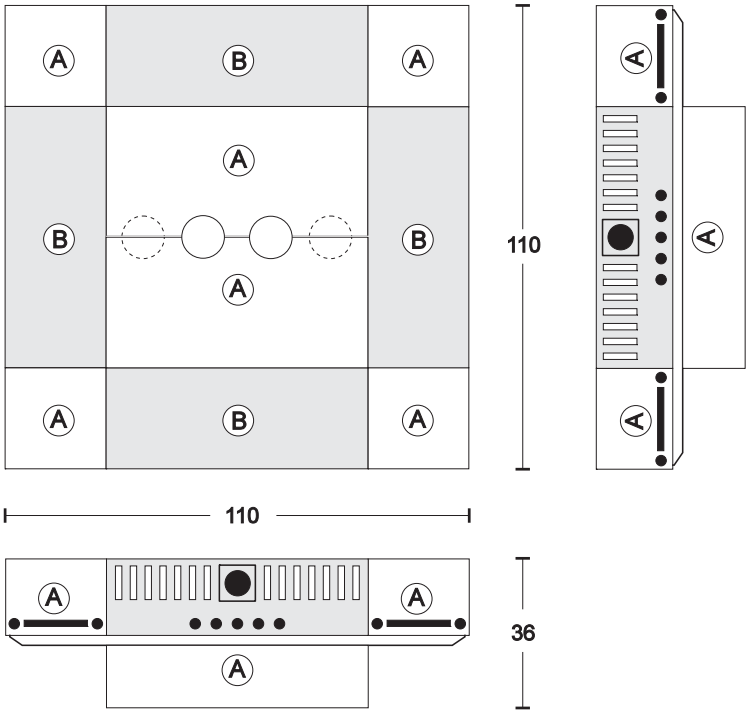

Finiture esterne standard
Outside Standard finishings

Ⓐ METALBLACK
con formelle di **Murano ROSSO**
with tiles of **Murano** glass RED

Ⓑ ORO FOGLIA (gold foil) **€ 5.545,10**
con formelle di **Murano** NERO e ROSSO
with tiles of **Murano** glass BLACK and RED

Ⓐ METALBLACK
con formelle di **Murano BIANCO**
with tiles of **Murano** glass WHITE

Ⓑ ARGENTO FOGLIA (silver foil) **€ 5.545,10**
con formelle di **Murano** NERO e BIANCO
with tiles of **Murano** glass BLACK and WHITE

Ⓐ ARGENTO FOGLIA (silver foil)
con formelle di **Murano Bianco**
with tiles of **Murano** glass White

Ⓑ bianco/nero lucido **€ 6.209,50**
con formelle di **Murano** nero o bianco
gloss white or black
with tiles of **Murano** black or white

Finitura superfici interne: METALSILVER o METALGOLD
Finishings of inside surface: METALSILVER or METALGOLD

CIAIKA - 110 SLIM - GLASS EYES

Tavolino porta CD/DVD per 180 Cd (e/o 92 DVD)
Coffe table CD/DVD rack for 180 CD (and or 92 DVD)

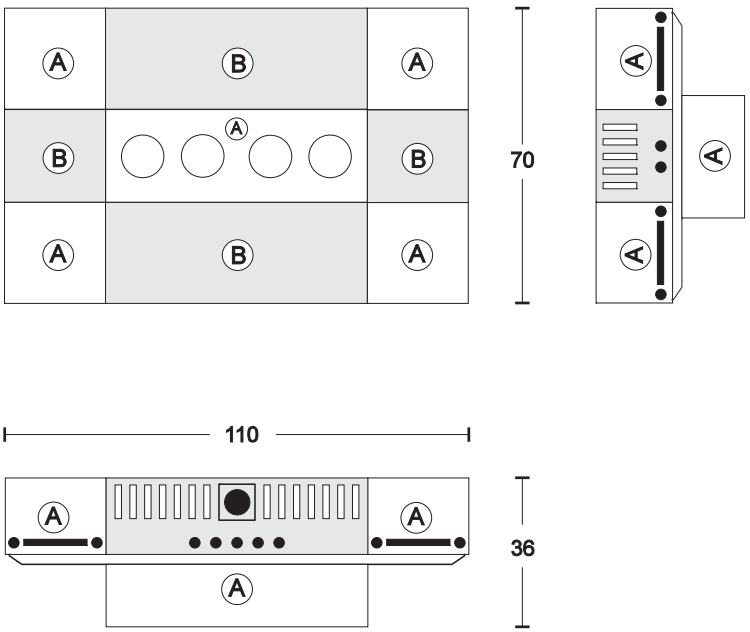

Finiture esterne standard
Outside Standard finishings

Ⓐ METALBLACK
con formelle di **Murano ROSSO**
with tiles of **Murano** glass RED

Ⓑ ORO FOGLIA (gold foil) **€ 4.981,90**
con formelle di **Murano** NERO e ROSSO
with tiles of **Murano** glass BLACK and RED

Ⓐ METALBLACK
con formelle di **Murano BIANCO**
with tiles of **Murano** glass WHITE

Ⓑ ARGENTO FOGLIA (silver foil) **€ 4.981,90**
con formelle di **Murano** NERO e BIANCO
with tiles of **Murano** glass BLACK and WHITE

Ⓐ ARGENTO FOGLIA (silver foil)
con formelle di **Murano Bianco**
with tiles of **Murano** glass White

Ⓑ bianco/nero lucido **€ 5.678,20**
con formelle di **Murano** nero o bianco
gloss white or black
with tiles of **Murano** black or white

Finitura superfici interne: METALSILVER o METALGOLD
Finishings of inside surface: METALSILVER or METALGOLD

1 WINDOWS - COFFEE TABLE - GLASS EYES

Tavolino contenitore con vassoi estraibili - Coffee table container removable tray

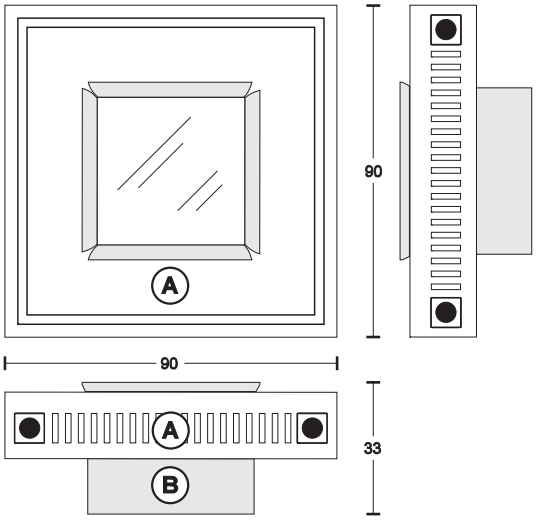

(A) oro/argento foglia - formelle Murano rosso-nero-bianco - decori nero - vassoi in vetro temperato - maniglie nero opaco gold/silver foil - Murano glass red-black-white, decoration Black - Ardened Glass Trays handles Black opaque **€ 3.492,50**

(B) Nero opaco-Black opaque

(A) tutti i laccati opachi-formelle Murano nero/bianco/rosso - decori argento foglia-vassoi in vetro temperato - maniglie oro/argento foglia All opaque laquering-Murano glass black/white/red decoration gold/silver foil - Ardened Glass Trays, handles Gold/Silverfoil **€ 2.882,00**

(B) tutti i laccati opachi-All opaque laquering

2 WINDOWS - COFFEE TABLE - GLASS EYES

Tavolino contenitore con vassoi estraibili - Coffee table container removable tray

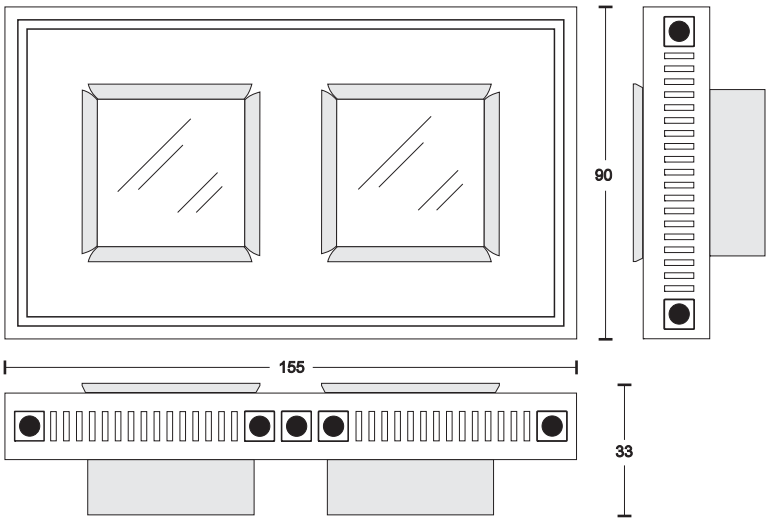

(A) oro/argento foglia - formelle Murano rosso-nero-bianco - decori nero - vassoi in vetro temperato - maniglie nero gold/silver foil - Murano glass red-black-white - decoration Black - Ardened Glass Trays - handles Black opaque € 5.538,50

(B) Nero opaco-Black opaque

(A) tutti i laccati opachi-formelle Murano nero/bianco/rosso-decori argento foglia-vassoi in vetro temperato-maniglie oro/argento foglia All opaque laquering-Murano glass black/white/red - decoration gold/silver foil - Ardened Glass Trays - handles Gold/Silverfoil € 4.653,00

(D) tutti i laccati opachi-All opaque laquering

4 WINDOWS - COFFEE TABLE - GLASS EYES

Tavolino contenitore con vassoi estraibili - Coffee table container removable tray

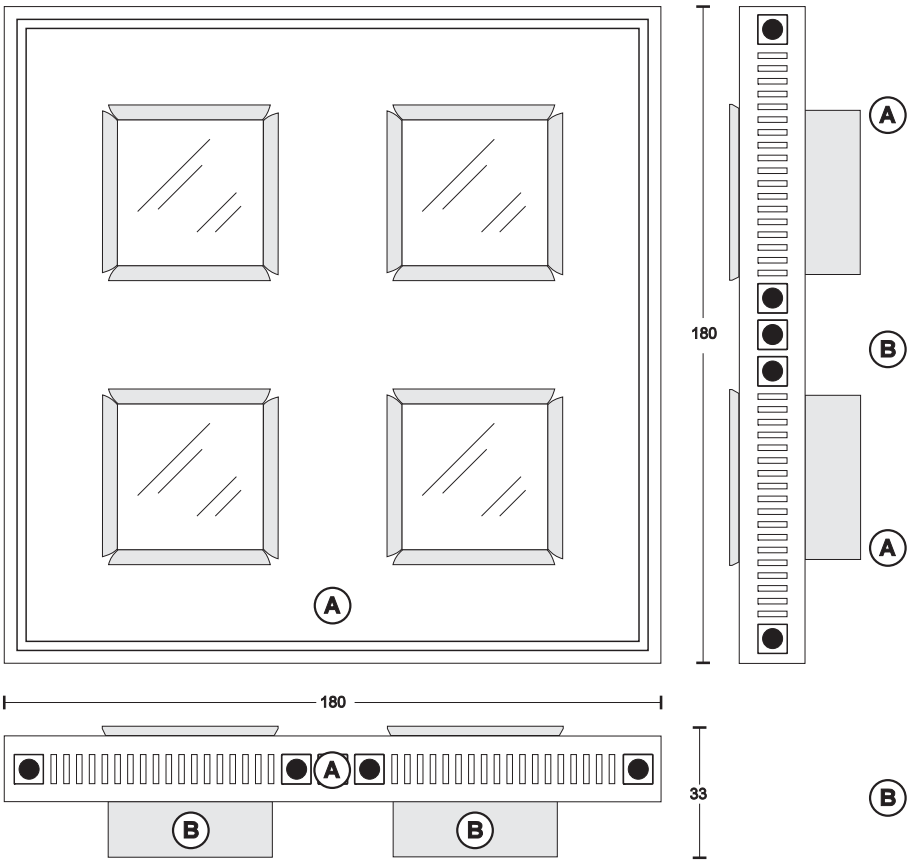

(A) oro/argento foglia-formelle Murano rosso-nero-bianco - decori nero - vassoi in vetro temperato - maniglie nero opaco
gold/silver foil - Murano glass, red-black-white, decoration Black - Ardened Glass Trays, handles Black opaque

(B) Nero opaco-Black opaque

€ 9.586,50

(A) tutti i laccati opachi-formelle Murano nero/bianco/rosso - decori argento foglia-vassoi in vetro temperato - maniglie oro/argento foglia
All opaque laquering-Murano glass black/white/red decoration gold/silver foil - Ardened Glass Trays, handles Gold/Silverfoil

(B) tutti i laccati opachi-All opaque laquering
Alle Matte Lackierungen

€ 8.261,00

3 WINDOWS - COFFEE TABLE - GLASS EYES

Tavolino contenitore con vassoi estraibili - Coffee table container removable tray

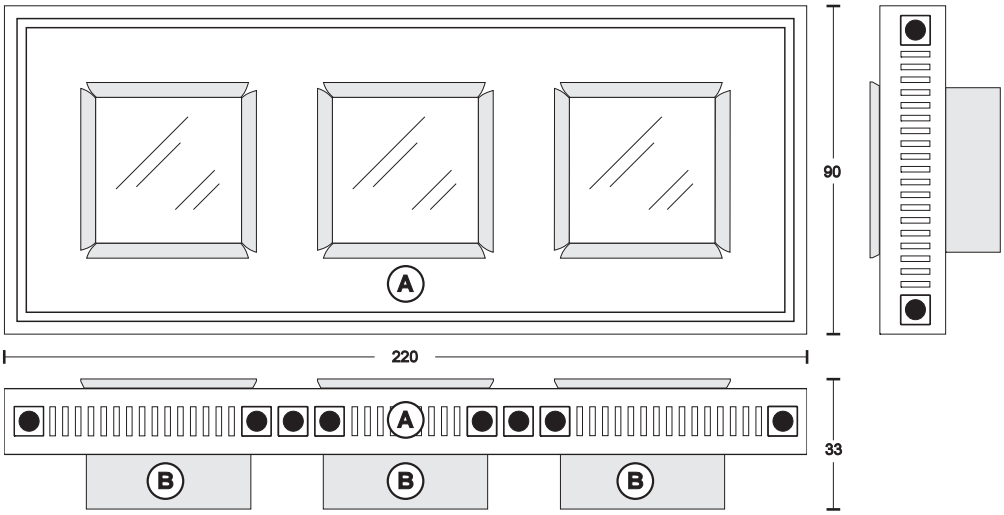

(A) oro/argento foglia - formelle Murano rosso-nero-bianco - decori nero - vassoi in vetro temperato - maniglie nero opaco — € 7.870,50
gold/silver foil - Murano glass red-black-white - decoration Black - Ardened Glass Trays - handles Black opaque

(B) Nero opaco-Black opaque

(A) tutti i laccati opachi-formelle Murano nero/bianco/rosso-decori argento foglia-vassoi in vetro temperato-maniglie oro/argento foglia — € 6.666,00
All opaque laquering-Murano glass black/white/red - decoration gold/silver foil - Ardened Glass Trays - handles Gold/Silverfoil

(D) tutti i laccati opachi-All opaque laquering

FLOWER 60 - GLASS EYES

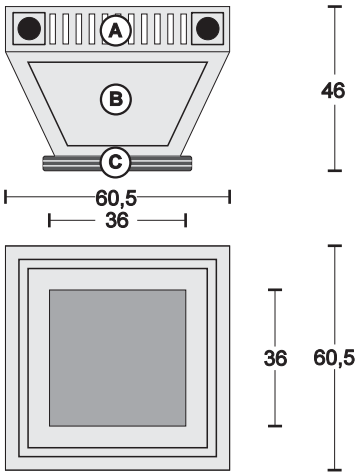

Finiture - finishings

A+B Oro Foglia con formelle di **Murano** Nero+Rosso € 2.261,60
Goldfoil with tiles of **Murano** glass Black+Red
Argento foglia con formelle di **Murano** Nero+Bianco
Silverfoil with tiles of **Murano** glass Black+White
- decorazioni-decorations:Nero (Black)

C Metalblack + decorazioni-decorations
-Oro/Argento foglia-Gold/Silverfoil

A+C Bianco/Nero Lucido con formelle di **Murano** Nero o Bianco € 2.359,50
Gloss White/Black with tiles of **Murano** glass Black or White

B Bianco/Nero opaco-Opaque White/Black
- decorazioni-decorations:
Argento foglia-Silver Foil

Completo di vasca metallica zincata-including galvanized metal tank

VASE 90 - GLASS EYES

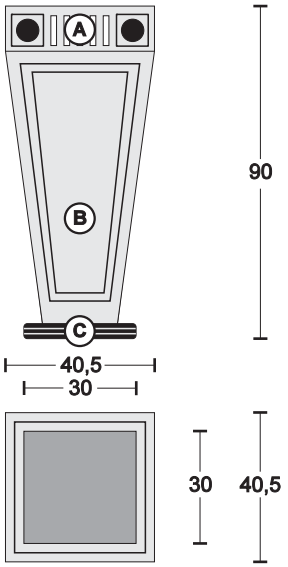

Finiture - finishings - Ausführungen

A+B Oro Foglia con formelle di **Murano** Nero+Rosso € 2.119,70
Goldfoil with tiles of **Murano** glass Black+Red
Argento foglia con formelle di **Murano** Nero+Bianco
Silverfoil with tiles of **Murano** glass Black+White
- decorazioni-decorations:Nero (Black)

C Metalblack + decorazioni-decorations
-Oro/Argento foglia-Gold/Silverfoil

A+C Bianco/Nero Lucido con formelle di **Murano** Nero o Bianco € 2.233,00
Gloss White/Black with tiles of **Murano** glass Black or White

B Bianco/Nero opaco-Opaque White/Black
- decorazioni-decorations:
Argento foglia-Silver Foil

Completo di vasca metallica zincata oppure chiusura top per colonna
including galvanized metal tank or top as column

VASE 125 - GLASS EYES

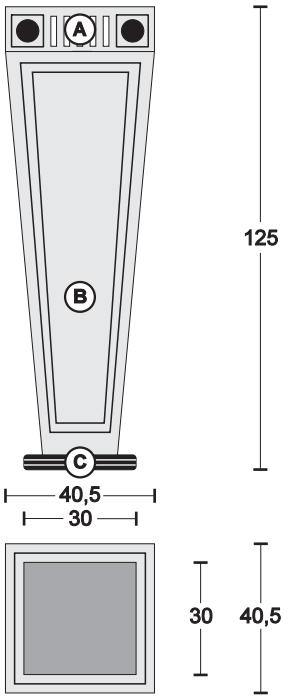

Finiture - finishings

A+B Oro Foglia con formelle di **Murano** Nero+Rosso € 2.385,90
Goldfoil with tiles of **Murano** glass Black+Red
Argento foglia con formelle di **Murano** Nero+Bianco
Silverfoil with tiles of **Murano** glass Black+White
- decorazioni-decorations:Nero (Black)

C Metalblack + decorazioni-decorations
-Oro/Argento foglia-Gold/Silverfoil

A+C Bianco/Nero Lucido con formelle di **Murano** Nero o Bianco € 2.484,90
Gloss White/Black with tiles of **Murano** glass Black or White

B Bianco/Nero opaco-Opaque White/Black
- decorazioni-decorations:
Argento foglia-Silver Foil

Completo di vasca metallica zincata oppure chiusura top per colonna
including galvanized metal tank or top as column

FLOWER 60 - BRAZIER - GLASS EYES

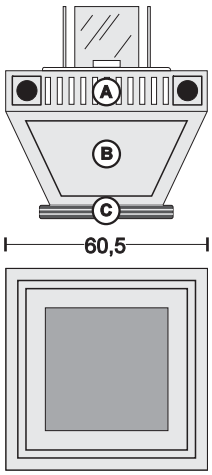

Finiture - finishings

A+B Oro Foglia con formelle di **Murano** Nero+Rosso € 3.797,20
Goldfoil with tiles of **Murano** glass Black+Red
Argento foglia con formelle di **Murano** Nero+Bianco
Silverfoil with tiles of **Murano** glass Black+White
- decorazioni-decorations:Nero (Black)

C Metalblack + decorazioni-decorations
-Oro/Argento foglia-Gold/Silverfoil

A+C Bianco/Nero Lucido con formelle di **Murano** Nero o Bianco € 3.890,70
Gloss White/Black with tiles of **Murano** glass Black or White

B Bianco/Nero opaco-Opaque White/Black
- decorazioni-decorations:
Argento foglia-Silver Foil

Con braciere a bio-alcol removibile-completo di vetri temperati

VASE 90 - BRAZIER - GLASS EYES

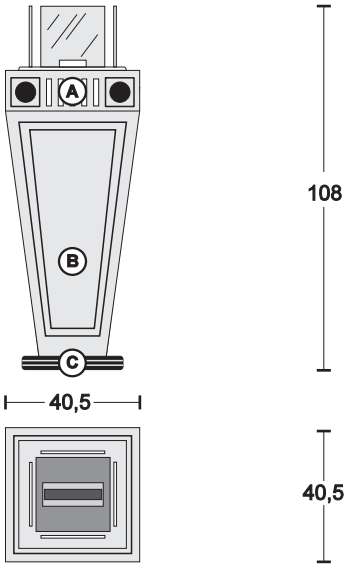

Finiture - finishings

A+B Oro Foglia con formelle di **Murano** Nero+Rosso € 3.663,00
Goldfoil with tiles of **Murano** glass Black+Red
Argento foglia con formelle di **Murano** Nero+Bianco
Silverfoil with tiles of **Murano** glass Black+White
- decorazioni-decorations:Nero (Black)

C Metalblack + decorazioni-decorations
-Oro/Argento foglia-Gold/Silverfoil

A+C Bianco/Nero Lucido con formelle di **Murano** Nero o Bianco € 3.769,70
Gloss White/Black with tiles of **Murano** glass Black or White

B Bianco/Nero opaco-Opaque White/Black
- decorazioni-decorations:
Argento foglia-Silver Foil

Con braciere a bio-alcol removibile-completo di vetri temperati
Complete of bio-alcohol removable brazier-complete of tempered glass

VASE 125 - BRAZIER - GLASS EYES

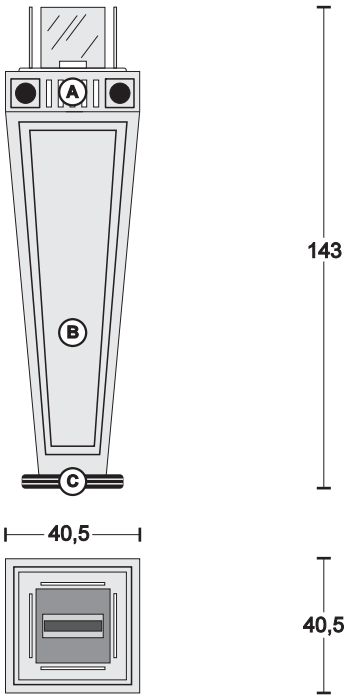

Finiture - finishings

A+B Oro Foglia con formelle di **Murano** Nero+Rosso € 3.916,00
Goldfoil with tiles of **Murano** glass Black+Red
Argento foglia con formelle di **Murano** Nero+Bianco
Silverfoil with tiles of **Murano** glass Black+White
- decorazioni-decorations:Nero (Black)

C Metalblack + decorazioni-decorations
-Oro/Argento foglia-Gold/Silverfoil

A+C Bianco/Nero Lucido con formelle di **Murano** Nero o Bianco € 4.009,50
Gloss White/Black with tiles of **Murano** glass Black or White

B Bianco/Nero opaco-Opaque White/Black
- decorazioni-decorations:
Argento foglia-Silver Foil

Con braciere a bio-alcol removibile-completo di vetri temperati
Complete of bio-alcohol removable brazier-complete of tempered glass

CHEST-NOUVEAU-282 GLASS EYES DIVANO - SOFA

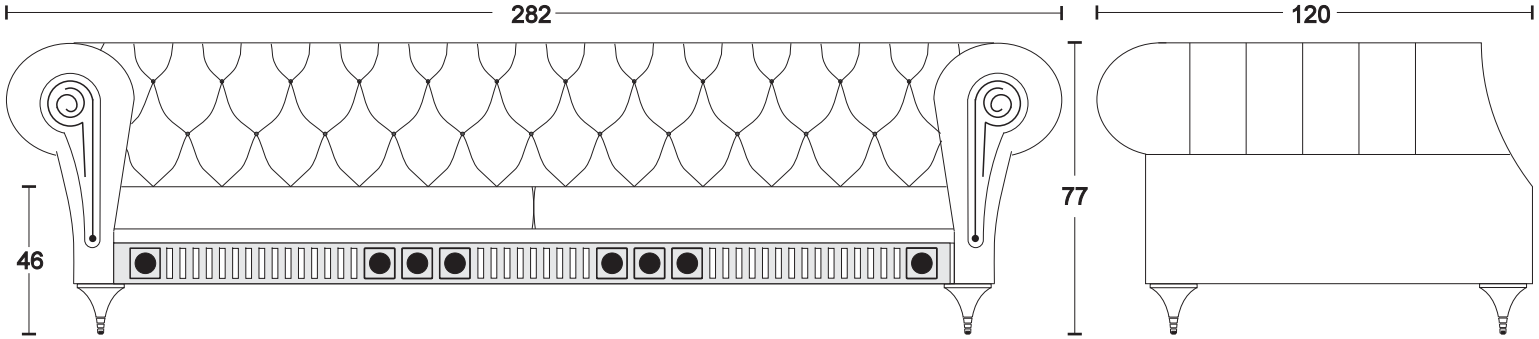

Pelle-Leather cat."SOFT"	Pelle-Leather cat."EXTRA"	Pelle-Leather cat."GLAM"
€ 14.146,00	€ 15.422,00	€ 16.802,50
Eco Nabuk Eco Nubuk	Velluto Velvet	
€ 12.169,30	€ 12.369,00	

CHEST-NOUVEAU-209 GLASS EYES DIVANO - SOFA

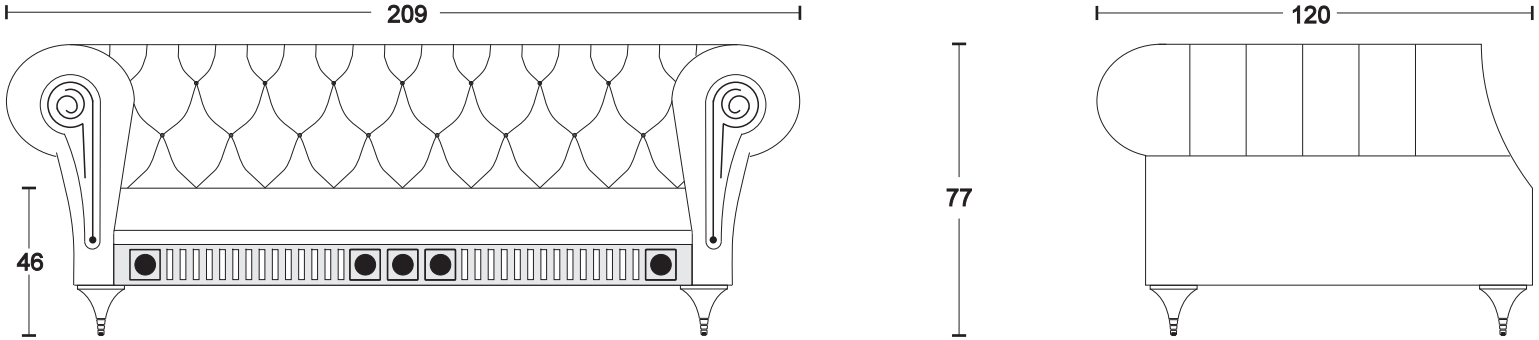

Pelle-Leather cat."SOFT"	Pelle-Leather cat."EXTRA"	Pelle-Leather cat."GLAM"
€ 10.330,00	€ 12.336,50	€ 13.447,50
Eco Nabuk Eco Nubuk	Velluto Velvet	
€ 9.867,00	€ 10.919,70	

CHEST-NOUVEAU-123 GLASS EYES POLTRONA - ARMCHAIR

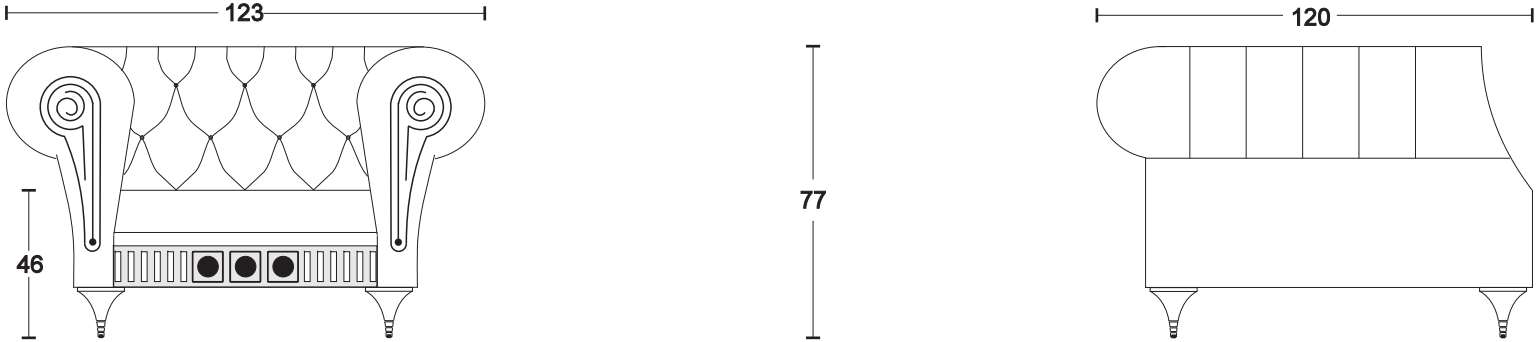

Pelle-Leather cat."SOFT"	Pelle-Leather cat."EXTRA"	Pelle-Leather cat."GLAM"
€ 9.476,50	€ 10.307,00	€ 11.247,50
Eco Nabuk Eco Nubuk	Velluto Velvet	
€ 7.653,80	€ 8.571,20	

CHEST NOUVEAU - GLASS EYES

CHAISE LOUNGE - DX

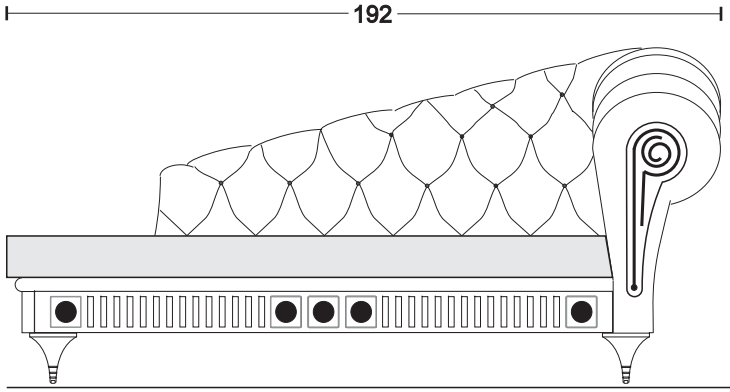

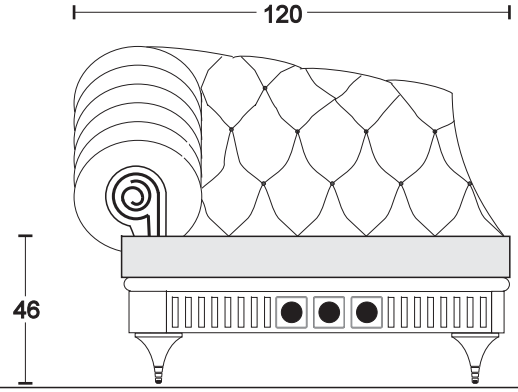

Pelle-Leather cat."SOFT"	Pelle-Leather cat."EXTRA"	Pelle-Leather cat."GLAM"
€ 11.341,00	€ 12.309,00	€ 13.409,00
Eco Nabuk Eco Nubuk	Velluto Velvet	
€ 9.038,70	€ 10.140,90	

CHEST NOUVEAU - GLASS EYES

CHAISE LOUNGE - SX

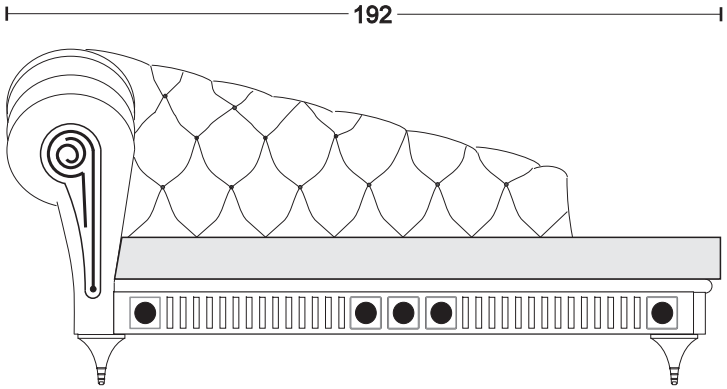

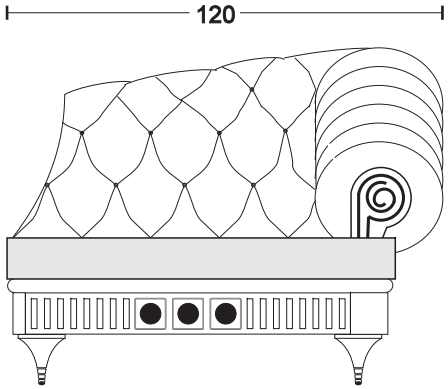

Pelle-Leather cat."SOFT"	Pelle-Leather cat."EXTRA"	Pelle-Leather cat."GLAM"
€ 11.341,00	€ 12.309,00	€ 13.409,00
Eco Nabuk Eco Nubuk	Velluto Velvet	
€ 9.038,70	€ 10.140,90	

CHEST NOUVEAU

Pelle Leather cat.SOFT	Pelle Leather cat.EXTRA	Pelle Leather cat.GLAM	Eco Nabuk Eco Nubuk	Velluto Velvet
€ 495,00	€ 583,00	€ 676,50	€ 284,90	€ 367,40

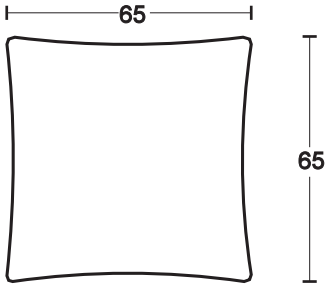

EXTRA CUSCINO - EXTRA CUSCION 65-55-45

Pelle Leather cat.SOFT	Pelle Leather cat.EXTRA	Pelle Leather cat.GLAM	Eco Nabuk Eco Nubuk	Velluto Velvet
€ 456,50	€ 533,50	€ 632,50	€ 266,20	€ 335,50

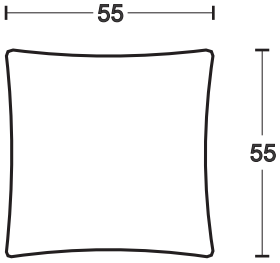

Pelle Leather cat.SOFT	Pelle Leather cat.EXTRA	Pelle Leather cat.GLAM	Eco Nabuk Eco Nubuk	Velluto Velvet
€ 412,50	€ 484,00	€ 561,00	€ 242,00	€ 303,60

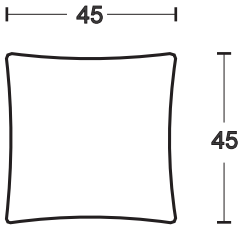

CONFORT-NOUVEAU-264 GLASS EYES DIVANO - SOFA

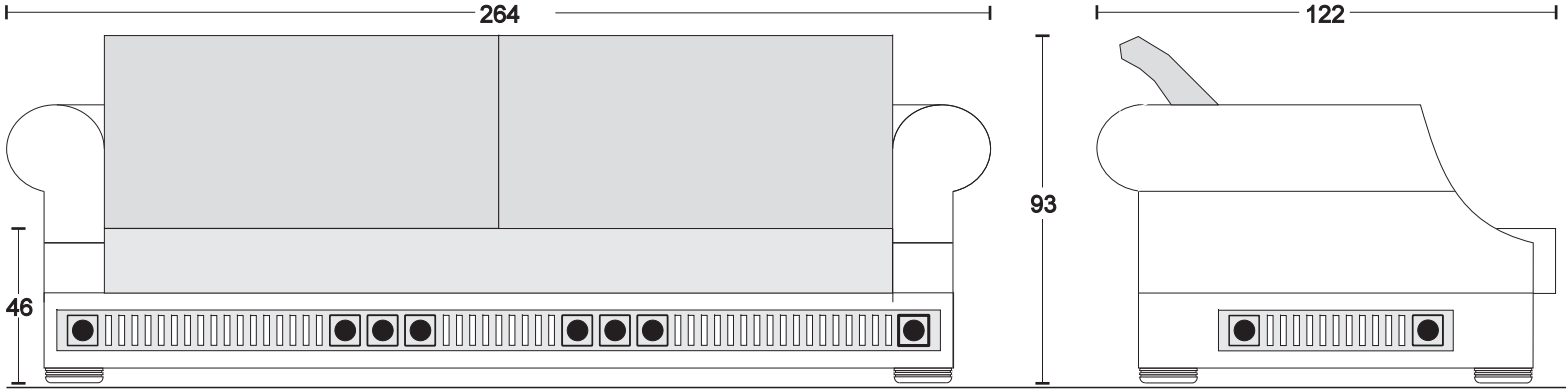

Pelle-Leather cat."SOFT"	Pelle-Leather cat."EXTRA"	Pelle-Leather cat."GLAM"
€ 11.792,00	€ 12.963,50	€ 14.333,00
Eco Nabuk Eco Nubuk	Velluto Velvet	
€ 9.121,20	€ 10.582,00	

CONFORT-NOUVEAU-193 GLASS EYES DIVANO - SOFA

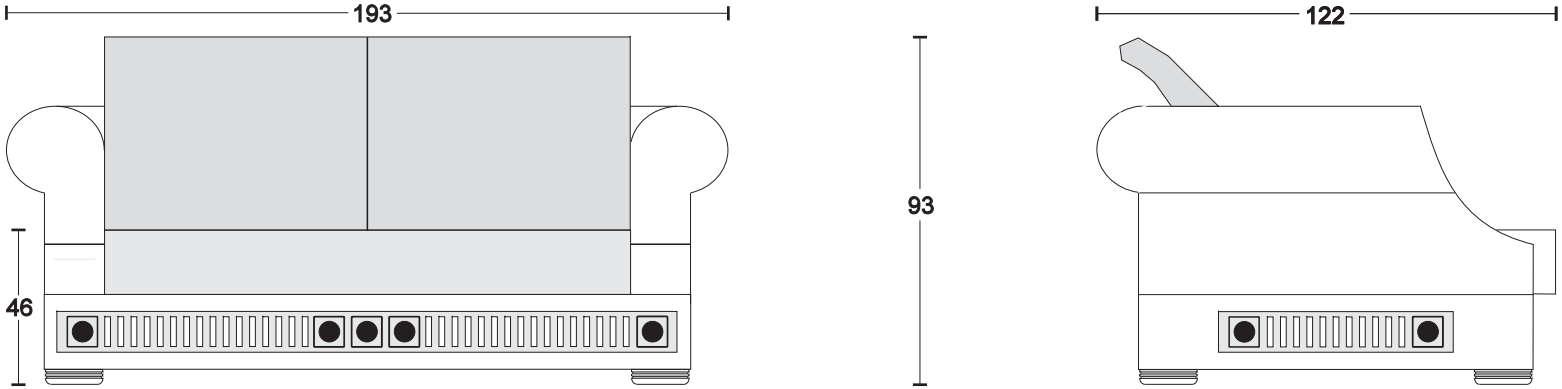

Pelle-Leather cat."SOFT"	Pelle-Leather cat."EXTRA"	Pelle-Leather cat."GLAM"
€ 9.625,00	€ 10.752,50	€ 11.968,00
Eco Nabuk Eco Nubuk	Velluto Velvet	
€ 7.590,00	€ 8.866,00	

CONFORT-NOUVEAU-125 GLASS EYES POLTRONA - ARMCHAIR

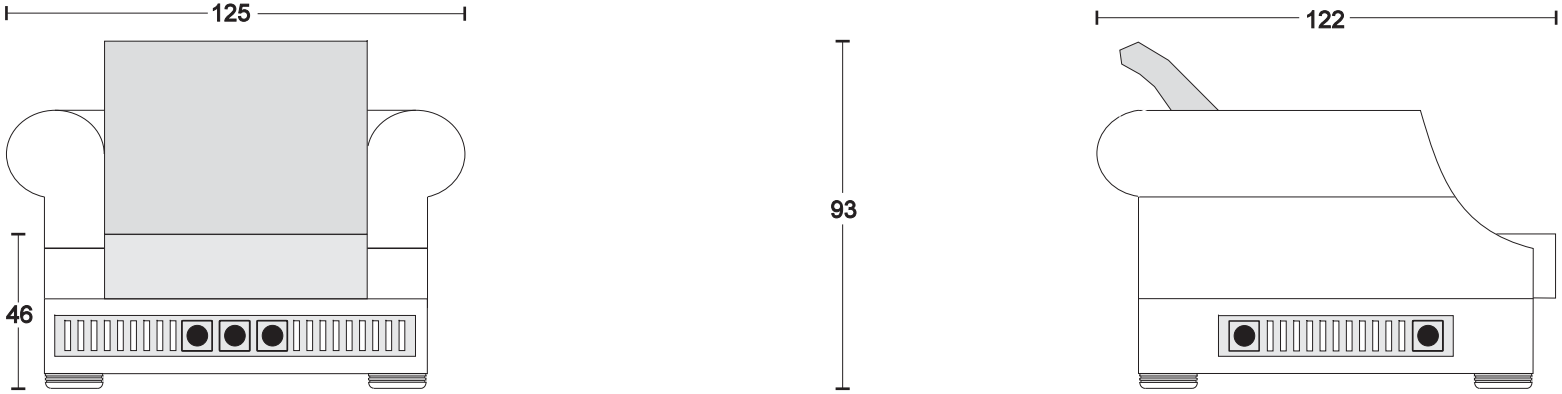

Pelle-Leather cat."SOFT"	Pelle-Leather cat."EXTRA"	Pelle-Leather cat."GLAM"
€ 7.436,00	€ 8.195,00	€ 8.992,50
Eco Nabuk Eco Nubuk	Velluto Velvet	
€ 5.908,10	€ 6.825,50	

CONFORT-NOUVEAU-264 Lumbar Cushion GLASS EYES — DIVANO - SOFA

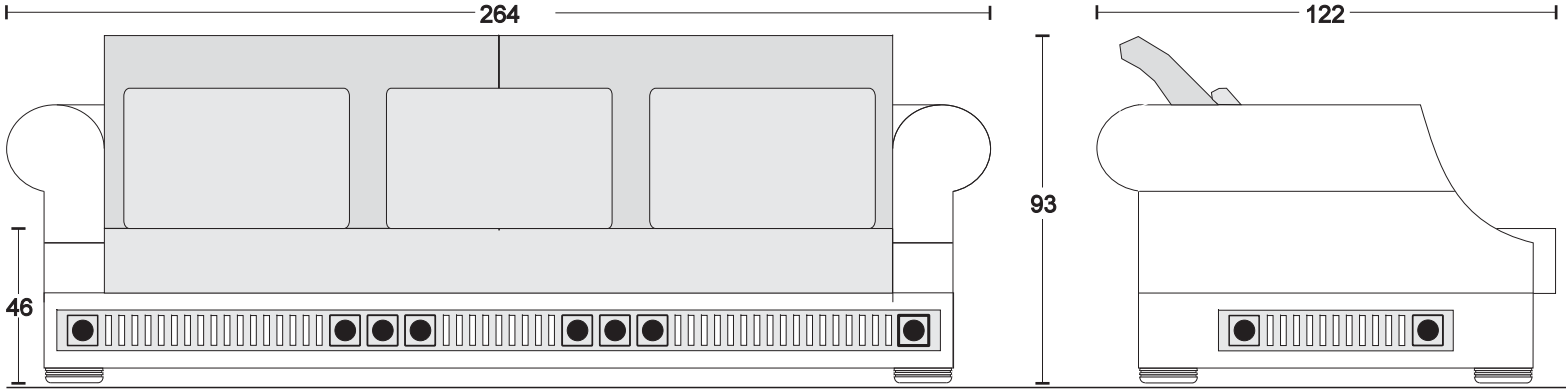

Pelle-Leather cat."SOFT"	Pelle-Leather cat."EXTRA"	Pelle-Leather cat."GLAM"
€ 12.930,50	€ 14.294,50	€ 15.851,00
Eco Nabuk Eco Nubuk	Velluto Velvet	
€ 9.880,20	€ 11.518,10	

CONFORT-NOUVEAU-193 Lumbar Cushion GLASS EYES — DIVANO - SOFA

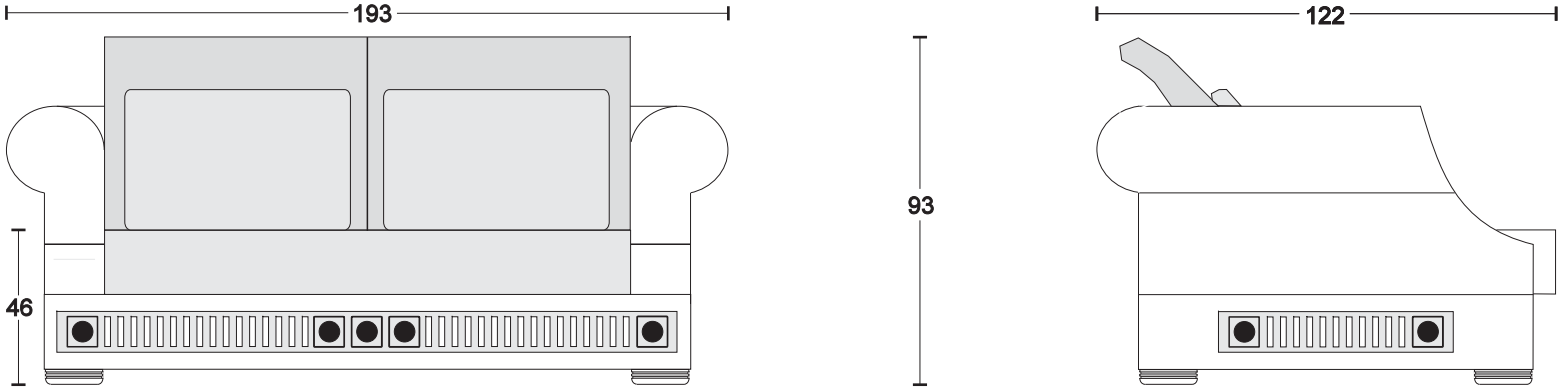

Pelle-Leather cat."SOFT"	Pelle-Leather cat."EXTRA"	Pelle-Leather cat."GLAM"
€ 10.384,00	€ 11.638,00	€ 12.980,00
Eco Nabuk Eco Nubuk	Velluto Velvet	
€ 8.096,00	€ 9.485,30	

CONFORT-NOUVEAU-125 Lumbar Cushion GLASS EYES — POLTRONA - ARMCHAIR

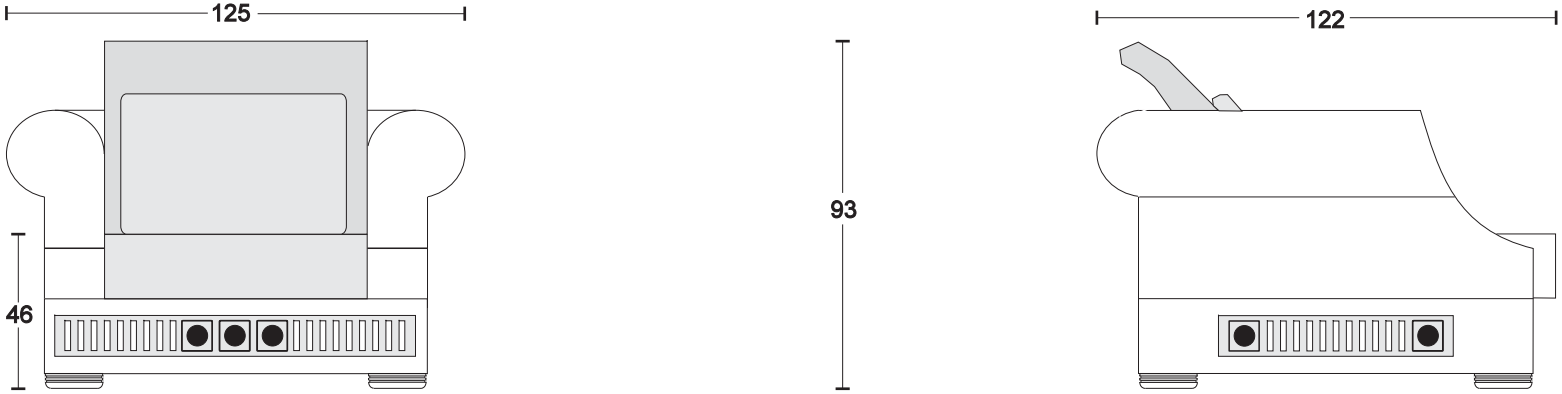

Pelle-Leather cat."SOFT"	Pelle-Leather cat."EXTRA"	Pelle-Leather cat."GLAM"
€ 7.821,00	€ 8.640,50	€ 9.498,50
Eco Nabuk Eco Nubuk	Velluto Velvet	
€ 6.161,10	€ 7.134,60	

CONFORT NOUVEAU- GLASS EYES — CHAISE LOUNGE - DX

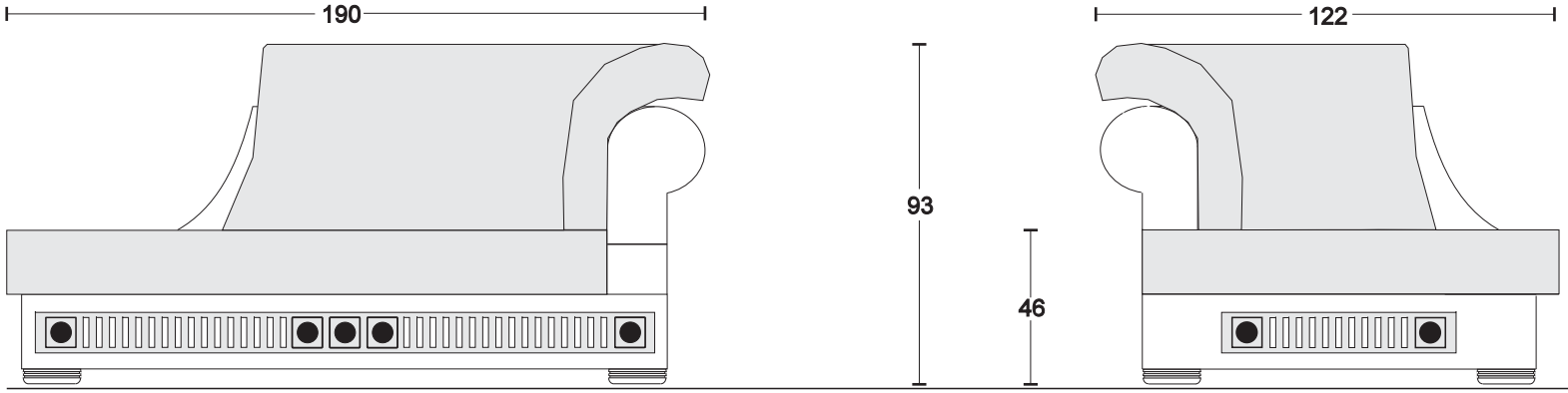

Pelle-Leather cat."SOFT"	Pelle-Leather cat."EXTRA"	Pelle-Leather cat."GLAM"
€ 9.713,00	€ 10.730,50	€ 11.704,00
Eco Nabuk Eco Nubuk	Velluto Velvet	
€ 7.982,70	€ 9.086,00	

CONFORT NOUVEAU- GLASS EYES — CHAISE LOUNGE - SX

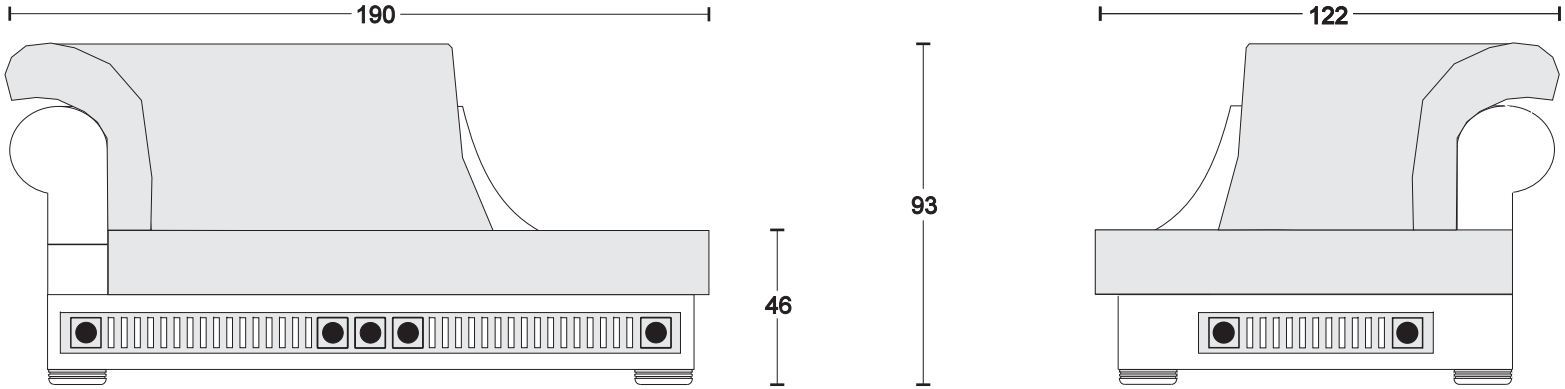

Pelle-Leather cat."SOFT"	Pelle-Leather cat."EXTRA"	Pelle-Leather cat."GLAM"
€ 9.713,00	€ 10.730,50	€ 11.704,00
Eco Nabuk Eco Nubuk	Velluto Velvet	
€ 7.982,70	€ 9.086,00	

CONFORT NOUVEAU — EXTRA CUSCINO - EXTRA CUSCION 65-55-45

Pelle Leather cat.SOFT	Pelle Leather cat.EXTRA	Pelle Leather cat.GLAM	Eco Nabuk Eco Nubuk	Velluto Velvet
€ 495,00	€ 583,00	€ 676,50	€ 284,90	€ 367,40

Pelle Leather cat.SOFT	Pelle Leather cat.EXTRA	Pelle Leather cat.GLAM	Eco Nabuk Eco Nubuk	Velluto Velvet
€ 456,50	€ 533,50	€ 632,50	€ 266,20	€ 335,50

Pelle Leather cat.SOFT	Pelle Leather cat.EXTRA	Pelle Leather cat.GLAM	Eco Nabuk Eco Nubuk	Velluto Velvet
€ 412,50	€ 484,00	€ 561,00	€ 242,00	€ 303,60

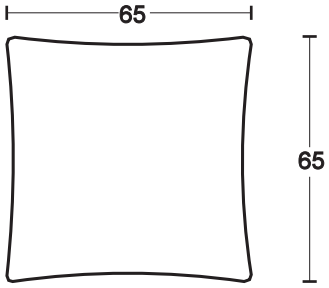

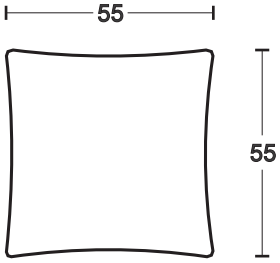

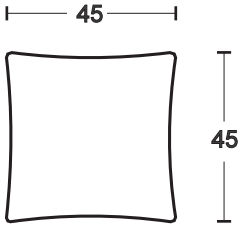

PLAY ROOM - POOL TABLE 10-12 FEET - GLASS EYES

10 piedi dimensioni campo gioco cm. 284 x 142 - Dimensioni esterne cm. 320 x 178 - Russo H. 80; Snooker inglese H. 80; Americano H. 78
10 Feet playng fiel dimention cm. 284 x 142 - External dimention cm. 320 x 178 - Russian H. 80; English Snooker H. 80; American H. 78
Con piano in ardesia 40 mm - With playground stone slate 40 mm

12 piedi dimensioni campo gioco cm. 355 x 177 - Dimensioni esterne cm. 391 x 213 - Russo H. 80; Snooker inglese H. 80; Americano H. 78
12 Feet playng fiel dimention cm. 355 x 177 - External dimention cm. 391 x 213 - Russian H. 80; English Snooker H. 80; American H. 78
Con piano in ardesia 40 mm - With playground stone slate 40 mm

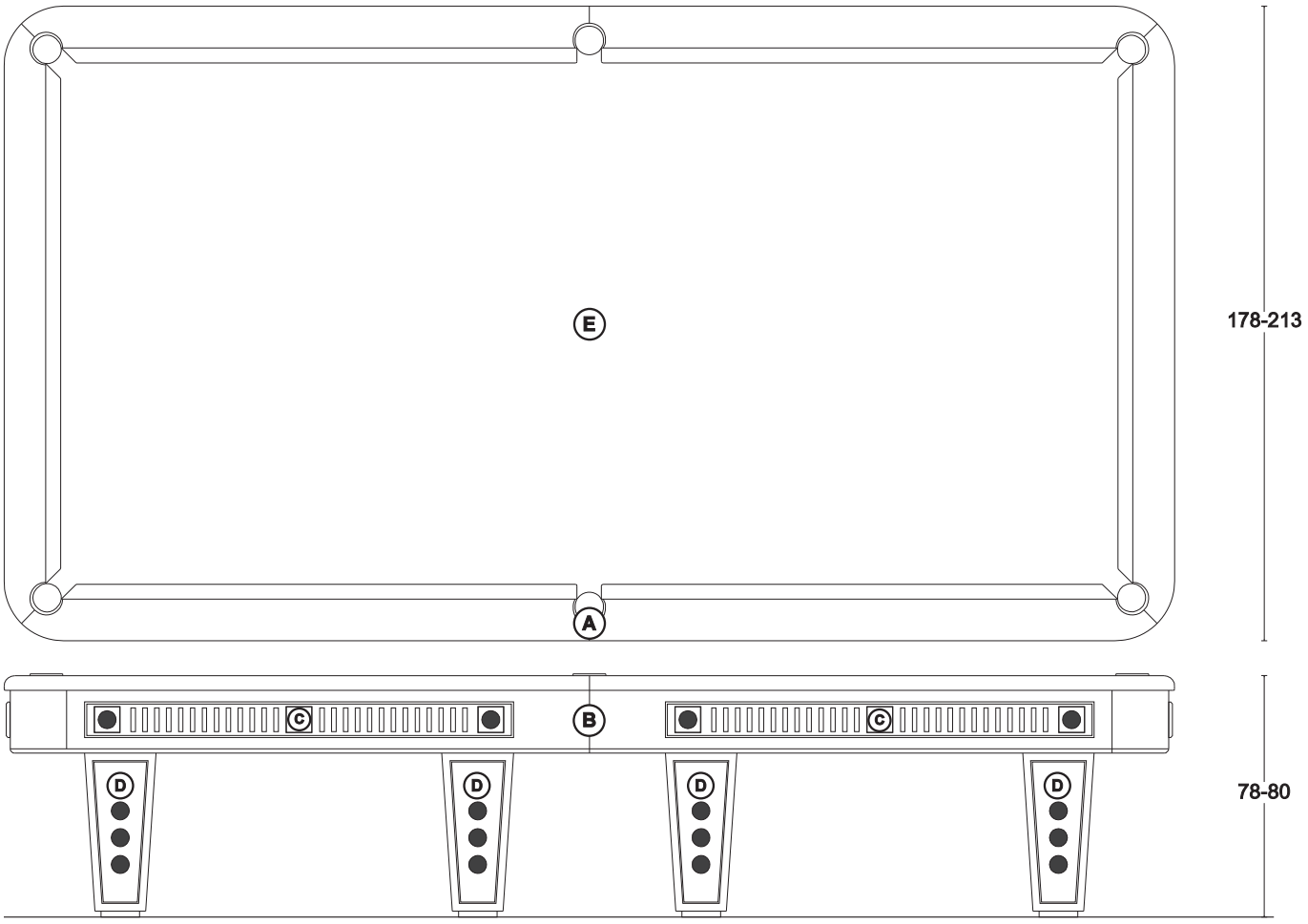

A+B+D Tutti i Laccato opaco — D Decorazioni: Oro/Argento foglia con formelle di Murano Nero/Bianco/Rosso
All Opaque laquered — D Decoration: Gold/Silver foil with tiles of Murano Glass Black/White/Red

C Inserti: Tutte laccati opachi con formelle di Murano Nero/Bianco/Rosso-Decorazioni oro/argento fogliai
Insert: All Opaque laquered with tiles of Murano Glass Black/White/Red-Decorations Gold/Silver foil

E Tappeto biliardo colori diversi - Pool table cloth different colours

10 PIEDI-10 FEET € 62.364,50
12 PIEDI-12 FEET € 74.255,50

A+B+D Tutti i Laccato lucido — D Decorazioni: Oro/Argento foglia con formelle di Murano Nero/Bianco/Rosso
All Glossy laquered — D Decoration: Gold/Silver foil with tiles of Murano Glass Black/White/Red

C Inserti: Tutte laccati lucidi con formelle di Murano Nero/Bianco/Rosso-Decorazioni oro/argento fogliai
Insert: All Glossy laquered with tiles of Murano Glass Black/White/Red-Decorations Gold/Silver foil

E Tappeto biliardo colori diversi - Pool table cloth different colours

10 PIEDI-10 FEET € 63.503,00
12 PIEDI-12 FEET € 75.394,00

PLAY ROOM - POOL LAMP 10-12 FEET - GLASS EYES

Lampada a LED per biliardo da 10-12 piedi - 170 Watt - peso kg. 85
LED Lamp for Pool 10-12 Feet - 170 Watt - Weight Kg. 85

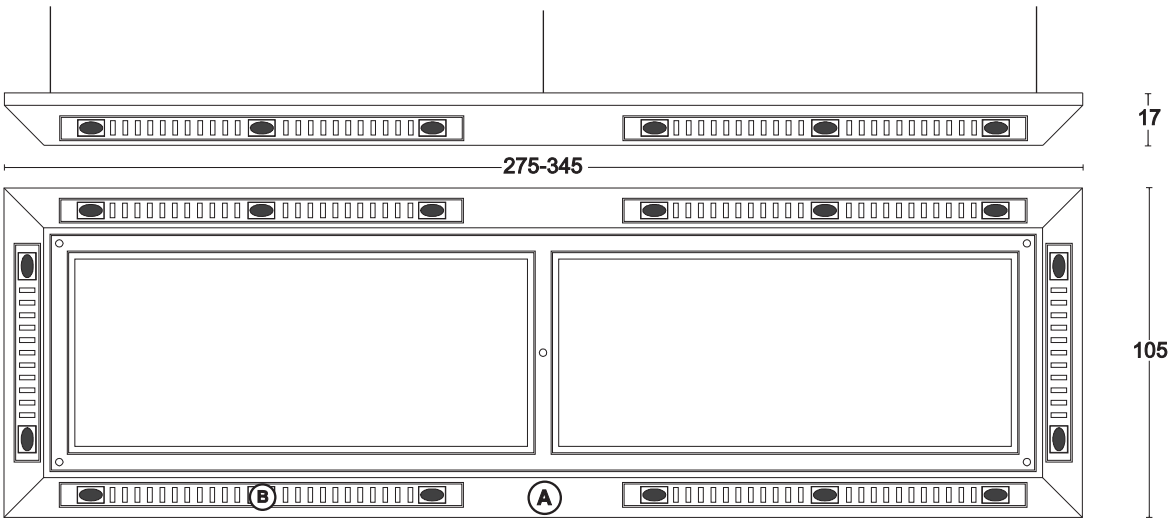

(A) Tutti i Laccato opaco — Decorazioni: Oro/Argento foglia — **€ 11.764,50**
All Opaque laquered — Decoration: Gold/Silver foil

(B) Inserti: Tutte laccati opachi con formelle di Murano Nero/Bianco/Rosso-Decorazioni oro/argento fogliai
Insert: All Opaque laquered with tiles of Murano Glass Black/White/Red-Decorations Gold/Silver foil

(A) Tutti i Laccato lucido — Decorazioni: Oro/Argento foglia — **€ 12.776,50**
All Glossy laquered — Decoration: Gold/Silver foil

(B) Inserti: Tutte laccati lucidi con formelle di Murano Nero/Bianco/Rosso-Decorazioni oro/argento fogliai
Insert: All Glossy laquered with tiles of Murano Glass Black/White/Red-Decorations Gold/Silver foil

CUE RACK-BODY-R - GLASS EYES

Porta stecche per biliardo da 10-12 piedi con orologio al quarzo
Pool Cue Rack for 10-12 Feet with quarz clock

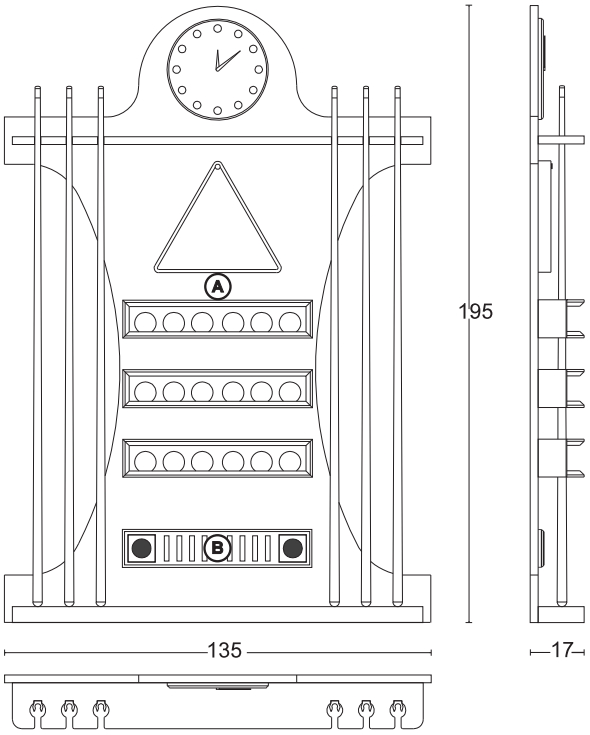

(A) Tutti i Laccato opaco - All Opaque laquered — **€ 5.250,30**

(B) Inserti: Tutte laccati opachi con formelle di Murano:
Nero/Bianco/Rosso-Decorazioni oro/argento fogliai
Insert: All Opaque laquered with tiles of Murano:
Glass Black/White/Red-Decorations Gold/Silver foil

(A) Tutti i Laccato lucido - All Glossy laquered — **€ 6.009,30**

(B) Inserti: Tutte laccati lucidi con formelle di Murano:
Nero/Bianco/Rosso-Decorazioni oro/argento fogliai
Insert: All Glossy laquered with tiles of Murano:
Glass Black/White/Red-Decorations Gold/Silver foil

- stecche in legno L.-Standard - da cm.160 (set 6 pezzi) - wooden Pool cue L.-Standard - cm. 160 (set 6 pieces) — **€ 2.428,80**
- Set biglie Ø 52,4 mm. Snooker inglese - Ø 57mm. per Pool americano - Ø 68 mm per Piramide russa — **€ 607,20**
  Set balls Ø 52,4 mm. english Snooker - Ø 57mm. American Pool - Ø 68 mm Russian Piramid

PLAY ROOM - POOL TABLE 8-9 FEET - GLASS EYES

8 piedi dimensioni campo gioco cm. 224 x 112 - Dimensioni esterne cm. 260 x 148 - Russo H. 80; Snooker inglese H. 80; Americano H. 78
8 Feet playng fiel dimention cm. 224 x 112 - External dimention cm. 260 x 148 - Russian H. 80; English Snooker H. 80; American H. 78
Con piano in ardesia 25 mm - With playground stone slate 25 mm

9 piedi dimensioni campo gioco cm. 254 x 112 - Dimensioni esterne cm. 290 x 163 - Russo H. 80; Snooker inglese H. 80; Americano H. 78
9 Feet playng fiel dimention cm. 254 x 127 - External dimention cm. 290 x 163 - Russian H. 80; English Snooker H. 80; American H. 78
Con piano in ardesia 25 mm - With playground stone slate 25 mm

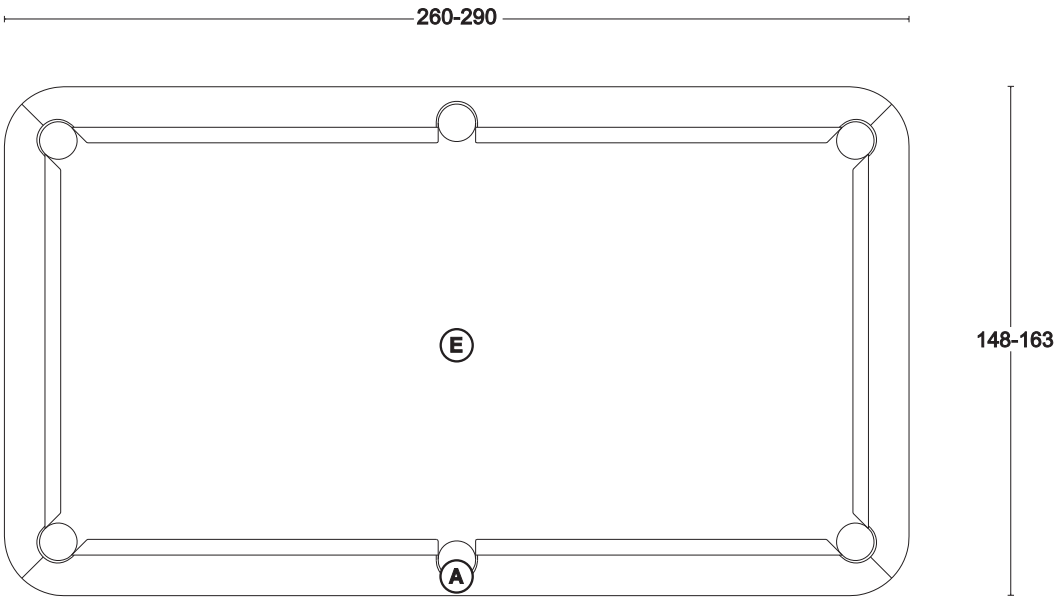

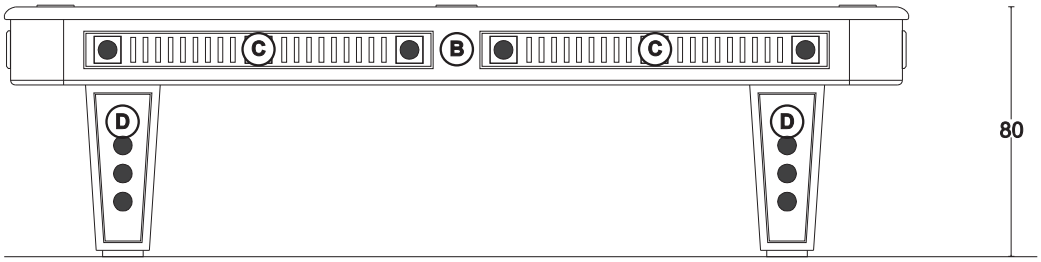

A+B+D Tutti i Laccato opaco — D Decorazioni: Oro/Argento foglia con formelle di Murano Nero/Bianco/Rosso
All Opaque laquered — D Decoration: Gold/Silver foil with tiles of Murano Glass Black/White/Red

C Inserti: Tutte laccati opachi con formelle di Murano Nero/Bianco/Rosso-Decorazioni oro/argento fogliai
Insert: All Opaque laquered with tiles of Murano Glass Black/White/Red-Decorations Gold/Silver foil

E Tappeto biliardo colori diversi - Pool table cloth different colours

8 PIEDI-8 FEET € 43.769,00
9 PIEDI-9 FEET € 43.769,00

A+B+D Tutti i Laccato lucido — D Decorazioni: Oro/Argento foglia con formelle di Murano Nero/Bianco/Rosso
All Glossy laquered — D Decoration: Gold/Silver foil with tiles of Murano Glass Black/White/Red

C Inserti: Tutte laccati lucidi con formelle di Murano Nero/Bianco/Rosso-Decorazioni oro/argento fogliai
Insert: All Glossy laquered with tiles of Murano Glass Black/White/Red-Decorations Gold/Silver foil

E Tappeto biliardo colori diversi - Pool table cloth different colours

8 PIEDI-8 FEET € 44.781,00
9 PIEDI-9 FEET € 44.781,00

PLAY ROOM - POOL LAMP 8-9 FEET - GLASS EYES

Lampada a LED per biliardo da 8-9 piedi - 130 Watt - peso kg. 70
LED Lamp for Pool 8-9 Feet - 130 Watt - Weight Kg. 70

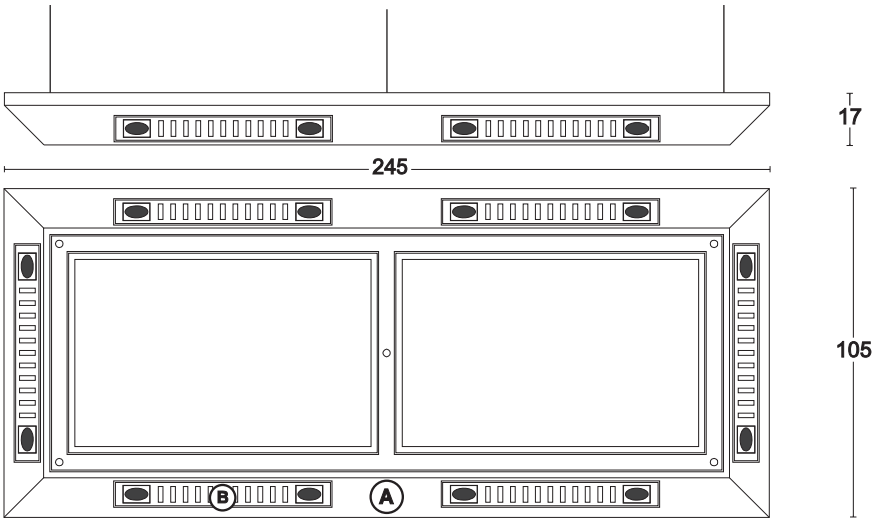

(A) Tutti i Laccato opaco — Decorazioni: Oro/Argento foglia — **€ 9.740,50**
All Opaque laquered — Decoration: Gold/Silver foil

(B) Inserti: Tutte laccati opachi con formelle di Murano Nero/Bianco/Rosso-Decorazioni oro/argento fogliai
Insert: All Opaque laquered with tiles of Murano Glass Black/White/Red-Decorations Gold/Silver foil

(A) Tutti i Laccato lucido — Decorazioni: Oro/Argento foglia — **€ 10.499,50**
All Glossy laquered — Decoration: Gold/Silver foil

(B) Inserti: Tutte laccati lucidi con formelle di Murano Nero/Bianco/Rosso-Decorazioni oro/argento fogliai
Insert: All Glossy laquered with tiles of Murano Glass Black/White/Red-Decorations Gold/Silver foil

CUE RACK-BODY-A - GLASS EYES

Porta stecche per biliardo da 8-9 piedi con orologio al quarzo
Pool Cue Rack for 8-9 Feet with quarz clock

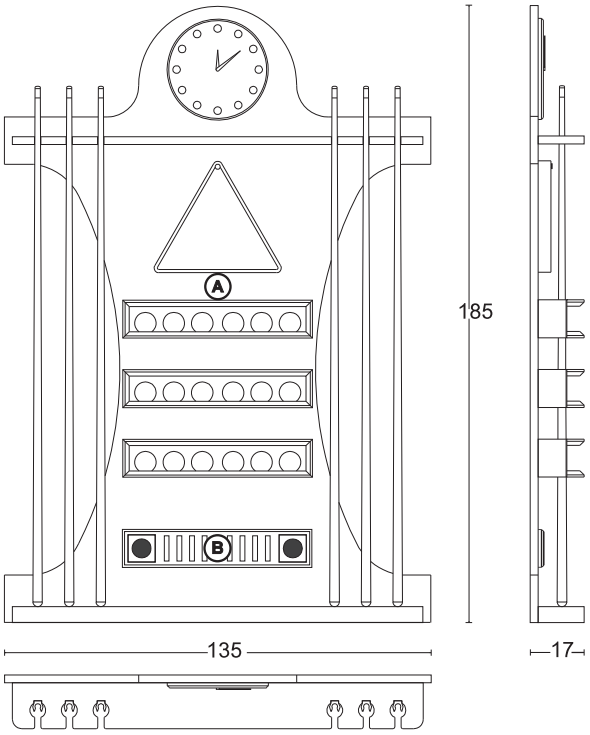

(A) Tutti i Laccato opaco - All Opaque laquered — **€ 5.250,30**

(B) Inserti: Tutte laccati opachi con formelle di Murano:
Nero/Bianco/Rosso-Decorazioni oro/argento fogliai
Insert: All Opaque laquered with tiles of Murano:
Glass Black/White/Red-Decorations Gold/Silver foil

(A) Tutti i Laccato lucido - All Glossy laquered — **€ 6.009,30**

(B) Inserti: Tutte laccati lucidi con formelle di Murano:
Nero/Bianco/Rosso-Decorazioni oro/argento fogliai
Insert: All Glossy laquered with tiles of Murano:
Glass Black/White/Red-Decorations Gold/Silver foil

- stecche in legno L.-Standard - da cm.145 (set 6 pezzi) - wooden Pool cue L.-Standard - cm. 145 (set 6 pieces) — **€ 1.821,60**
- Set biglie Ø 52,4 mm. Snooker inglese - Ø 57mm. per Pool americano - Ø 68 mm per Piramide russa — **€ 607,20**
  Set balls Ø 52,4 mm. english Snooker - Ø 57mm. American Pool - Ø 68 mm Russian Piramid

GOLD/SILVER EYES 186 > 223

VISMARADESIGN®

TV - LIFT & FIRE - 158 - GOLD/SILVER EYES

Struttura per Home Cinema - a parete (con salita TV motorizzata computerizzata e telecomandata - completo di Bio-Camino ecologico)
Home Cinema - Wall Rack (motorized, computerized and remote-controlled TV lift system - provided with ecological bio-fireplace)

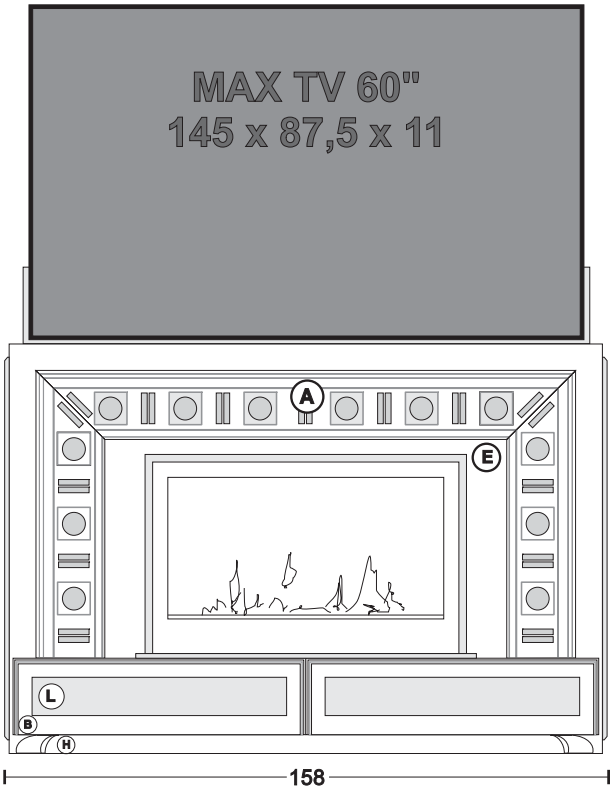

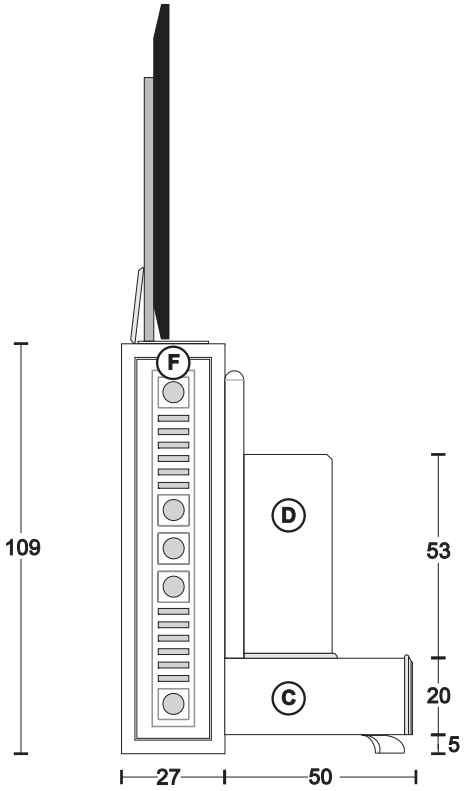

Finiture e combinazioni - Finishings and combinations

A + F Metalblack/Crema+formelle Murano:Oro 24 Kt
(Metalblack/Cream+Murano Glass:Gold 24 Kt)

B + C + D + E Tutti i laccati opachi - decorazioni oro foglia
(all opaque laquering - gold foil decorations)

H Oro foglia
(Gold foil)

L Vetri:Bianco/Fume
(glass white or fume)

€ 20.482,00

A + F Nero/Bianco +formelle Murano:puro Argento
(White/Black+Murano Glass:Pure Silver)

B + C + D + E Nero/Bianco opaco - decorazioni argento foglia
(opaque Black/White - silver foil decorations)

H Argento foglia
(Silver foil)

L Vetri:Bianco/Fume
(glass white or fume)

€ 19.976,00

TV - LIFT & BAR - 158 - GOLD/SILVER EYES

Struttura per Home Cinema - a parete (con salita TV motorizzata computerizzata e telecomandata - completo di Mobile a 3 ante push)
Home Cinema - Wall Rack (with motorized, computerized and remote-controlled TV lift system - provided with a 3 push-doors cabinet)

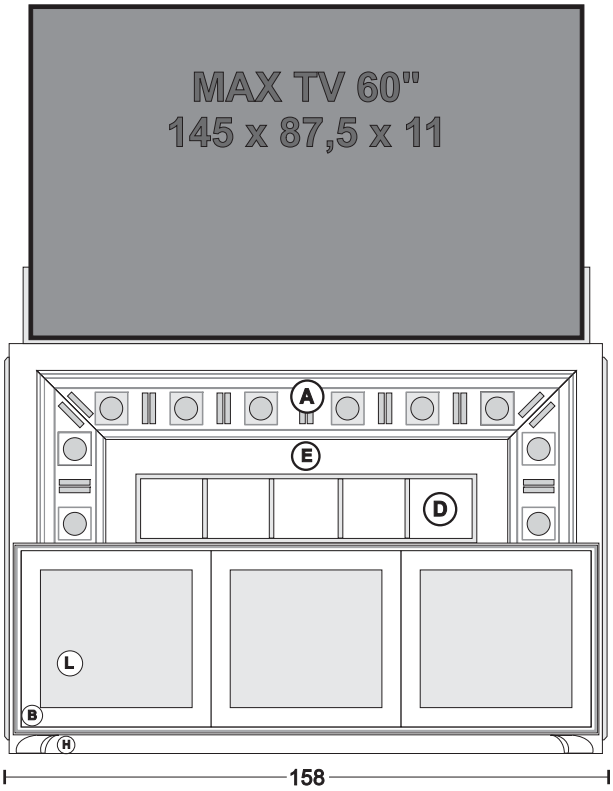

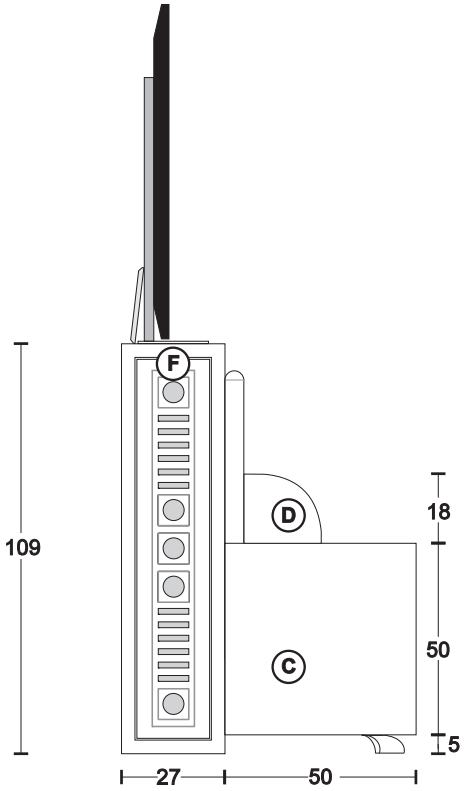

Finiture e combinazioni - Finishings and combinations

Ⓐ+Ⓕ Metalblack/Crema+formelle Murano:Oro 24 Kt
(Metalblack/Cream+Murano Glass:Gold 24 Kt)

Ⓑ+Ⓒ+Ⓓ+Ⓔ Tutti i laccati opachi - decorazioni oro foglia
(all opaque laquering - gold foil decorations)

Ⓗ Oro foglia
(Gold foil)

Ⓛ Vetri:Bianco/Fume
(glass white or fume)

€ 18.620,80

Ⓐ+Ⓕ Nero/Bianco +formelle Murano:puro Argento
(White/Black+Murano Glass:Pure Silver)

Ⓑ+Ⓒ+Ⓓ+Ⓔ Nero/Bianco opaco - decorazioni argento foglia
(opaque Black/White - silver foil decorations)

Ⓗ Argento foglia
(Silver foil)

Ⓛ Vetri:Bianco/Fume
(glass white or fume)

€ 18.177,50

TV - LIFT & FIRE - 182 - GOLD/SILVER EYES

Struttura per Home Cinema - a parete (con salita TV motorizzata computerizzata e telecomandata - completo di Bio-Camino ecologico)
Home Cinema - Wall Rack (motorized, computerized and remote-controlled TV lift system - provided with ecological bio-fireplace)

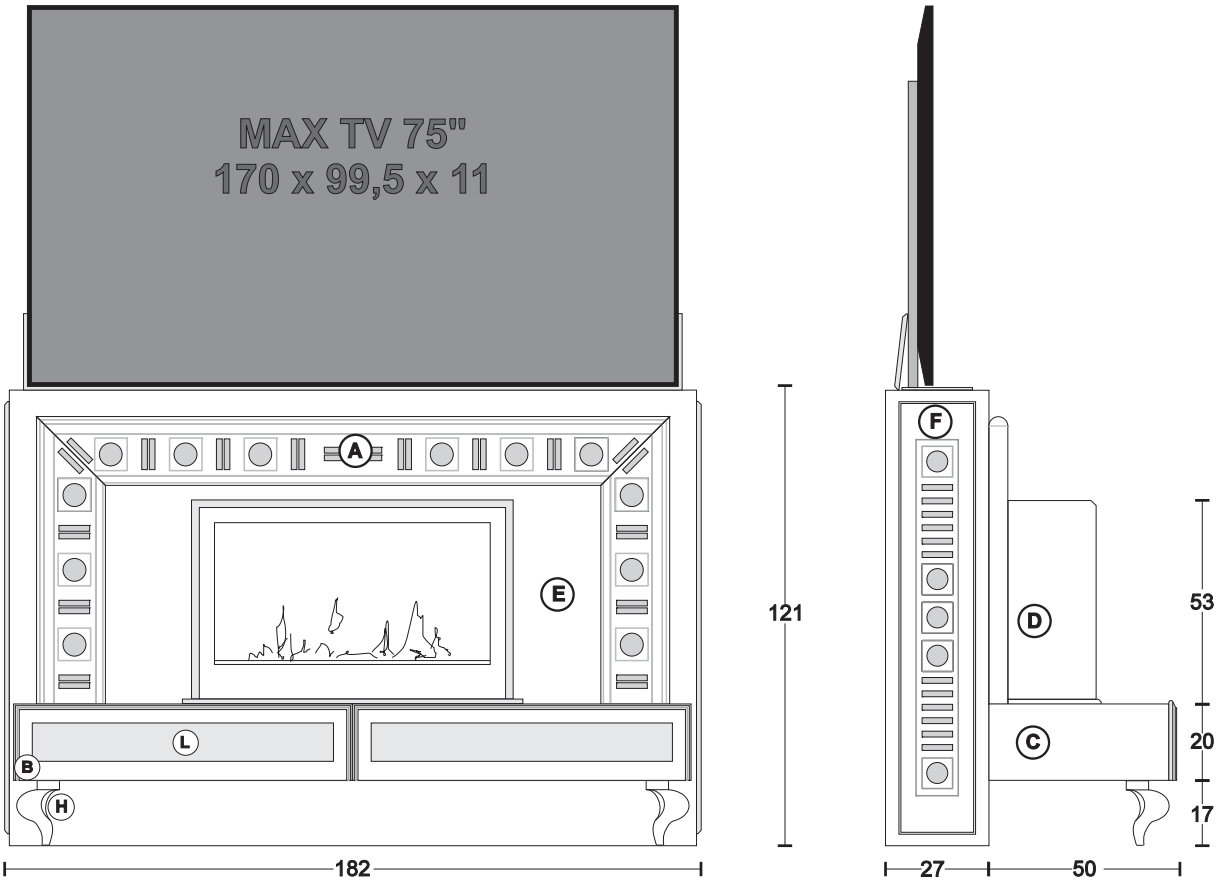

Finiture e combinazioni - Finishings and combinations

Ⓐ+Ⓕ Metalblack/Crema+formelle Murano:Oro 24 Kt
(Metalblack/Cream+Murano Glass:Gold 24 Kt)

Ⓑ+Ⓒ+Ⓓ+Ⓔ Tutti i laccati opachi - decorazioni oro foglia
(all opaque laquering - gold foil decorations)

Ⓗ Oro foglia
(Gold foil)

Ⓛ Vetri:Bianco/Fume
(glass white or fume)

€ 20.872,50

Ⓐ+Ⓕ Nero/Bianco +formelle Murano:puro Argento
(White/Black+Murano Glass:Pure Silver)

Ⓑ+Ⓒ+Ⓓ+Ⓔ Nero/Bianco opaco - decorazioni argento foglia
(opaque Black/White - silver foil decorations)

Ⓗ Argento foglia
(Silver foil)

Ⓛ Vetri:Bianco/Fume
(glass white or fume)

€ 20.366,50

TV - LIFT & BAR - 182 - GOLD/SILVER EYES

Struttura per Home Cinema - a parete (con salita TV motorizzata computerizzata e telecomandata - completo di Mobile a 4 ante push)
Home Cinema - Wall Rack (with motorized, computerized and remote-controlled TV lift system - provided with a 4 push-doors cabinet)

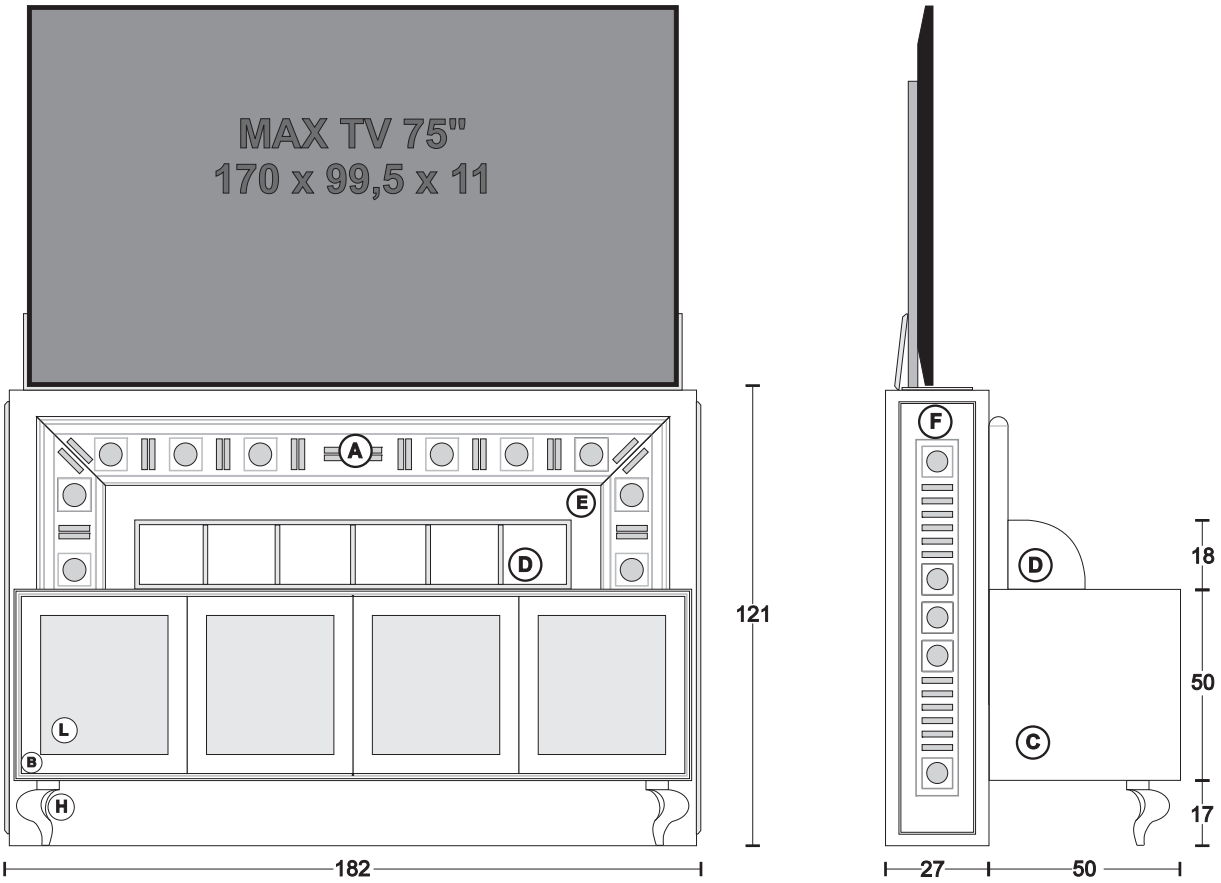

Finiture e combinazioni - Finishings and combinations

Ⓐ+Ⓕ Metalblack/Crema+formelle Murano:Oro 24 Kt
(Metalblack/Cream+Murano Glass:Gold 24 Kt)

Ⓑ+Ⓒ+Ⓓ+Ⓔ Tutti i laccati opachi - decorazioni oro foglia
(all opaque laquering - gold foil decorations)

Ⓗ Oro foglia
(Gold foil)

Ⓛ Vetri:Bianco/Fume
(glass white or fume)

€ 19.112,50

Ⓐ+Ⓕ Nero/Bianco +formelle Murano:puro Argento
(White/Black+Murano Glass:Pure Silver)

Ⓑ+Ⓒ+Ⓓ+Ⓔ Nero/Bianco opaco - decorazioni argento foglia
(opaque Black/White - silver foil decorations)

Ⓗ Argento foglia
(Silver foil)

Ⓛ Vetri:Bianco/Fume
(glass white or fume)

€ 18.672,50

SLIDING HOME CINEMA - GOLD-SILVER EYES

Struttura per Home Cinema - a parete con apertura motorizzata, computerizzata e telecomandata - luci led laterali
Home Cinema - Wall Rack - Motorized and computerized opening, with remote control - LED lights on sides

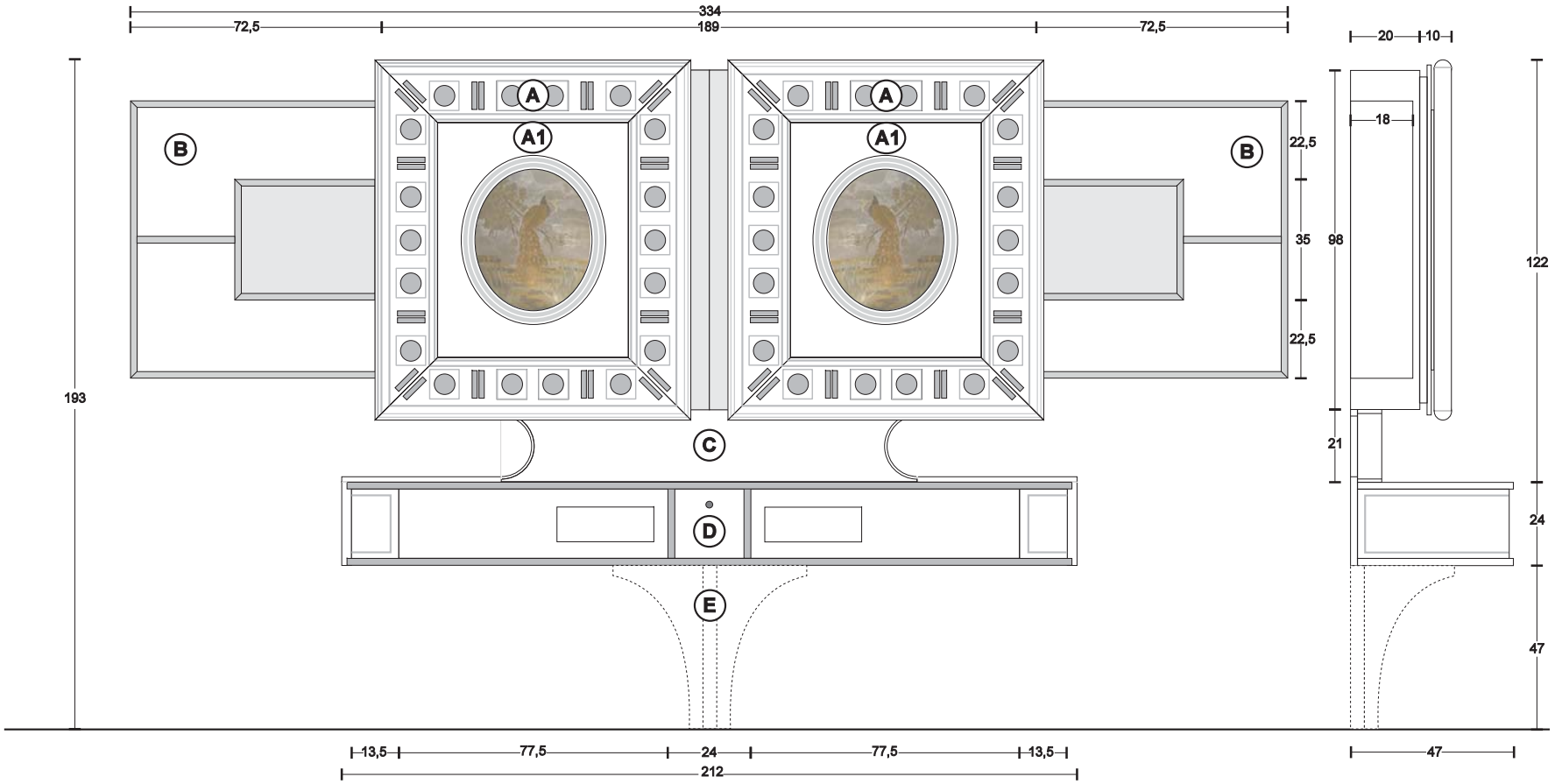

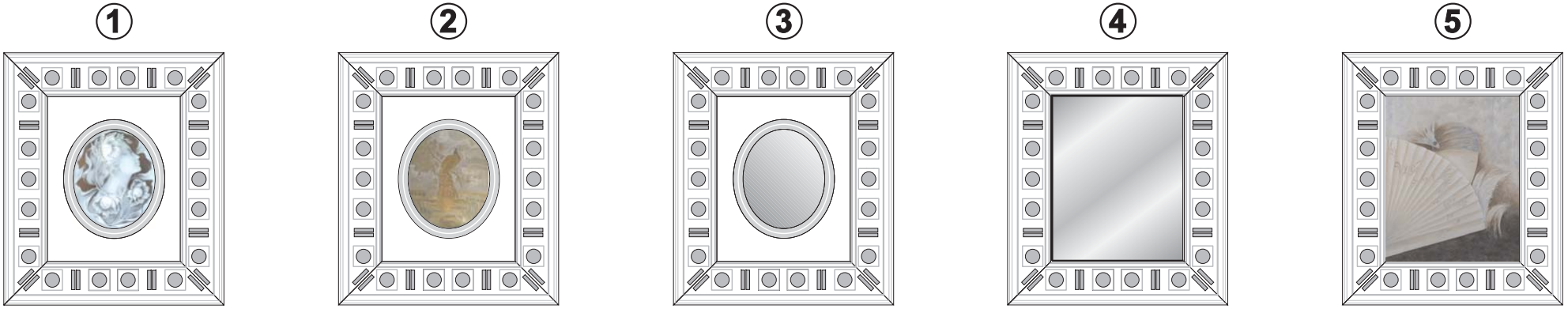

SLIDING HOME CINEMA - GOLD-SILVER EYES

Struttura per Home Cinema - a parete con apertura motorizzata, computerizzata e telecomandata - luci led laterali
Home Cinema - Wall Rack - Motorized and computerized opening, with remote control - LED lights on sides

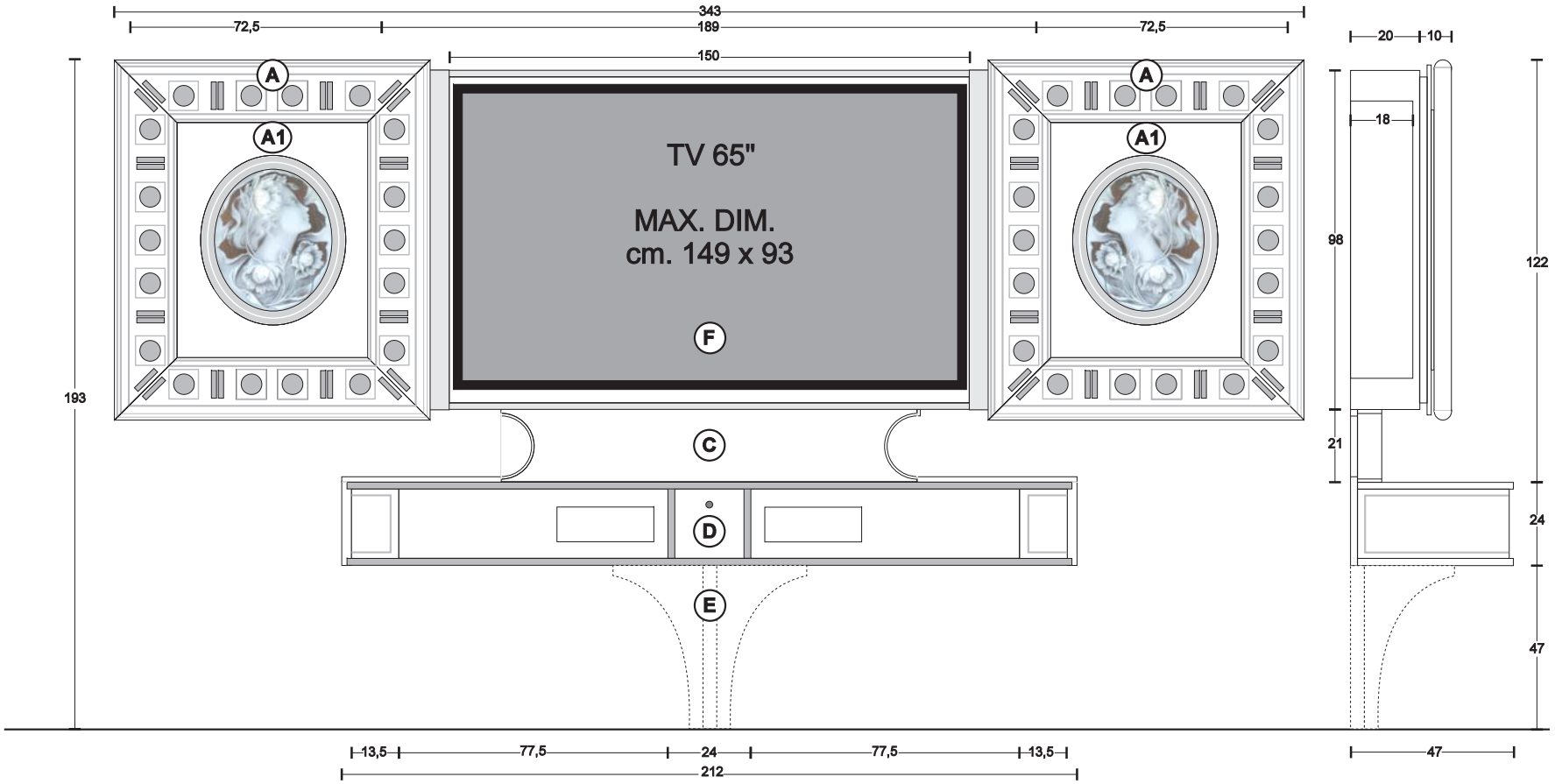

(A) M.black/Crema-formelle Murano:oro 24 kt (A1) + (C) + (E) + (F) Tutti i laccati opachi
Metalblack/Cream-Murano Glass: Gold 24 kt all opaque laquering

(B) Tutti i laccati opachi-Decorazioni Oro Foglia
all opaque laquering-decoration gold foil

(D) Top Oro Foglia-parti rimanenti
tutti i laccati opachi-Decorazioni Oro
Top gold foil-remaining parts all opaque laquering-
decoration gold foil

Con-with (1) EURO 27.462,60 Con-with (2) EURO 30.764,80 Con-with (3) EURO 26.805,90 Con-with (4) EURO 26.831,20 Con-with (5) EURO 27.961,40

(A) M.black/bianco-formelle Murano:puro arg. (A1) + (C) + (E) + (F) Tutti i laccati opachi
Metalblack/White-Murano Glass: pure Silver all opaque laquering

(B) Tutti i laccati opachi-Decorazioni Argento Foglia
all opaque laquering-decorationsilver foil

(D) Top Argento Foglia-parti rimanenti
tutti i laccati opachi-Decorazioni Argento Foglia
Top silver foil-remaining parts all opaque laquering-
decoration silver foil

Con-with (1) EURO 26.413,20 Con-with (2) EURO 29.715,40 Con-with (3) EURO 25.755,40 Con-with (4) EURO 25.780,70 Con-with (5) EURO 26.640,90

REVOLVING HOME CINEMA - GOLD-SILVER EYES

Struttura per Home Cinema - centro stanza con rotazione TV motorizzata, computerizzata e telecomandata
Home Cinema - Standing rack - Motorized and computerized revolving TV , with remote control

LATO -SIDE "A"

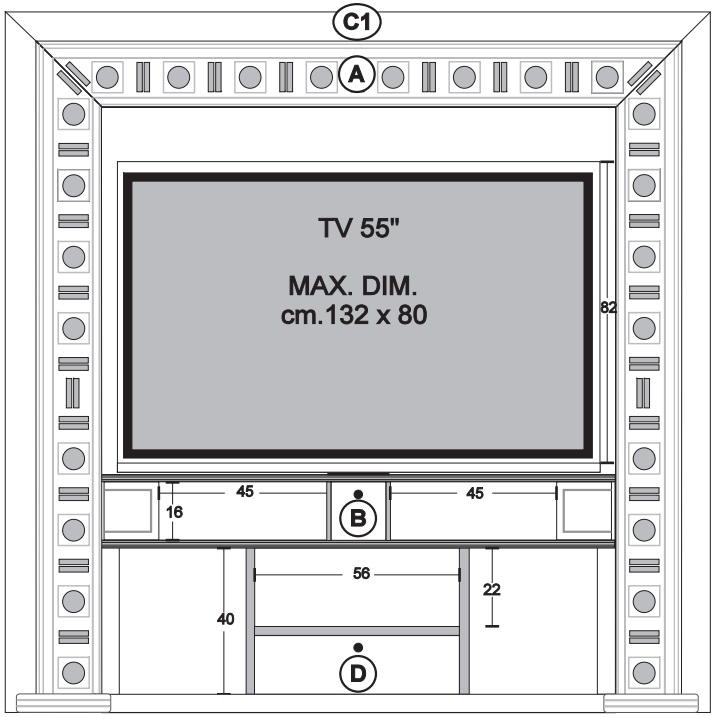

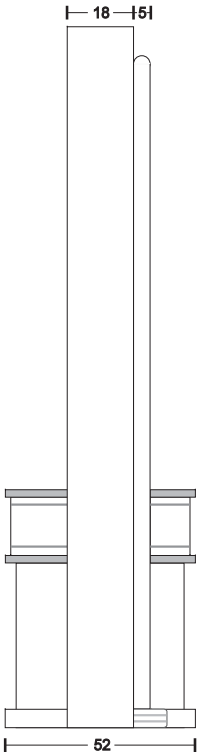

LATO -SIDE "B"

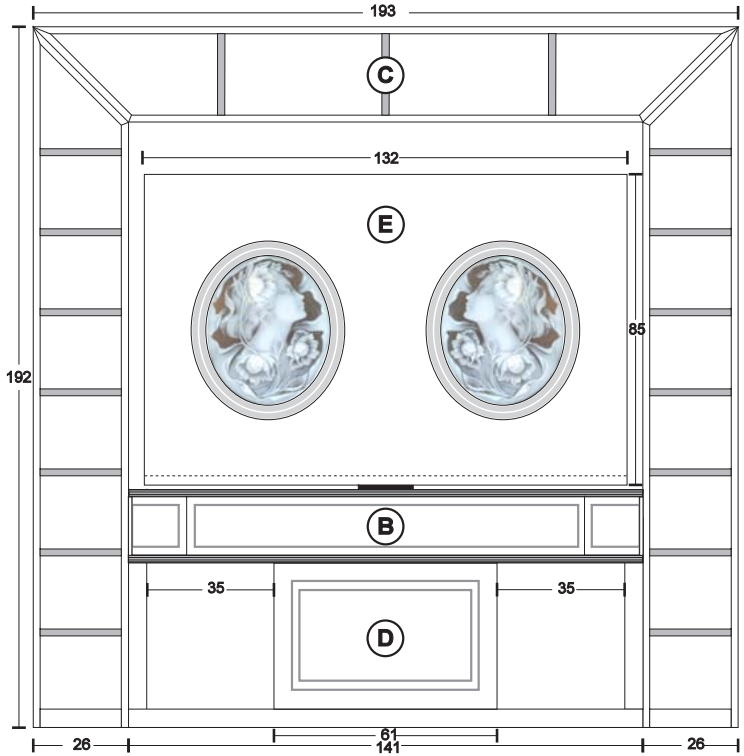

REVOLVING HOME CINEMA - GOLD-SILVER EYES

Struttura per Home Cinema - centro stanza con rotazione TV motorizzata, computerizzata e telecomandata
Home Cinema - Standing rack - Motorized and computerized revolving TV , with remote control

DECORAZIONE PANNELLO LATO "B" -DECORATION PANEL SIDE "B"

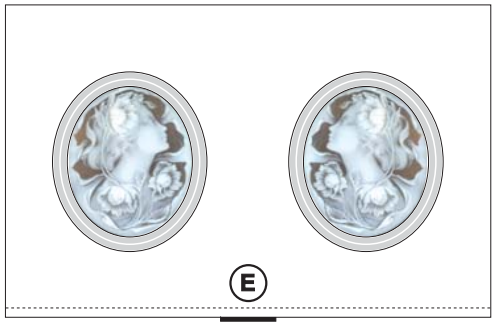

1 ovale con Cammeo
Oval with Cameo

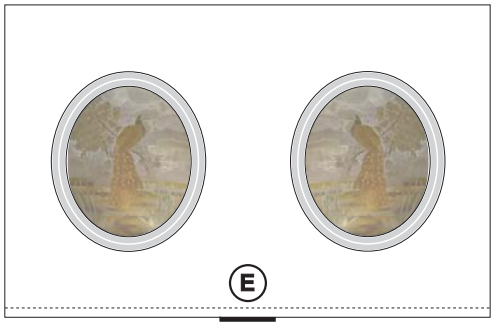

2 Ovale con Pavone Artistico oro 23/22/20/18/16/12 Carati
Oval with Artistic peacock Gold 23/22/20/18/16/12 carats

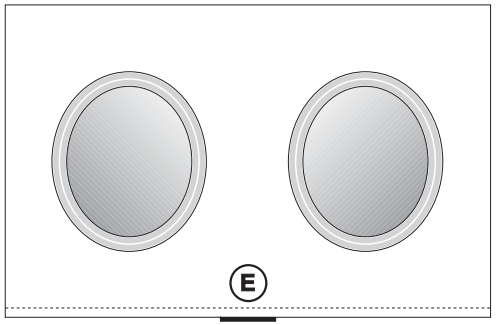

3 Ovale con specchio bisellato
Oval with bevelled mirror

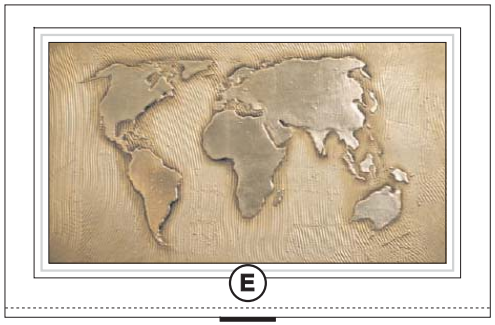

4 "Il Mondo" decorazione in rilievo in foglia platino
"The world" decoration in relief - platinum foil

A Metalblack/crema-formelle Murano:oro 24 kt
Metalblack/Cream-Murano Glass: Gold 24 kt

C1+C+E+D Tutti i laccati opachi-Decorazioni Oro
all opaque laquering-decoration gold

B Oro Foglia/tutti i laccati opachi
Gold foil all opaque laquering

Con-with 1 EURO 18.516,30

Con-with 2 EURO 21.967,00

Con-with 3 EURO 17.928,90

Con-with 4 EURO 19.459,00

A Nero/bianco-formelle Murano:puro argen.
Black/White-Murano Glass: pure Silver

C1+C+E+D Bianco/Nero opaco-Decorazioni Argento
opaque White/Black-decoration silver foil

B Argento Foglia/tutti i laccati opachi
Silver foil all opaque laquering

Con-with 1 EURO 17.917,90

Con-with 2 EURO 21.369,70

Con-with 3 EURO 17.332,70

Con-with 4 EURO 18.862,80

THE WALL HOME CINEMA - GOLD EYES - SILVER EYES

Struttura per Home Cinema - a parete
Home Cinema - Wall Rack

(H) (decorazioni argento/oro foglia)
(silver/gold foil decorations)

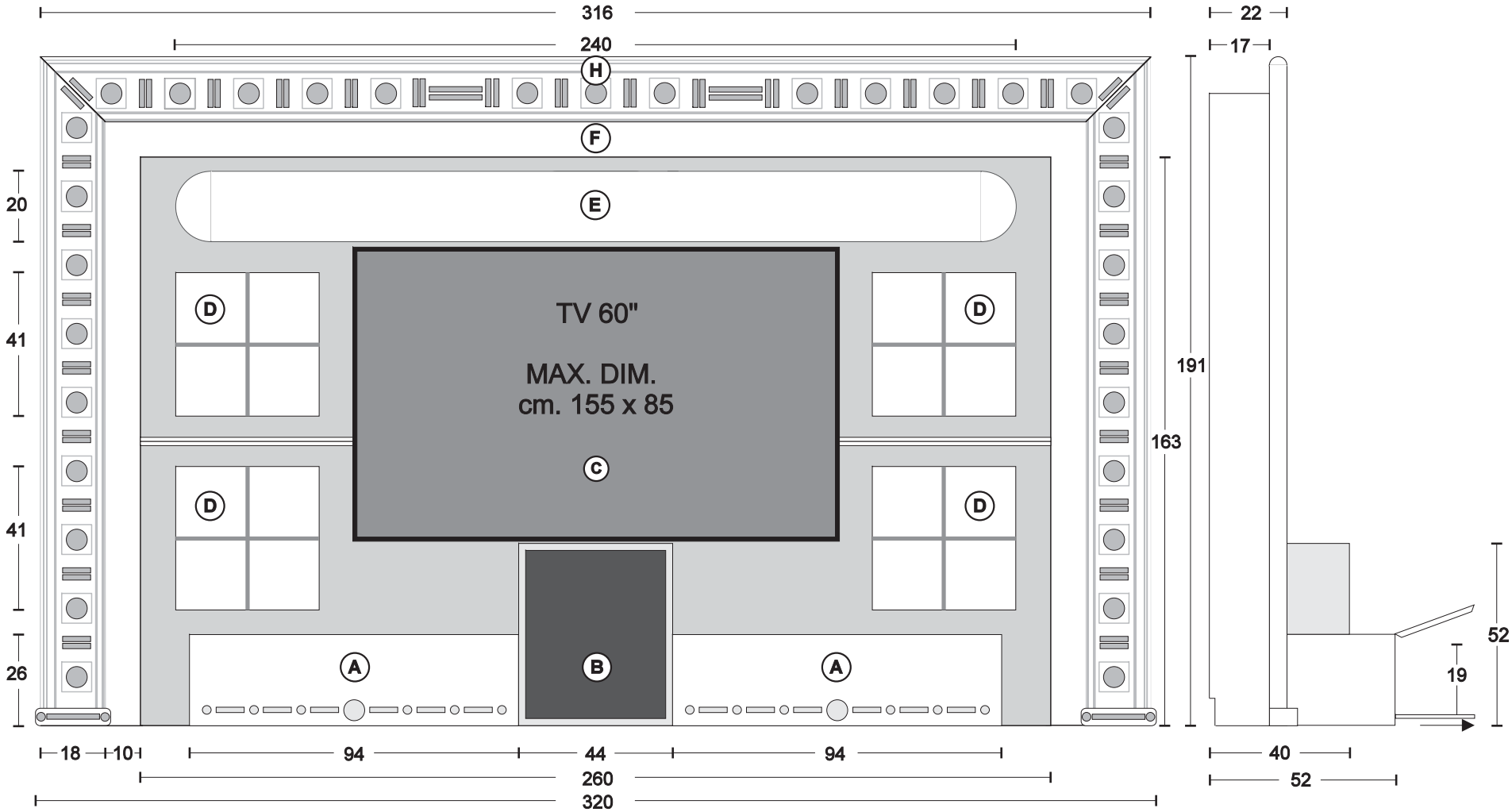

B+C	ORO FOGLIA (gold foil)	A+D+E+F	METALBLACK	H	METALBLACK: con formelle di **Murano** Oro 24 kt. Sandwich with tiles of **Murano** glass 24 kt. Gold Sandwich	**€ 18.593,30**
B+C	ARGENTO FOGLIA (silver foil)	A+D+E+F	METALBLACK	H	METALBLACK con formelle di **Murano** Puro Argento Sandwich with tiles of **Murano** glass Real Silver Sandwich	**€ 17.505,40**
B+C	ARGENTO FOGLIA (silver foil)	A+D+E+F	Nero/Bianco opaco Opaque Black/White	H	Bianco/Nero Lucido con formelle di **Murano** Puro Argento Sandwich Gloss White/Black with tiles of **Murano** glass Real Silver Sandwich	**€ 18.619,70**

THE FRAME HOME CINEMA - GOLD EYES - SILVER EYES

Struttura per Home Cinema - a parete (con luci retro-pannello diffuse)
Home Cinema - Wall Rack (with spreading back-panel lighting)

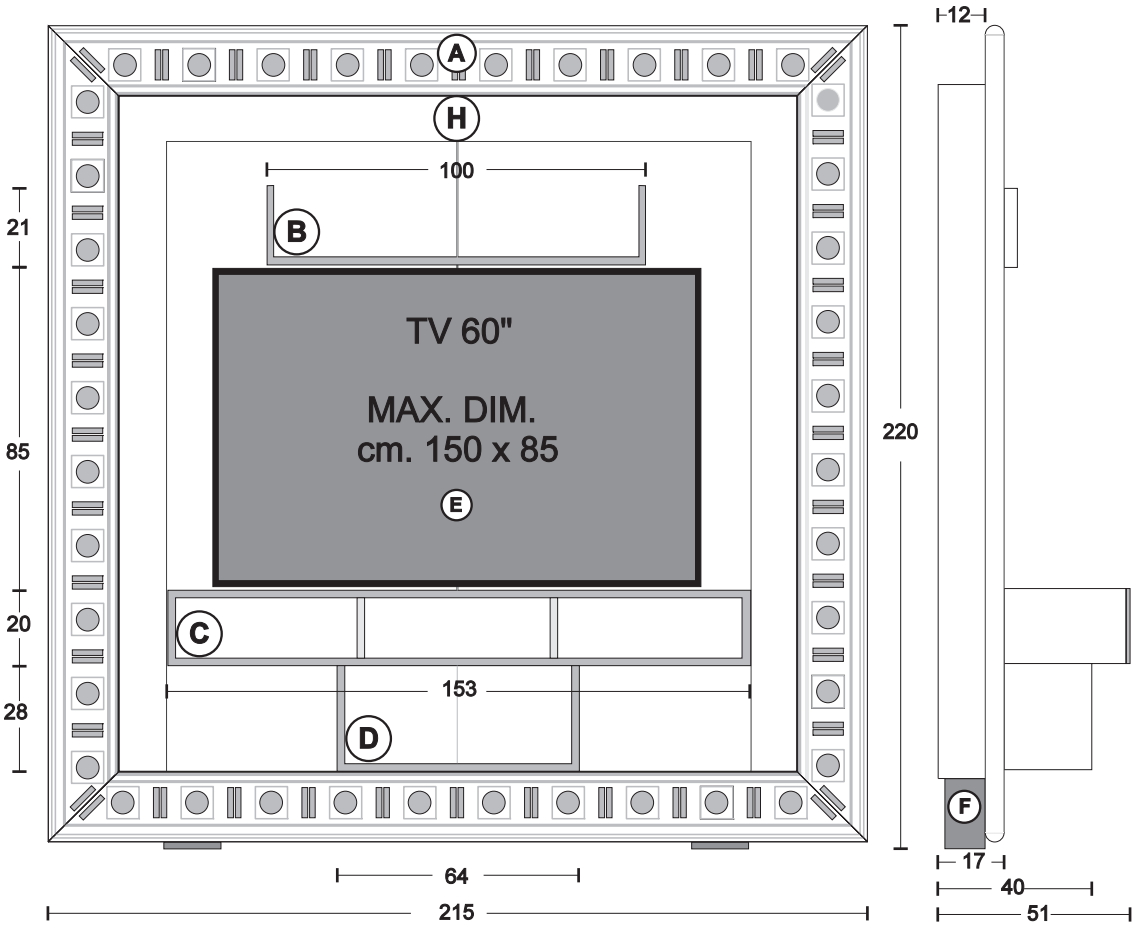

Finiture e combinazioni - Finishings and combinations

C ORO FOGLIA (gold foil) H METALGOLD	A Metalblack con formelle di **Murano** Oro 24 kt. Sandwich Goldfoil with tiles of **Murano** Glass Gold 24 kt. Sandwich (decorazioni oro foglia-gold foil decorations)	B+D+E+F	METALBLACK	**€ 12.397,00**
C ARGENTO FOGLIA (silver foil) H METALSILVER	A Metalblack con formelle di **Murano** Puro argento sandwich Silverfoil with tiles of **Murano** Glass Real Silver Sandwich (decorazioni argento foglia-silver foil decorations)	B+D+E+F	METALBLACK	**€ 11.801,90**
C NERO LUCIDO (gloss black) H METALSILVER	A Nero lucido con formelle di **Murano** Puro argento sandwich Gloss black with tiles of **Murano** Glass Real Silver Sandwich (decorazioni argento foglia-silver foil decorations)	B+D+E+F	NERO Black	**€ 12.498,20**
C BIANCO LUCIDO (gloss white) H METALSILVER	A Bianco lucido con formelle di **Murano** argento sandwich Gloss white with tiles of **Murano** Glass Real Silver Sandwich (decorazioni argento foglia-silver foil decorations)	B+D+E+F	BIANCO White	**€ 12.498,20**

THE FRAME CONTAINER-BAR - GOLD/SILVER EYES

Mobile con scaffali a giorno e ante scorrevoli - a parete (con led bianchi sotto piani orizzontali) ① ② ③ ④
Open wall-container, with sliding doors- Horizontal shelves enlightened by white LEDs ① ② ③ ④

-Sezione
-Section

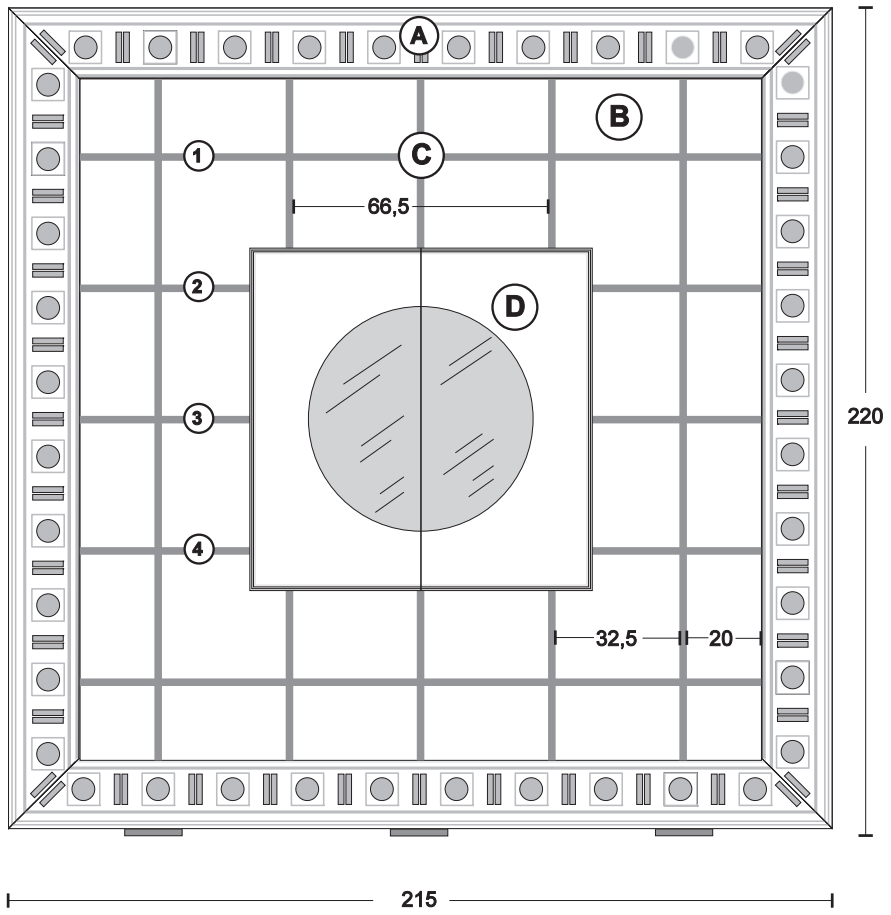

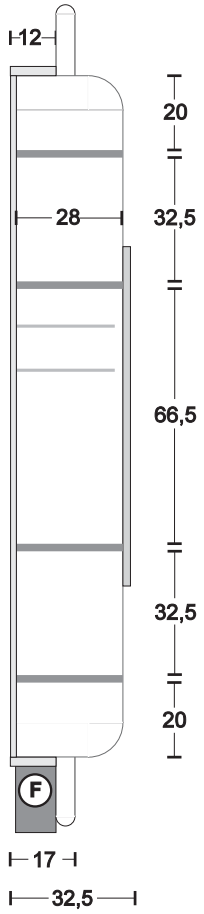

Finiture e combinazioni - Finishings and combinations

(A) Metalblack con formelle di **Murano** Oro 24 kt. Sandwich Metalblack with tiles of **Murano** Glass Gold 24 kt. Sandwich (decorazioni oro foglia-Gold foil decorations)	(B) ORO FOGLIA (gold foil)	(C)+(F)+(D) METALBLACK	**€ 16.024,80**
(A) Metalblack con formelle di **Murano** Puro argento sandwich Metalblack with tiles of **Murano** Glass Real Silver Sandwich (decorazioni argento foglia-silver foil decorations)	(B) ARGENTO FOGLIA (silver foil)	(C)+(F)+(D) METALBLACK	**€ 15.426,40**
(A) Nero lucido con formelle di **Murano** Puro argento sandwich gloss black with tiles of **Murano** Glass Real Silver Sandwich (decorazioni argento foglia-silver foil decorations)	(B) ARGENTO FOGLIA (silver foil)	(C)+(F) NERO (black) (D) NERO LUCIDO (gloss black)	**€ 16.122,70**
(A) Bianco lucido con formelle di **Murano** Puro argento sandwich gloss white with tiles of **Murano** Glass Real Silver Sandwich (decorazioni argento foglia-silver foil decorations)	(B) ARGENTO FOGLIA (silver foil)	(C)+(F) BIANCO (white) (D) BIANCO LUCIDO (gloss white)	**€ 16.122,70**

THE FRAME "BIG MIRROR" - GOLD/SILVER EYES

Specchio a parete completo di consolle a 2 cassetti e vano a giorno - led bianchi perimetrali - bolle perimetrali su specchio
Wall-mirror with 2-drawer-consolle and open compartment- white leds on perimeter- bubbles on mirror border

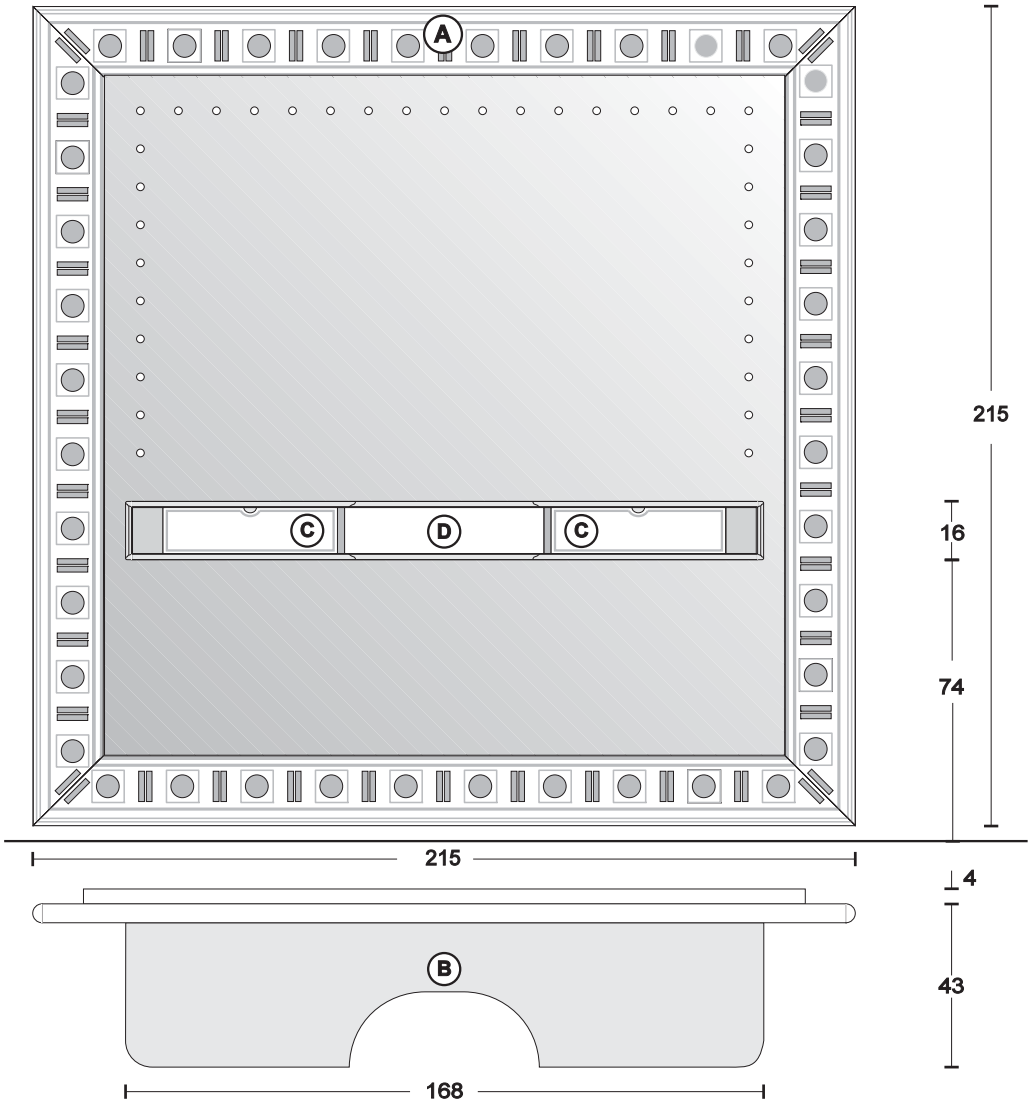

Finiture e combinazioni - Finishings and combinations

(A) Metalblack con formelle di **Murano** Oro 24 kt. Sandwich Metalblack with tiles of **Murano** Glass Gold 24 kt. Sandwich (decorazioni oro foglia-gold foil decorations)	(B) ORO FOGLIA (gold foil)	(C)+(D) METALBLACK	**€ 11.058,30**
(A) Metalblack con formelle di **Murano** Puro argento sandwich Metalblack with tiles of **Murano** Glass Real Silver Sandwich (decorazioni argento foglia-silver foil decorations)	(B) ARGENTO FOGLIA (silver foil)	(C)+(D) METALBLACK	**€ 10.613,90**
(A) Nero lucido con formelle di **Murano** Puro argento sandwich gloss black with tiles of **Murano** Glass Real Silver Sandwich (decorazioni argento foglia-silver foil decorations)	(B) ARGENTO FOGLIA (silver foil)	(C) NERO LUCIDO (gloss black) (D) NERO (black)	**€ 11.311,30**
(A) Bianco lucido con formelle di **Murano** Puro argento sandwich gloss white with tiles of **Murano** Glass Real Silver Sandwich (decorazioni argento foglia-silver foil decorations)	(B) ARGENTO FOGLIA (silver foil)	(C) BIANCO LUCIDO (gloss white) (D) BIANCO (white)	**€ 11.311,30**

STAR GATE - GOLD-SILVER EYES

Struttura per Home Cinema - a parete (con luci retro-pannello diffuse)
Home Cinema - Wall Rack (with spreading back-panel lighting)

-Sezione
-Section

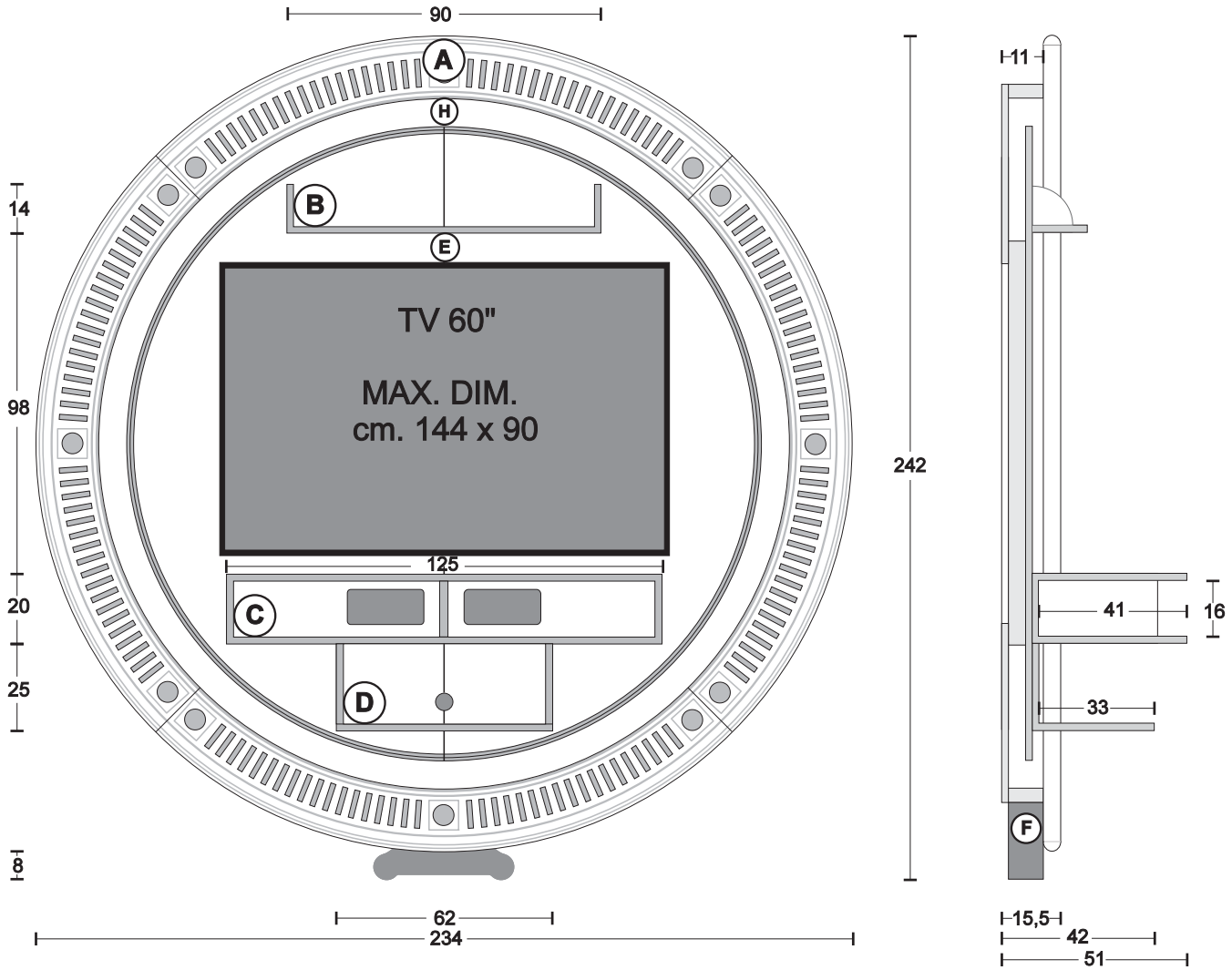

Finiture e combinazioni - Finishings and combinations

(C) ORO FOGLIA (gold foil) (H) METALGOLD	(A) Metalblack con formelle di **Murano** Oro 24 kt. Sandwich Metalblack with tiles of **Murano** Glass Gold 24 kt. Sandwich (decorazioni oro foglia-gold foil decorations)	(B)+(D)+(E)+(F)	METALBLACK	**€ 15.117,30**
(C) ARGENTO FOGLIA (silver foil) (H) METALSILVER	(A) Metalblack con formelle di **Murano** Puro argento sandwich Metalblack with tiles of **Murano** Glass Real Silver Sandwich (decorazioni argento foglia-silver foil decorations)	(B)+(D)+(E)+(F)	METALBLACK	**€ 14.592,60**
(C) NERO LUCIDO (gloss black) (H) METALSILVER	(A) Nero lucido con formelle di **Murano** Puro argento sandwich Gloss black with tiles of **Murano** Glass Real Silver Sandwich (decorazioni argento foglia-silver foil decorations)	(B)+(D)+(E)+(F)	NERO Black	**€ 15.427,50**
(C) BIANCO LUCIDO (gloss white) (H) METALSILVER	(A) Bianco lucido con formelle di **Murano** argento sandwich Gloss white with tiles of **Murano** Glass Real Silver Sandwich (decorazioni argento foglia-silver foil decorations)	(B)+(D)+(E)+(F)	BIANCO White	**€ 15.427,50**

STAR GATE CONTAINER-BAR - GOLD/SILVER EYES

Mobile con scaffali a giorno e ante scorrevoli - a parete (con led bianchi sotto piani orizzontali) ①②③④
Open wall-container, with sliding doors- Horizontal shelves enlightened by white LEDs ①②③④

-Sezione
-Section

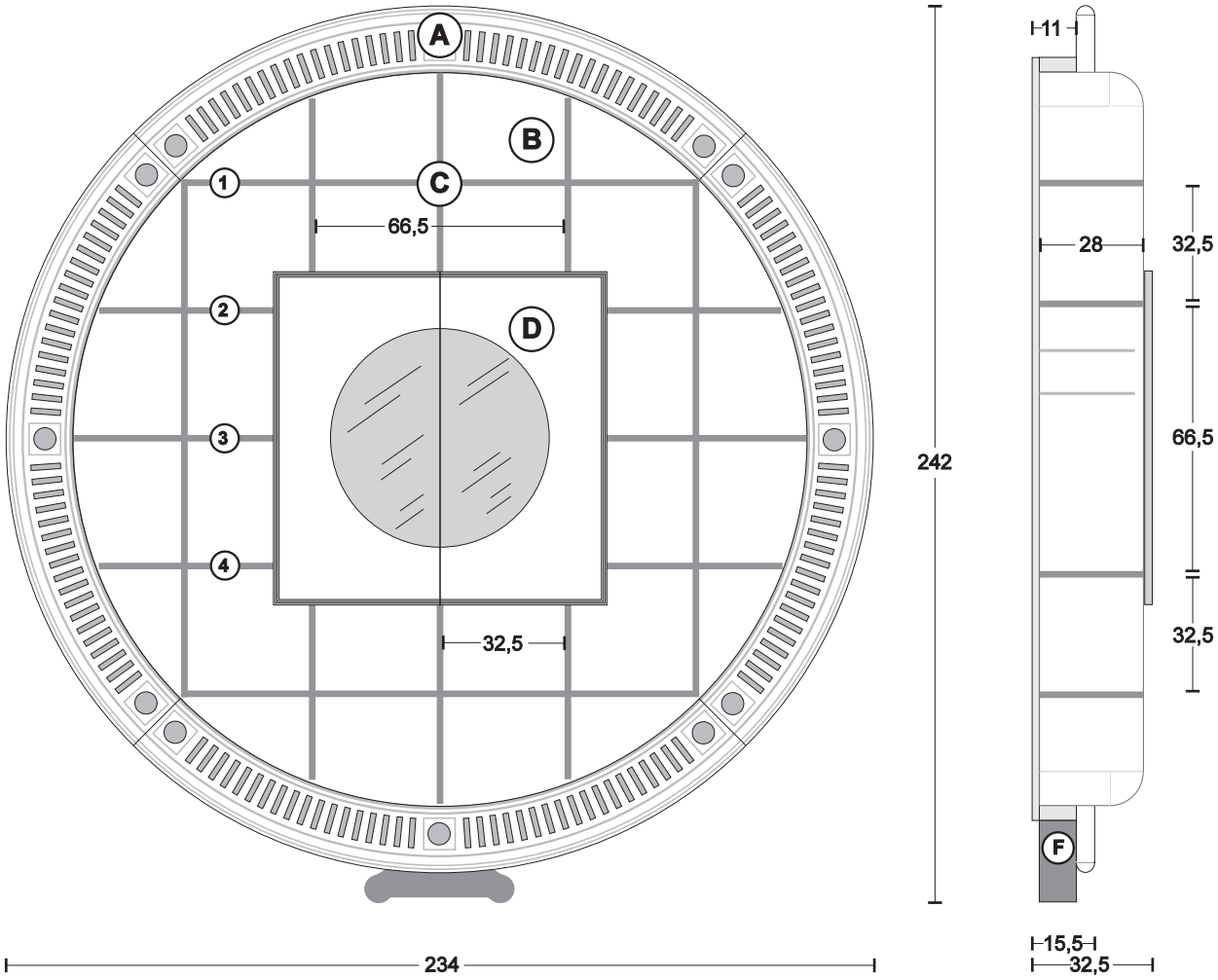

Finiture e combinazioni - Finishings and combinations

(A) Metalblack con formelle di **Murano** Oro 24 kt. Sandwich Metalblack with tiles of **Murano** Glass Gold 24 kt. Sandwich (decorazioni oro foglia-gold foil decorations)	(B) ORO FOGLIA (gold foil)	(C)+(F)+(D)	METALBLACK	**€ 18.747,30**
(A) Metalblack con formelle di **Murano** Puro argento sandwich Metalblack with tiles of **Murano** Glass Real Silver Sandwich (decorazioni argento foglia-silver foil decorations)	(B) ARGENTO FOGLIA (silver foil)	(C)+(F)+(D)	METALBLACK	**€ 18.213,80**
(A) Nero lucido con formelle di **Murano** Puro argento sandwich gloss black with tiles of **Murano** Glass Real Silver Sandwich (decorazioni argento foglia-silver foil decorations)	(B) ARGENTO FOGLIA (silver foil)	(C)+(F) (D)	NERO (black) NERO LUCIDO (gloss black)	**€ 18.910,10**
(A) Bianco lucido con formelle di **Murano** Puro argento sandwich gloss white with tiles of **Murano** Glass Real Silver Sandwich (decorazioni argento foglia-silver foil decorations)	(B) ARGENTO FOGLIA (silver foil)	(C)+(F) (D)	BIANCO (white) BIANCO LUCIDO (gloss white)	**€ 18.910,10**

STAR GATE "BIG MIRROR" - GOLD/SILVER EYES

Specchio a parete completo di consolle a 2 cassetti e vano a giorno - led bianchi perimetrali - bolle perimetrali su specchio
Wall-mirror with 2-drawer-consolle and open compartment- white leds on perimeter- bubbles on mirror border

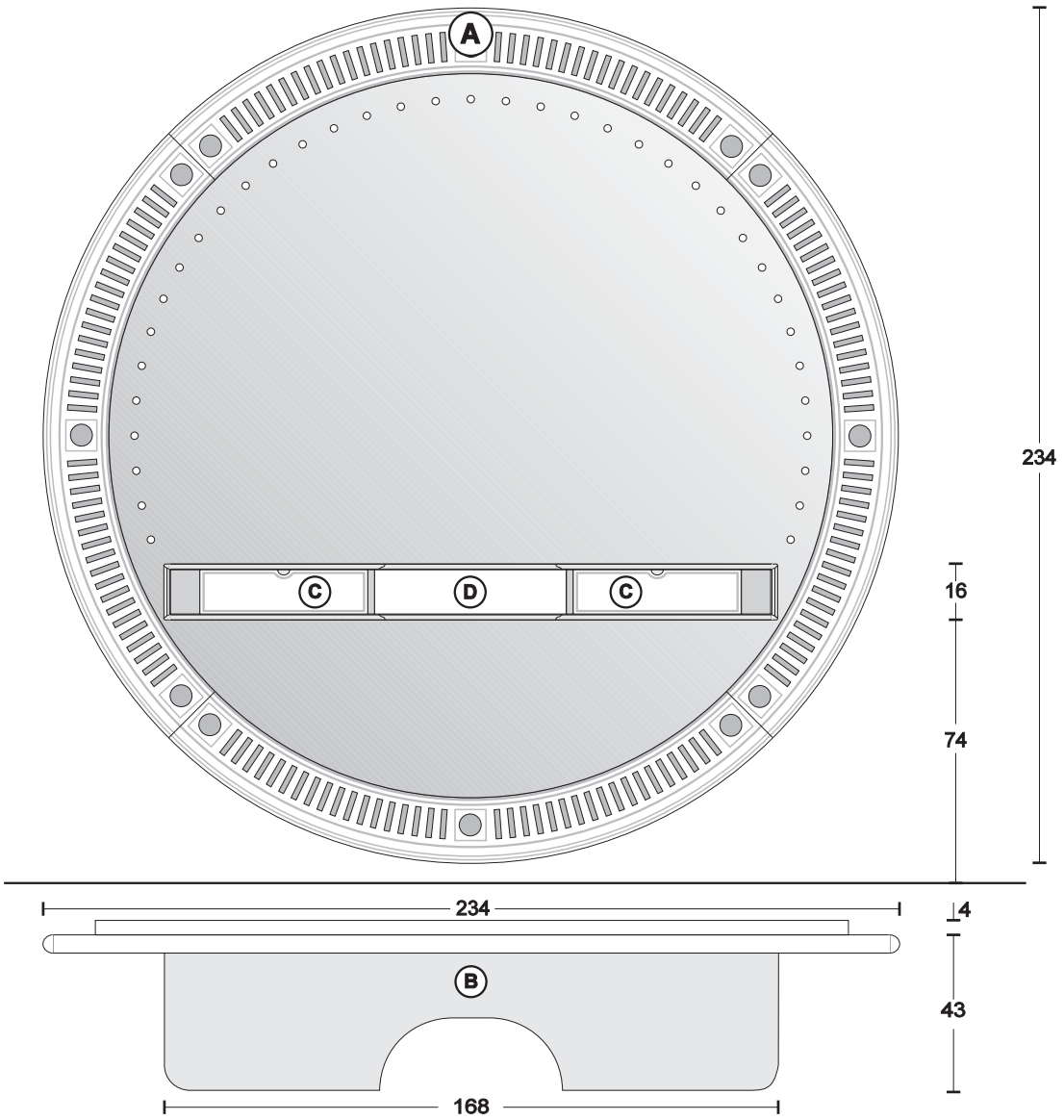

Finiture e combinazioni - Finishings and combinations

(A) Metalblack con formelle di **Murano** Oro 24 kt. Sandwich Metalblack with tiles of **Murano** Glass Gold 24 kt. Sandwich (decorazioni oro foglia-gold foil decorations)	(B) ORO FOGLIA (gold foil)	(C)+(D) METALBLACK	**€ 12.023,00**
(A) Metalblack con formelle di **Murano** Puro argento sandwich Metalblack with tiles of **Murano** Glass Real Silver Sandwich (decorazioni argento foglia-silver foil decorations)	(B) ARGENTO FOGLIA (silver foil)	(C)+(D) METALBLACK	**€ 11.770,00**
(A) Nero lucido con formelle di **Murano** Puro argento sandwich gloss black with tiles of **Murano** Glass Real Silver Sandwich (decorazioni argento foglia-silver foil decorations)	(B) ARGENTO FOGLIA (silver foil)	(C) NERO LUCIDO (gloss black) (D) NERO (black)	**€ 12.470,70**
(A) Bianco lucido con formelle di **Murano** Puro argento sandwich gloss white with tiles of **Murano** Glass Real Silver Sandwich (decorazioni argento foglia-silver foil decorations)	(B) ARGENTO FOGLIA (silver foil)	(C) BIANCO LUCIDO (gloss white) (D) BIANCO (white)	**€ 12.470,70**

FRAME-214 Gold/Silver Eyes-Mirror

Specchiera a parete - Wall Mirror

cornice - frame: METALBLACK
con formelle di Murano ORO 24 kt. sandwich **€ 6.011,50**
with tiles of Murano glass GOLD 24 kt. sandwich

con formelle di Murano Puro ARGENTO sandwic **€ 5.705,70**
with tiles of Murano glass real SILVER sandwich

cornice - frame: **€ 6.221,60**
Bianco/Nero Lucido-Gloss White/Black
con formelle di Murano Puro ARGENTO sandwic
with tiles of Murano glass real SILVER sandwich

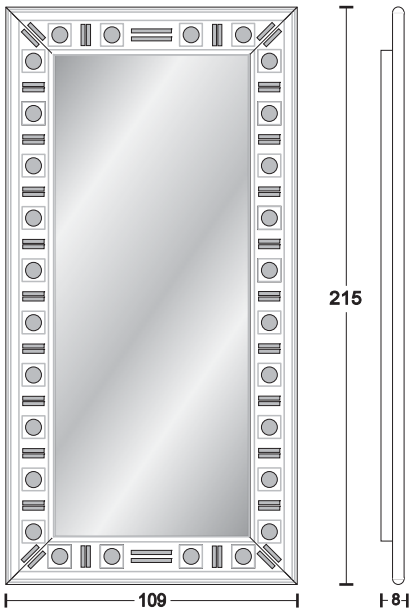

FRAME-214 Gold/Silver Eyes-Solo Frame

Solo cornice - Just Frame

cornice - frame: METALBLACK
con formelle di Murano ORO 24 kt. sandwich **€ 5.649,60**
with tiles of Murano glass GOLD 24 kt. sandwich

con formelle di Murano Puro ARGENTO sandwic **€ 5.355,90**
with tiles of Murano glass real SILVER sandwich

cornice - frame: **€ 5.871,80**
Bianco/Nero Lucido-Gloss White/Black
con formelle di Murano Puro ARGENTO sandwic
with tiles of Murano glass real SILVER sandwich

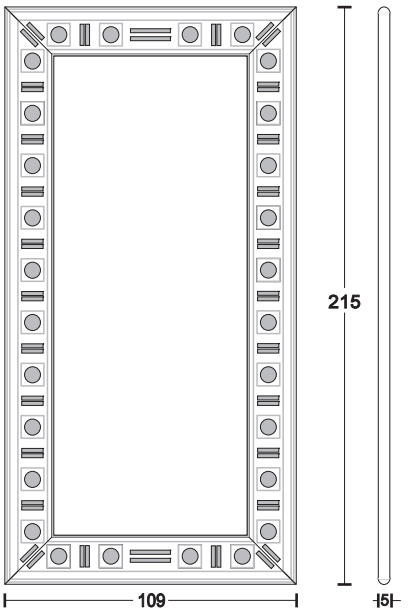

BODY ROUND LIGHT-Gold/Silver Eyes

Corpo illuminante a parete - Wall Body light

cornice - frame: METALBLACK **€ 5.222,80**
con formelle di **Murano** ORO 24 kt. sandwich
with tiles of **Murano** glass GOLD 24 kt. sandwich

con formelle di **Murano** ARGENTO sandwic **€ 5.020,40**
with tiles of **Murano** glass real SILVER sandwich

cornice - frame: **€ 5.243,70**
Bianco/Nero Lucido-Gloss White/Black
con formelle di Murano Puro ARGENTO sandwic
with tiles of Murano glass real SILVER sandwich
-decorazioni argento foglia-silver foil decorations

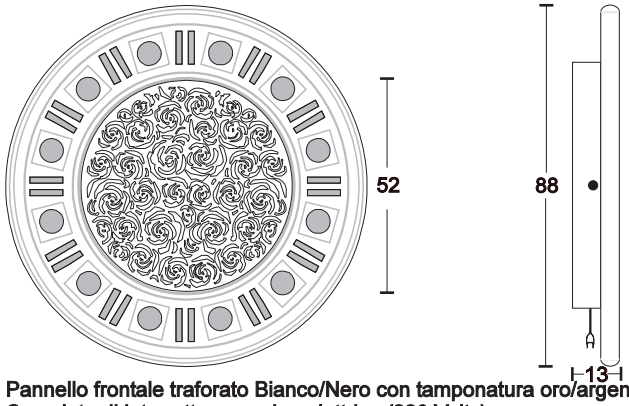

Pannello frontale traforato Bianco/Nero con tamponatura oro/argento foglia.
Completo di interruttore e spina elettrica (220 Volts)
Frontal board White/black colour with gold or silver foil shadings
provided with switch and plug (220 volts)

BODY ROUND MIRROR-Gold/Silver Eyes

Specchiera a parete-Wall Mirror

cornice - frame: METALBLACK
con formelle di **Murano** ORO 24 kt. sandwich **€ 4.051,30**
with tiles of **Murano** glass GOLD 24 kt. sandwich

con formelle di **Murano** ARGENTO sandwic **€ 3.847,80**
with tiles of **Murano** glass real SILVER sandwich

cornice - frame: **€ 4.072,20**
Bianco/Nero Lucido-Gloss White/Black
con formelle di Murano Puro ARGENTO sandwic
with tiles of Murano glass real SILVER sandwich
-decorazioni argento foglia-silver foil decorations

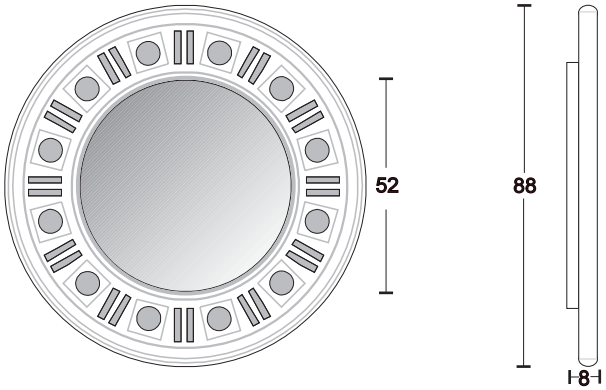

FRAME - 120 GOLD EYES - SILVER EYES

Elemento porta CD-DVD a parete
Wall CD-DVD rack

cornice - frame:METALBLACK
con formelle di **Murano** ORO 24 kt. sandwich
with tiles of **Murano** glass GOLD 24 kt. sandwich
decorazioni oro foglia-gold foil decorations
(interno-inside:METALBLACK)

€ 4.672,80

cornice - frame:METALBLACK
con formelle di **Murano** ARGENTO sandwic
with tiles of **Murano** glass real SILVER sandwich
decorazioni argento foglia-silver foil decorations
(interno-inside:METALBLACK)

€ 4.450,60

cornice - frame:
Bianco/Nero Lucido-Gloss White/Black
con formelle di **Murano** ARGENTO sandwic
with tiles of **Murano** glass real SILVER sandwich
decorazioni argento foglia-silver foil decorations
(interno-inside:Nero/Bianco-Black/White)

€ 4.660,70

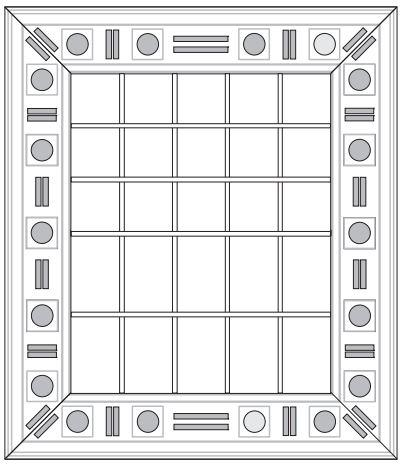

art.: F12-3C3V
234 CD + 90 DVD

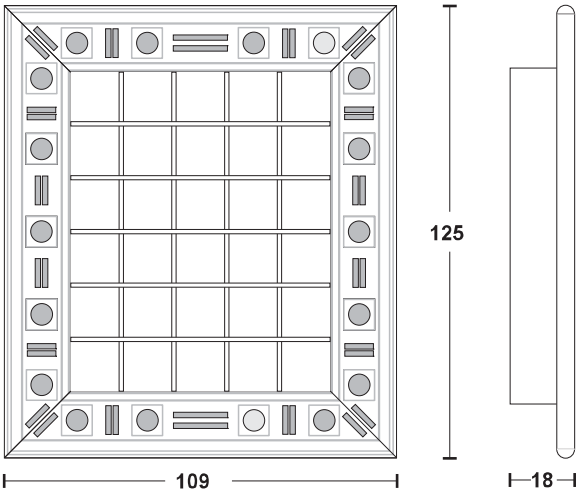

art.: F12-6C
390 CD

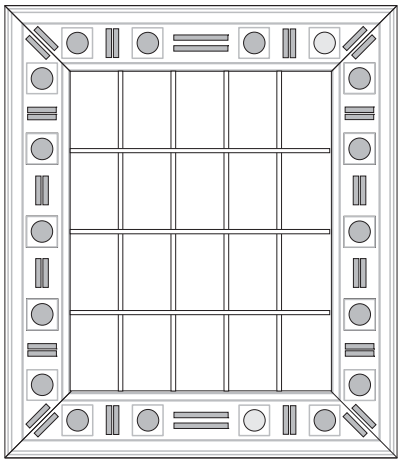

art.:.F12-4V
180 DVD

FRAME 120 Gold/Silver Eyes - MIRROR

Specchiera a parete - Wall Mirror

cornice - frame: METALBLACK
con formelle di **Murano** ORO 24 ct. sandwich
with tiles of **Murano** glass GOLD 24 ct. sandwich **€ 4.268,00**

con formelle di **Murano** ARGENTO sandwic
with tiles of **Murano** glass real SILVER sandwich **€ 4.059,00**

cornice - frame:
Bianco/Nero Lucido-Gloss White/Black
con formelle di **Murano** ARGENTO sandwic
with tiles of **Murano** glass real SILVER sandwich
-decorazioni argento/oro foglia-silver foil decorations **€ 4.252,60**

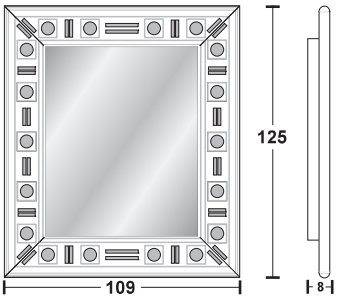

FRAME 120 Gold/Silver Eyes-Solo Frame

Solo cornice - Just Frame

cornice - frame: METALBLACK
con formelle di **Murano** ORO 24 ct. sandwich
with tiles of **Murano** glass GOLD 24 ct. sandwich **€ 3.946,80**

con formelle di **Murano** ARGENTO sandwic
with tiles of **Murano** glass real SILVER sandwich **€ 3.752,10**

cornice - frame:
Bianco/Nero Lucido-Gloss White/Black
con formelle di **Murano** ARGENTO sandwic
with tiles of **Murano** glass real SILVER sandwich
-decorazioni argento/oro foglia-silver foil decorations **€ 3.962,20**

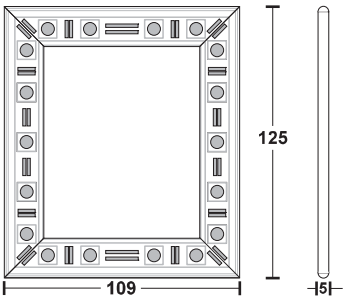

FRAME - 214 GOLD EYES - SILVER EYES

Elemento porta CD-DVD a parete
Wall CD-DVD rack

cornice - frame:
METALBLACK
con formelle di **Murano** ORO 24 kt. sandwich
with tiles of **Murano** glass GOLD 24 kt. sandwich
(decorazioni oro foglia-golde foil decorations)
(interno-inside:METALBLACK)

€ 6.780,40

cornice - frame:
METALBLACK
con formelle di **Murano** Puro ARGENTO sandwic
with tiles of **Murano** glass real SILVER sandwich
(decorazioni argento foglia-silver foil decorations)
(interno-inside:METALBLACK)

€ 6.444,90

cornice - frame:
Bianco/Nero lucido-Gloss White/Black
con formelle di **Murano** Puro ARGENTO sandwic
with tiles of **Murano** glass real SILVER sandwich
(decorazioni argento foglia-silver foil decorations)
(interno-inside:Bianco/Nero-White/Black)

€ 6.959,70

art. F214-12C
780 CD

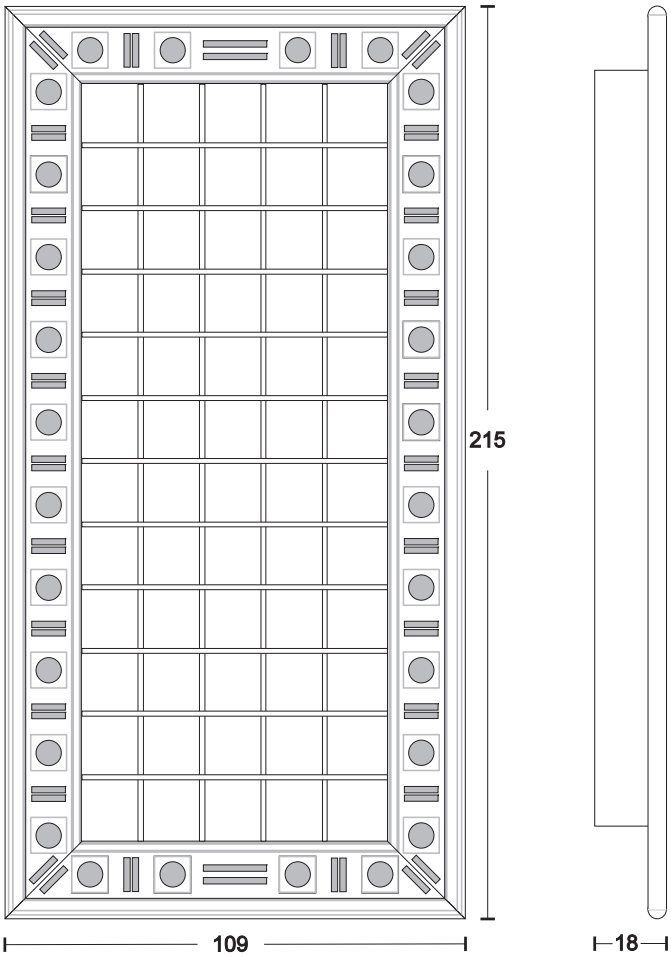

art. F214-9C2V
585 CD+90 DVD

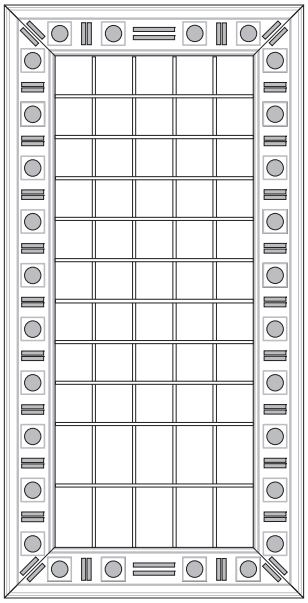

art. F214-6C4V
390 CD+180 DVD

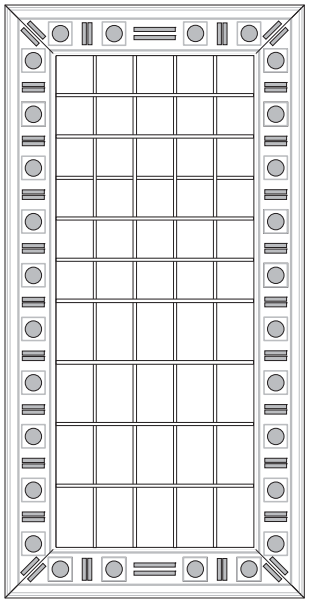

art. F214-3C6V
234 CD+270 DVD

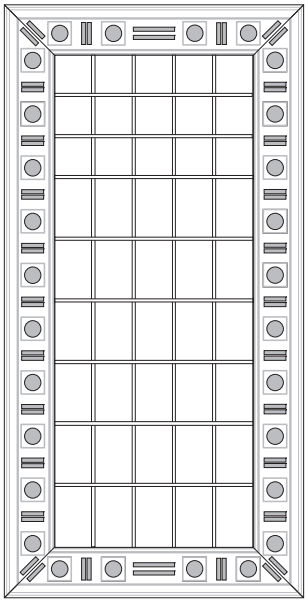

art. F214-8V
360 DVD

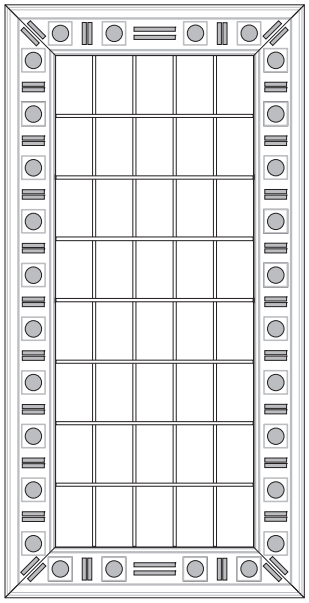

BODY LIGHT - GOLD EYES - SILVER EYES

Corpo illuminante a parete
Wall Body-light

Completo di interruttore e spina elettrica (220 Volts)
Provided with switch and plug (220 volts)

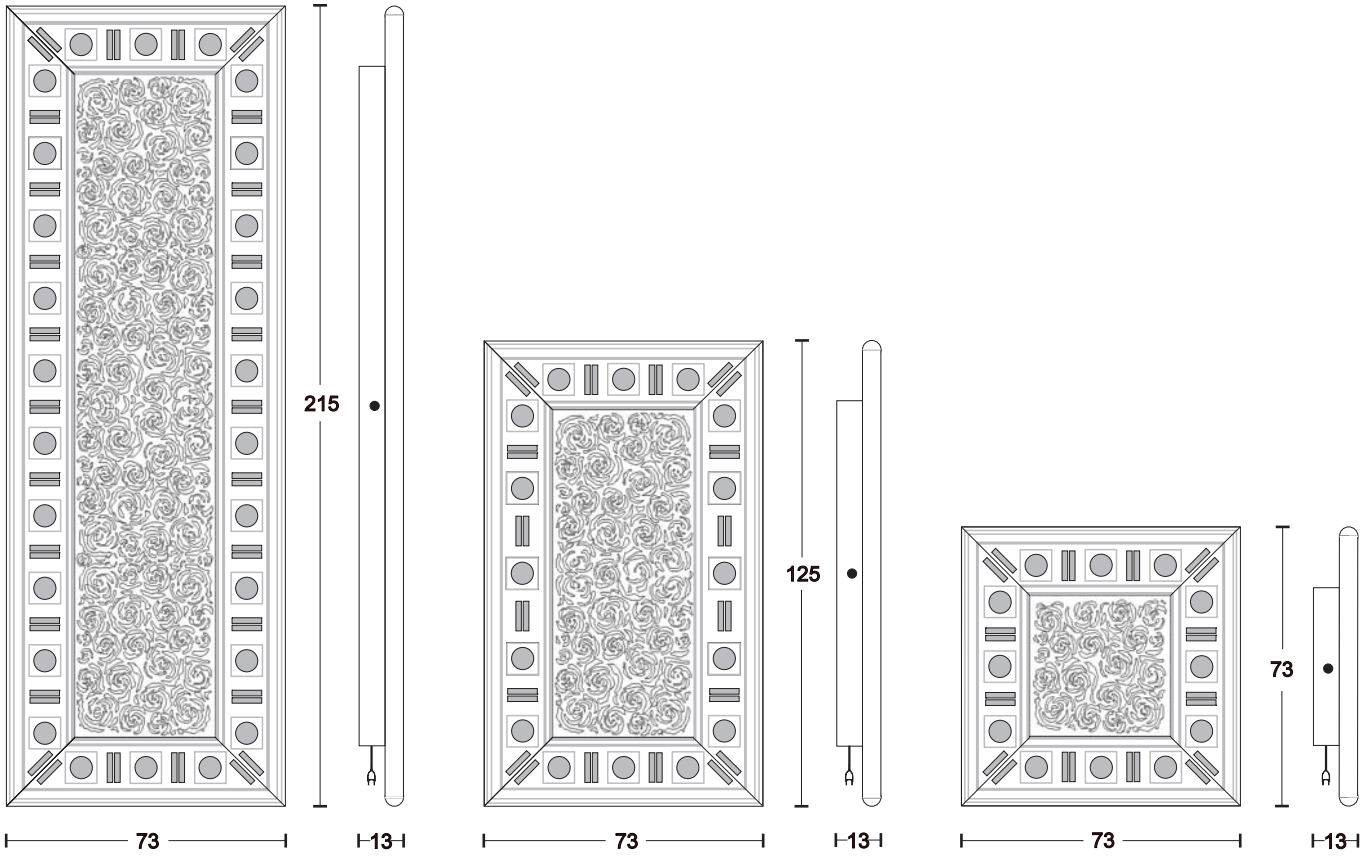

BODY LIGHT 214-G./S. EYES	BODY LIGHT 120-G./S. EYES	BODY LIGHT 80-G./S. EYES
cornice - frame: **€ 7.453,60** METALBLACK con formelle di **Murano** ORO 24 kt. sandwich with tiles of **Murano** glass GOLD 24 kt. sandwich -decorazioni oro foglia-gold foil decorations	cornice - frame: **€ 5.282,20** METALBLACK con formelle di **Murano** ORO 24 kt. sandwich with tiles of **Murano** glass GOLD 24 kt. sandwich -decorazioni oro foglia-gold foil decorations	cornice - frame: **€ 3.375,90** METALBLACK con formelle di **Murano** ORO 24 kt. sandwich with tiles of **Murano** glass GOLD 24 kt. sandwich -decorazioni oro foglia-gold foil decorations
cornice - frame: **€ 7.093,90** METALBLACK con formelle di **Murano** Puro ARGENTO sandwic with tiles of **Murano** glass real SILVER sandwich -decorazioni argento foglia- silver foil decorations	cornice - frame: **€ 4.964,30** METALBLACK con formelle di **Murano** Puro ARGENTO sandwic with tiles of **Murano** glass real SILVER sandwich -decorazioni argento foglia- silver foil decorations	cornice - frame: **€ 3.214,20** METALBLACK con formelle di **Murano** Puro ARGENTO sandwic with tiles of **Murano** glass real SILVER sandwich -decorazioni argento foglia- silver foil decorations
cornice - frame: **€ 7.440,40** Bianco/Nero Lucido-Gloss White/Black con formelle di **Murano** Puro ARGENTO sandwic with tiles of **Murano** glass real SILVER sandwich -decorazioni argento foglia-silver foil decorations	cornice - frame: **€ 5.229,40** Bianco/Nero Lucido-Gloss White/Black con formelle di **Murano** Puro ARGENTO sandwic with tiles of **Murano** glass real SILVER sandwich -decorazioni argento foglia-silver foil decorations	cornice - frame: **€ 3.333,00** Bianco/Nero Lucido-Gloss White/Black con formelle di **Murano** Puro ARGENTO sandwic with tiles of **Murano** glass real SILVER sandwich -decorazioni argento foglia-silver foil decorations
Pannello frontale traforato color Nero/Bianco con tamponatura oro o argento foglia. Frontal board in black/White colour with gold or silver foil shadings	Pannello frontale traforato color Nero/Bianco con tamponatura oro o argento foglia. Frontal board in black/White colour with gold or silver foil shadings	Pannello frontale traforato color Nero/Bianco con tamponatura oro o argento foglia. Frontal board in black/White colour with gold or silver foil shadings

BODY MIRROR - GOLD EYES - SILVER EYES

SPECCHIERA A PARETE
WALL MIRROR

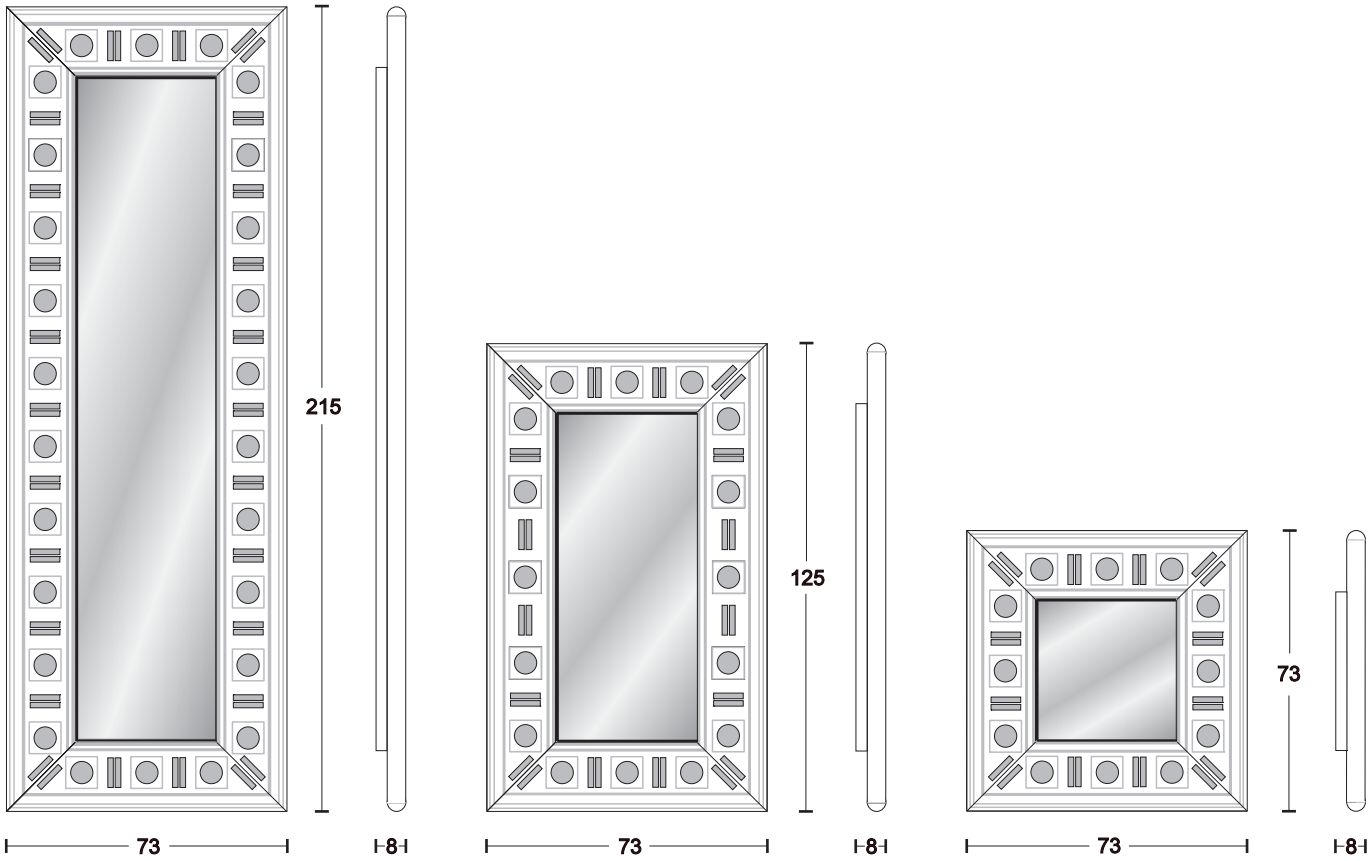

BODY MIRROR 214-G./S. EYES	BODY MIRROR 120-G./S. EYES	BODY MIRROR 80-G./S. EYES
Specchiera a parete-Wall Mirror	Specchiera a parete-Wall Mirror	Specchiera a parete-Wall Mirror
cornice - frame: **€ 5.701,30** METALBLACK con formelle di **Murano** ORO 24 kt. sandwich with tiles of **Murano** glass GOLD 24 kt. sandwich -decorazioni oro foglia-gold foil decorations	cornice - frame: **€ 3.996,30** METALBLACK con formelle di **Murano** ORO 24 kt. sandwich with tiles of **Murano** glass GOLD 24 kt. sandwich -decorazioni oro foglia-gold foil decorations	cornice - frame: **€ 2.833,60** METALBLACK con formelle di **Murano** ORO 24 kt. sandwich with tiles of **Murano** glass GOLD 24 kt. sandwich -decorazioni oro foglia-gold foil decorations
cornice - frame: **€ 4.038,10** METALBLACK con formelle di **Murano** Puro ARGENTO sandwic with tiles of **Murano** glass real SILVER sandwich -decorazioni argento foglia-silver foil decorations	cornice - frame: **€ 3.759,80** METALBLACK con formelle di **Murano** Puro ARGENTO sandwic with tiles of **Murano** glass real SILVER sandwich -decorazioni argento foglia-silver foil decorations	cornice - frame: **€ 2.670,80** METALBLACK con formelle di **Murano** Puro ARGENTO sandwic with tiles of **Murano** glass real SILVER sandwich -decorazioni argento foglia-silver foil decorations
cornice - frame: **€ 5.703,50** Bianco/Nero Lucido-Gloss White/Black con formelle di **Murano** Puro ARGENTO sandwic with tiles of **Murano** glass real SILVER sandwich -decorazioni argento foglia-silver foil decorations	cornice - frame: **€ 4.002,90** Bianco/Nero Lucido-Gloss White/Black con formelle di **Murano** Puro ARGENTO sandwic with tiles of **Murano** glass real SILVER sandwich -decorazioni argento foglia-silver foil decorations	cornice - frame: **€ 2.846,80** Bianco/Nero Lucido-Gloss White/Black con formelle di **Murano** Puro ARGENTO sandwic with tiles of **Murano** glass real SILVER sandwich -decorazioni argento foglia-silver foil decorations

SHINING SUN - GOLD/SILVER EYES

Corpo illuminante a parete - Wall Body light

cornice - frame: METALBLACK
con formelle di **Murano** ORO 24 kt. sandwich **€ 6.723,20**
with tiles of **Murano** glass GOLD 24 kt. sandwich

con formelle di **Murano Puro** ARGENTO sandwic
with tiles of **Murano** glass real SILVER sandwich **€ 6.400,90**

cornice - frame:
Bianco/Nero Lucido-Gloss White/Black
con formelle di **Murano Puro** ARGENTO sandwic **€ 6.680,30**
with tiles of **Murano** glass real SILVER sandwich

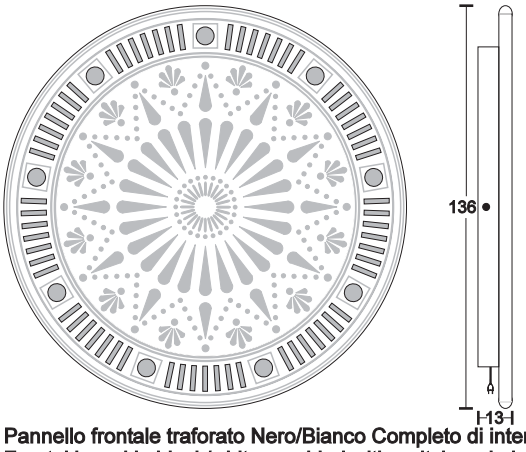

SHINING SUN-GOLD/SILVER EYES-mirror

Specchiera a parete - Wall Mirror

cornice - frame: METALBLACK
con formelle di **Murano** ORO 24 kt. sandwich **€ 5.090,80**
with tiles of **Murano** glass GOLD 24 kt. sandwich

con formelle di **Murano Puro** ARGENTO sandwic
with tiles of **Murano** glass real SILVER sandwich **€ 4.771,80**

cornice - frame:
Bianco/Nero Lucido-Gloss White/Black
con formelle di **Murano Puro** ARGENTO sandwic **€ 5.050,10**
with tiles of **Murano** glass real SILVER sandwich

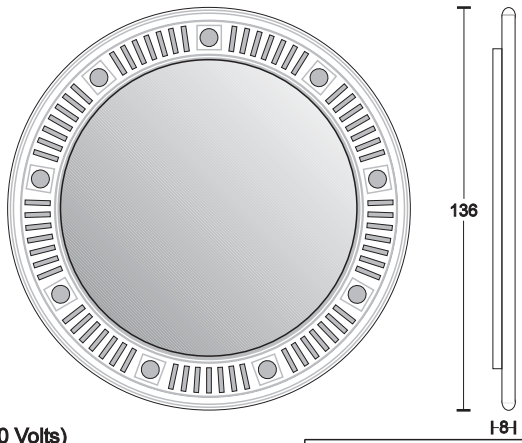

Pannello frontale traforato Nero/Bianco Completo di interruttore e spina (220 Volts)
Frontal board in black/white provided with switch and plug (220 volts)

SITTING CASE - GOLD/SILVER EYES

Cassapanca - Sitting case
Struttura METALBLACK. Pannelli frontali traforati colore nero con bassofondo Oro/Argento foglia.
Piano chiusura METALBLACK con bassorilievo Oro/argento foglia, completo di ammortizzatori.
Structure METALBLACK. black frontal panel with GOLD/SILVER foil background.
Opening top METALBLACK with GOLD/SILVER foil bas-relief, with Shock absorber

con formelle di **Murano** ORO 24 kt. sandwich
with tiles of **Murano** glass GOLD 24 kt. sandwich **€ 7.729,70**

con formelle di **Murano** Puro ARGENTO sandwic
with tiles of **Murano** glass real SILVER sandwich **€ 7.364,50**

Struttura Bianco/Nero Lucido. Pannelli frontali traforati colore bianco/nero con bassofondo Argento foglia.
Piano chiusura Bianco/Nero opaco con bassorilievo argento foglia, completo di ammortizzatori.
Structure Gloss White/Black. Opaque White/Black frontal panel with Silver foil background.
Opening top Opaque White/Black with Silver foil bas-relief, with Shock absorber
con formelle di **Murano** Puro ARGENTO sandwic
with tiles of **Murano** glass real SILVER sandwich **€ 7.642,80**

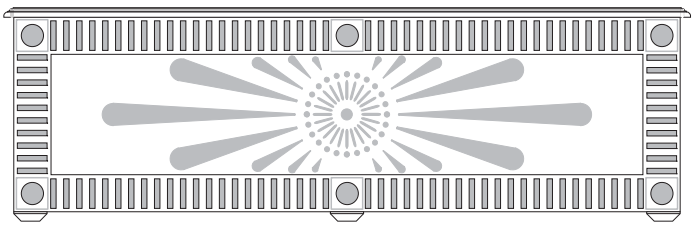

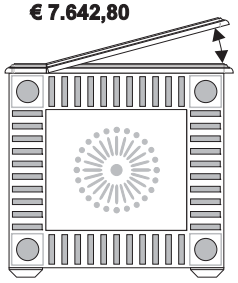

TRAYS

OPTIONAL:
Coppia vassoi scorrevoli - METALTITANIO

€ 663,30

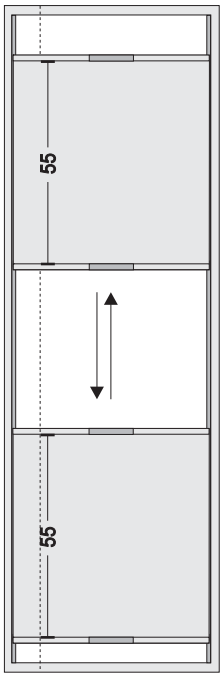

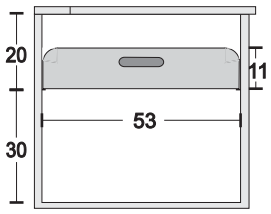

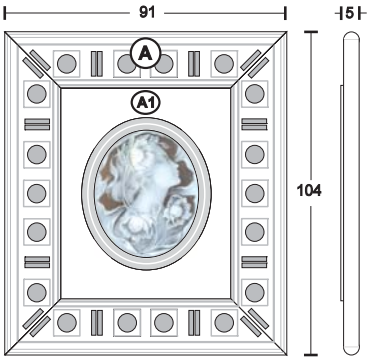

CAMMEO

Ovale con Cammeo (Sinistro o destro)
Oval with Cameo (Left or Right)

(A) M.black/Crema-formelle Murano:oro 24 kt
Metalblack/Cream-Murano Glass: Gold 24 kt

(A1) tutti i laccati opachi-all opaque laquering **€ 4.076,60**

(A) M.black/bianco-formelle Murano:puro argento
Metalblack/White-Murano Glass: pure Silver

(A1) tutti i laccati opachi-all opaque laquering **€ 3.957,80**

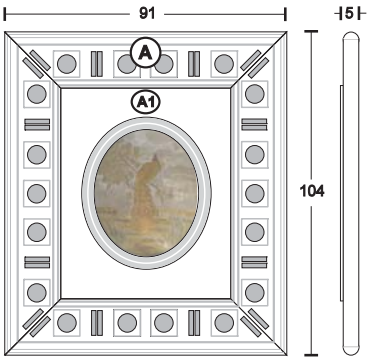

PAVONE

Ovale con Pavone Artistico oro 23/22/20/18/16/12 Carati (Sinistro o destro)
Oval with Artistic peacock Gold 23/22/20/18/16/12 carats (Left or Right)

(A) M.black/Crema-formelle Murano:oro 24 kt
Metalblack/Cream-Murano Glass: Gold 24 kt

(A1) tutti i laccati opachi-all opaque laquering **€ 5.907,00**

(A) M.black/bianco-formelle Murano:puro argento
Metalblack/White-Murano Glass: pure Silver

(A1) tutti i laccati opachi-all opaque laquering **€ 5.780,50**

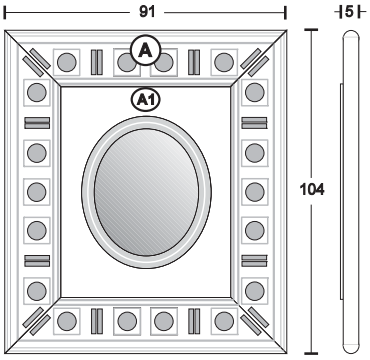

OVAL MIRROR

Ovale con specchio bisellato
Oval with bevelled mirror

(A) M.black/Crema-formelle Murano:oro 24 kt
Metalblack/Cream-Murano Glass: Gold 24 kt

(A1) tutti i laccati opachi-all opaque laquering-alle Matte Lackierungen **€ 3.864,30**

(A) M.black/bianco-formelle Murano:puro argento
Metalblack/White-Murano Glass: pure Silver

(A1) tutti i laccati opachi-all opaque laquering **€ 3.745,50**

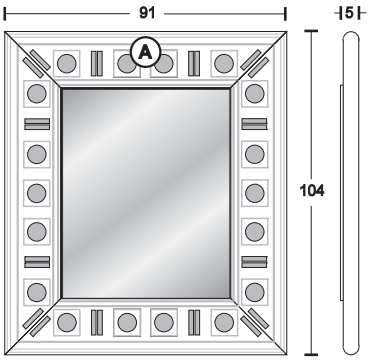

MIRROR

Specchio anticato o normale
Antique mirror or standard

(A) M.black/Crema-formelle Murano:oro 24 kt
Metalblack/Cream-Murano Glass: Gold 24 kt **€ 3.890,70**

(A) M.black/bianco-formelle Murano:puro argento
Metalblack/White-Murano Glass: pure Silver **€ 3.771,90**

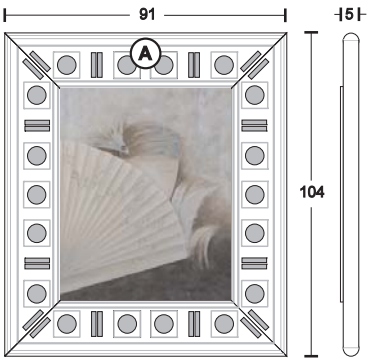

THE FAN

Dipinto materico "Donna con Ventaglio" (Sinistro o destro)
Hand-made Materic painting "Donna con Ventaglio" (Left or Right)

(A) Tutti i laccati opachi-Decorazioni Oro/Argento
all opaque laquering-decoration gold/silver foil **€ 4.184,40**

(A) Nero/Bianco Lucido-Decori Oro/ argento
Gloss Black/White-Gold/Silver Foil Decorations **€ 4.065,60**

CIAIKA -170 GOLD EYES - SILVER EYES

Tavolino porta CD/DVD per 800 Cd (e/o 378 DVD)
Coffee table CD/DVD rack for 800 CD (and or 378 DVD)

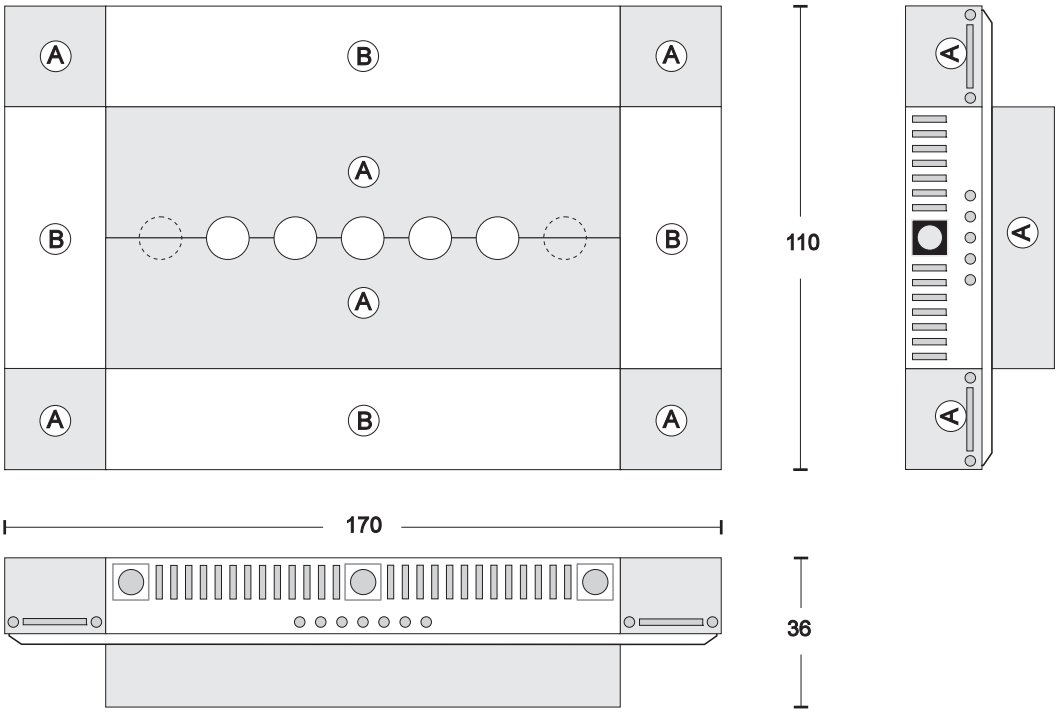

Finiture esterne standard
Outside Standard finishings

Ⓐ ORO FOGLIA
(gold foil)
con formelle di **Murano**
NERO
with tiles of **Murano**
glass BLACK

Ⓑ METALBLACK **€ 8.063,00**
con formelle di **Murano**
ORO 24 kt. sandwich
with tiles of **Murano** glass
GOLD 24 kt. sandwich

Ⓐ ARGENTO FOGLIA
(silver foil)
con formelle di **Murano**
NERO
with tiles of **Murano**
glass BLACK

Ⓑ METALBLACK **€ 7.685,70**
con formelle di **Murano**
PURO ARGENTO sandwich
with tiles of **Murano** glass
REAL SILVER sandwich

Ⓐ ARGENTO FOGLIA
(silver foil)
con formelle di **Murano**
PURO ARGENTO sandwich
with tiles of **Murano**
REAL SILVER sandwich

Ⓑ nero/bianco lucido **€ 8.242,30**
gloss white/black
con formelle di **Murano**
PURO ARGENTO sandwich
with tiles of **Murano** glass
REAL SILVER sandwich

Finitura superfici interne: METALSILVER o METALGOLD
Finishings of inside surface: METALSILVER or METALGOLD

CIAIKA -110 GOLD EYES - SILVER EYES

Tavolino porta CD/DVD per 490 Cd (e/o 218 DVD)
Coffe table CD/DVD rack for 490 CD (and or 218 DVD)

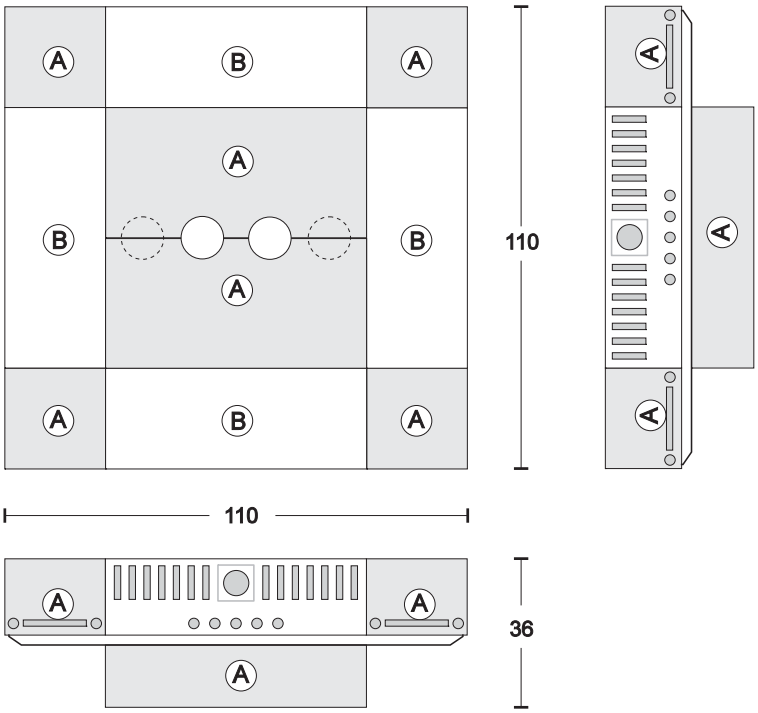

Finiture esterne standard
Outside Standard finishings

A ORO FOGLIA (gold foil) con formelle di **Murano** NERO with tiles of **Murano** glass BLACK	B METALBLACK con formelle di **Murano** ORO 24 kt. sandwich with tiles of **Murano** glass GOLD 24 kt. sandwich	**€ 6.179,80**
A ARGENTO FOGLIA (silver foil) con formelle di **Murano** NERO with tiles of **Murano** glass BLACK	B METALBLACK con formelle di **Murano** **PURO ARGENTO** sandwich with tiles of **Murano** glass **REAL SILVER** sandwich	**€ 5.951,00**
A ARGENTO FOGLIA (silver foil) con formelle di **Murano** **PURO ARGENTO** sandwich with tiles of **Murano** **REAL SILVER** sandwich	B nero/bianco lucido gloss white/black con formelle di **Murano** **PURO ARGENTO** sandwich with tiles of **Murano** glass **REAL SILVER** sandwich	**€ 6.614,30**

Finitura superfici interne-Finishings of inside surface: METALSILVER o METALGOLD

CIAIKA - 110 SLIM - GOLD EYES - SILVER EYES

Tavolino porta CD/DVD per 180 Cd (e/o 92 DVD)
Coffe table CD/DVD rack for 180 CD (and or 92 DVD)

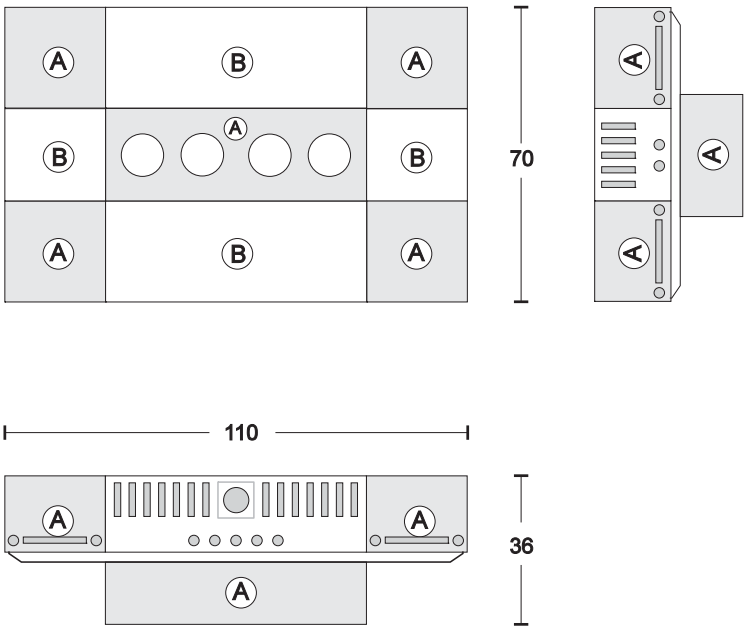

Finiture esterne standard
Outside Standard finishings

A ORO FOGLIA (gold foil) con formelle di **Murano** NERO with tiles of **Murano** glass BLACK	B METALBLACK con formelle di **Murano** ORO 24 kt. sandwich with tiles of **Murano** glass GOLD 24 kt. sandwich	**€ 5.648,50**
A ARGENTO FOGLIA (silver foil) con formelle di **Murano** NERO with tiles of **Murano** glass BLACK	B METALBLACK con formelle di **Murano** **PURO ARGENTO** sandwich with tiles of **Murano** glass **REAL SILVER** sandwich	**€ 5.419,70**
A ARGENTO FOGLIA (silver foil) con formelle di **Murano** **PURO ARGENTO** sandwich with tiles of **Murano** **REAL SILVER** sandwich	B nero/bianco lucido gloss white/black con formelle di **Murano** **PURO ARGENTO** sandwich with tiles of **Murano** glass **REAL SILVER** sandwich	**€ 5.951,00**

Finitura superfici interne-Finishings of inside surface: METALSILVER o METALGOLD

1 WINDOWS - COFFEE TABLE - GOLD-SILVER EYES

Tavolino contenitore con vassoi estraibili - Coffee table container removable tray

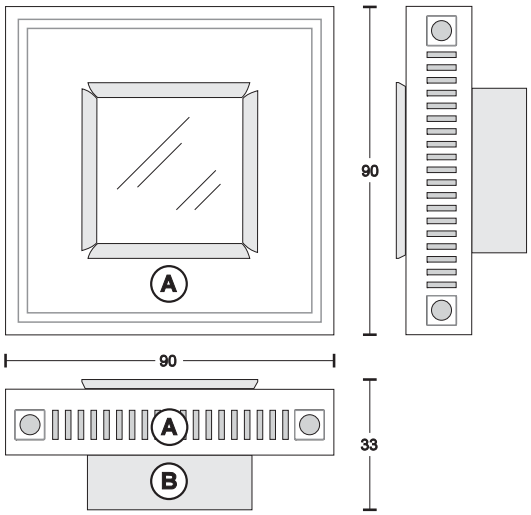

(A) Metalblack/Crema -formelle Murano: oro 24 Kt decori oro foglia - vassoi in vetro temperato maniglie oro foglia
Metalblack/Cream - Murano glass: Gold 24 Kt decoration Gold foil - Ardened Glass Trays, handles Gold foil **€ 3.465,00**

(B) Metalblack/Crema-Metalblack/Cream

(A) Metalblack/Bianco -formelle Murano: puro argento decori argento foglia - vassoi in vetro temperato maniglie argento foglia
Metalblack/White - Murano glass: pure Silver decoration silver foil - Ardened Glass Trays handles Silverfoil **€ 3.327,50**

(B) Metalblack/Bianco-Metalblack/White

2 WINDOWS - COFFEE TABLE - GOLD-SILVER EYES

Tavolino contenitore con vassoi estraibili - Coffee table container removable tray

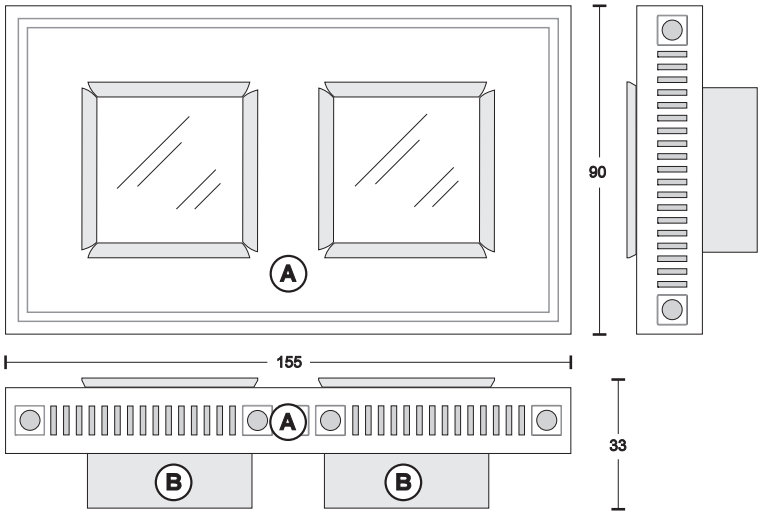

(A) Metalblack/Crema - formelle Murano: oro 24 Kt - decori oro foglia - vassoi in vetro temperato - maniglie oro foglia
Metalblack/Cream - Murano glass: Gold 24 Kt - decoration Gold foil - Ardened Glass Trays - handles Gold foil € 5.450,50

(B) Metalblack/Crema-Metalblack/Cream

(A) Metalblack/Bianco - formelle Murano: puro argento - decori argento foglia - vassoi in vetro temperato - maniglie argento foglia
Metalblack/White - Murano glass: pure Silver - decoration silver foil - Ardened Glass Trays - handles Silverfoil € 4.939,00

(D) Metalblack/Bianco-Metalblack/White

4 WINDOWS - COFFEE TABLE - GOLD-SILVER EYES

Tavolino contenitore con vassoi estraibili - Coffee table container removable tray

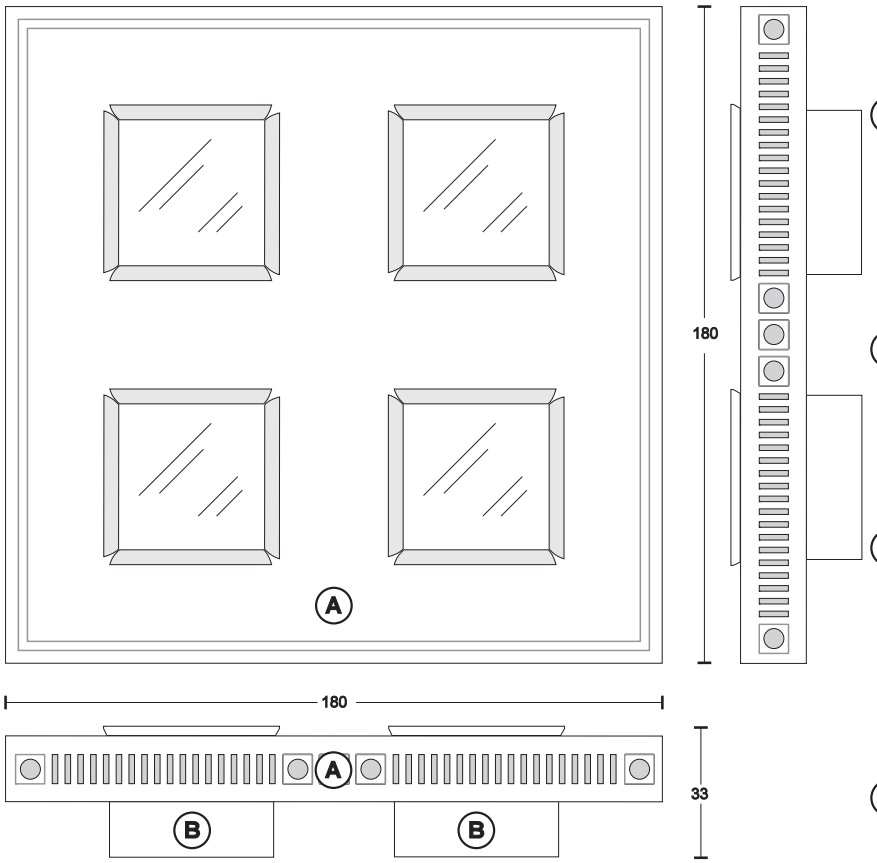

(A) Metalblack/Crema -formelle Murano: oro 24 Kt decori oro foglia - vassoi in vetro temperato maniglie oro foglia
Metalblack/Cream - Murano glass: Gold 24 Kt decoration Gold foil - Ardened Glass Trays, handles Gold foil

(B) Metalblack/Crema-Metalblack/Cream

€ 9.641,50

(A) Metalblack/Bianco -formelle Murano: puro argento decori argento foglia - vassoi in vetro temperato maniglie argento foglia
Metalblack/White - Murano glass: pure Silver decoration silver foil - Ardened Glass Trays handles Silverfoil

(B) Metalblack/Bianco-Metalblack/White

€ 9.146,50

3 WINDOWS - COFFEE TABLE - GOLD - SILVER EYES

Tavolino contenitore con vassoi estraibili - Coffee table container removable tray

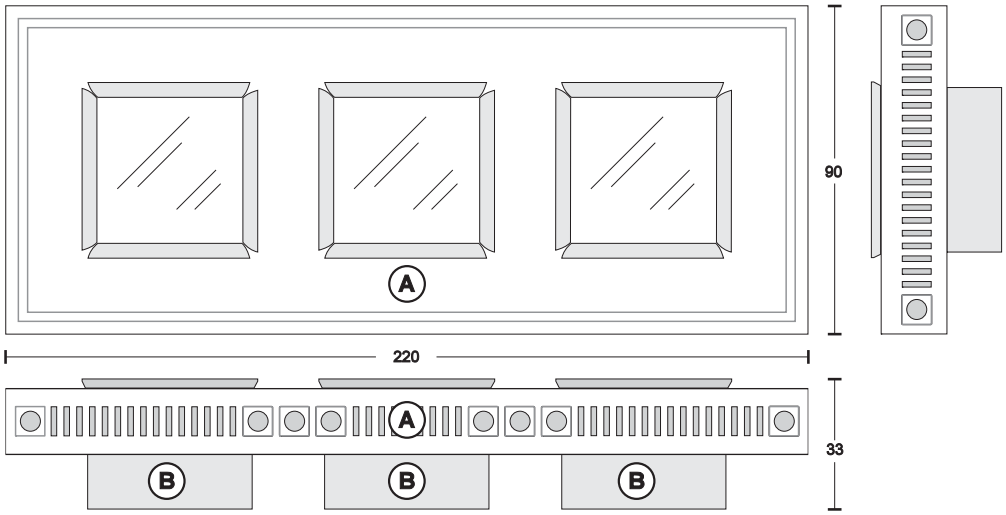

(A) Metalblack/Crema - formelle Murano: oro 24 Kt - decori oro foglia - vassoi in vetro temperato - maniglie oro foglia
Metalblack/Cream - Murano glass: Gold 24 Kt - decoration Gold foil - Ardened Glass Trays - handles Gold foil — € 7.744,00

(B) Metalblack/Crema-Metalblack/Cream

(A) Metalblack/Bianco - formelle Murano: puro argento - decori argento foglia - vassoi in vetro temperato - maniglie argento foglia
Metalblack/White - Murano glass: pure Silver - decoration silver foil - Ardened Glass Trays - handles Silverfoil — € 7.375,50

(D) Metalblack/Bianco-Metalblack/White

FLOWER 60 - GOLD/SILVER EYES

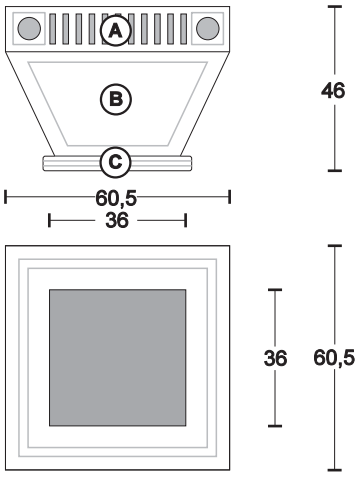

Finiture - finishings

A+B+C	Metalblack con formelle di **Murano** Oro 24 kt. Sandwich Metalblack with tiles of **Murano** Glass Gold 24 kt. Sandwich decorazioni-decorations:oro foglia-gold foil	€ 2.497,00
A+B+C	Metalblack con formelle di **Murano** Puro Argento Sandwich Metalblack with tiles of **Murano** Glass Real Silver Sandwich decorazioni-decorations:argento foglia-silver foil	€ 2.414,50
A+C	Bianco/Nero Lucido-Gloss White/Black con formelle di **Murano** Puro Argento Sandwich with tiles of **Murano** Glass Real Silver Sandwich decorazioni-decorations:argento foglia-silver foil	€ 2.511,30
B	Bianco/Nero opaco-Opaque White/Black decorazioni-decorations:argento foglia-silver foil	

Completo di vasca metallica zincata-including galvanized metal tank

VASE 90 - GOLD/SILVER EYES

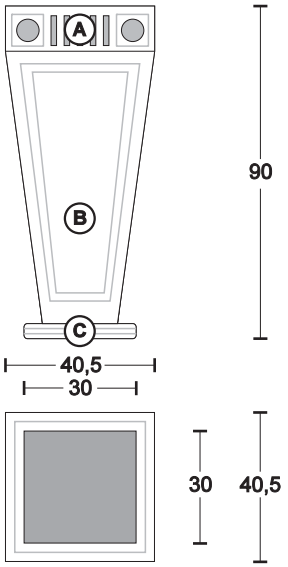

Finiture - finishings

A+B+C	Metalblack con formelle di **Murano** Oro 24 kt. Sandwich Metalblack with tiles of **Murano** Glass Gold 24 kt. Sandwich decorazioni-decorations:oro foglia-gold foil	€ 2.329,80
A+B+C	Metalblack con formelle di **Murano** Puro Argento Sandwich Metalblack with tiles of **Murano** Glass Real Silver Sandwich decorazioni-decorations:argento foglia-silver foil	€ 2.273,70
A+C	Bianco/Nero Lucido-Gloss White/Black con formelle di **Murano** Puro Argento Sandwich with tiles of **Murano** Glass Real Silver Sandwich decorazioni-decorations:argento foglia-silver foil	€ 2.372,70
B	Bianco/Nero opaco-Opaque White/Black decorazioni-decorations:argento foglia-silver foil	

Completo di vasca metallica zincata-including galvanized metal tank

VASE 125 - GOLD/SILVER EYES

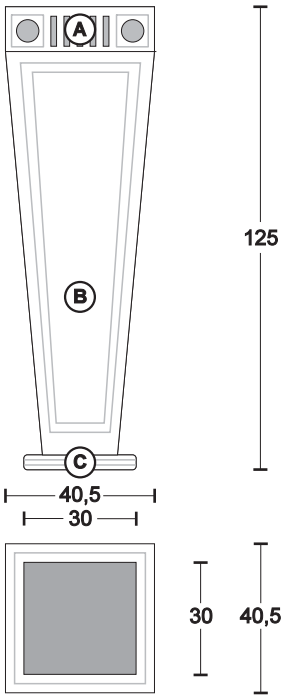

Finiture - finishings

A+B+C	Metalblack con formelle di **Murano** Oro 24 kt. Sandwich Metalblack with tiles of **Murano** Glass Gold 24 kt. Sandwich decorazioni-decorations:oro foglia-gold foil	€ 2.596,00
A+B+C	Metalblack con formelle di **Murano** Puro Argento Sandwich Metalblack with tiles of **Murano** Glass Real Silver Sandwich decorazioni-decorations:argento foglia-silver foil	€ 2.539,90
A+C	Bianco/Nero Lucido-Gloss White/Black con formelle di **Murano** Puro Argento Sandwich with tiles of **Murano** Glass Real Silver Sandwich decorazioni-decorations:argento foglia-silver foil	€ 2.679,60
B	Bianco/Nero opaco-Opaque White/Black decorazioni-decorations:argento foglia-silver foil	

Completo di vasca metallica zincata-including galvanized metal tank

FLOWER 60 - BRAZIER - GOLD/SILVER EYES

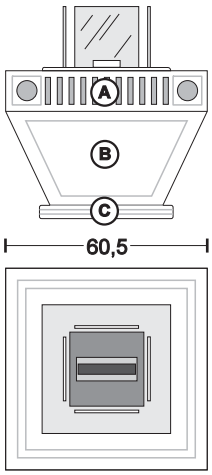

Finiture - finishings

A+B+C	Metalblack con formelle di **Murano** Oro 24 kt. Sandwich Metalblack with tiles of **Murano** Glass Gold 24 kt. Sandwich decorazioni-decorations:oro foglia-gold foil	€ 4.022,70
A+B+C	Metalblack con formelle di **Murano** Puro Argento Sandwich Metalblack with tiles of **Murano** Glass Real Silver Sandwich decorazioni-decorations:argento foglia-silver foil	€ 3.944,60
A+C	Bianco/Nero Lucido-Gloss White/Black con formelle di **Murano** Puro Argento Sandwich with tiles of **Murano** Glass Real Silver Sandwich decorazioni-decorations:argento foglia-silver foil	€ 4.034,80
B	Bianco/Nero opaco-Opaque White/Black decorazioni-decorations:argento foglia-silver foil	

Con braciere a bio-alcol removibile-completo di vetri temperati
Complete of bio-alcohol removable brazier-complete of tempered glass

VASE 90 - BRAZIER - GOLD/SILVER EYES

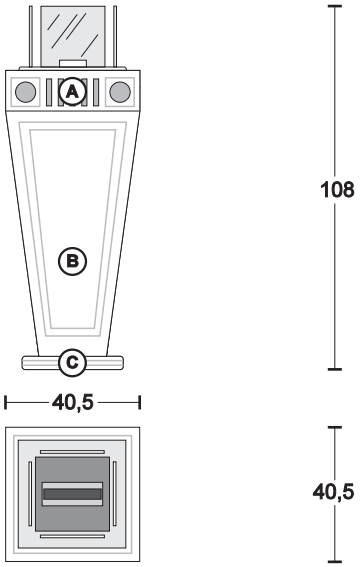

Finiture - finishings

A+B+C	Metalblack con formelle di **Murano** Oro 24 kt. Sandwich Metalblack with tiles of **Murano** Glass Gold 24 kt. Sandwich decorazioni-decorations:oro foglia-gold foil	€ 3.863,20
A+B+C	Metalblack con formelle di **Murano** Puro Argento Sandwich Metalblack with tiles of **Murano** Glass Real Silver Sandwich decorazioni-decorations:argento foglia-silver foil	€ 3.810,40
A+C	Bianco/Nero Lucido-Gloss White/Black con formelle di **Murano** Puro Argento Sandwich with tiles of **Murano** Glass Real Silver Sandwich decorazioni-decorations:argento foglia-silver foil	€ 3.903,90
B	Bianco/Nero opaco-Opaque White/Black decorazioni-decorations:argento foglia-silver foil	

Con braciere a bio-alcol removibile-completo di vetri temperati
Complete of bio-alcohol removable brazier-complete of tempered glass

VASE 125 - BRAZIER - GOLD/SILVER EYES

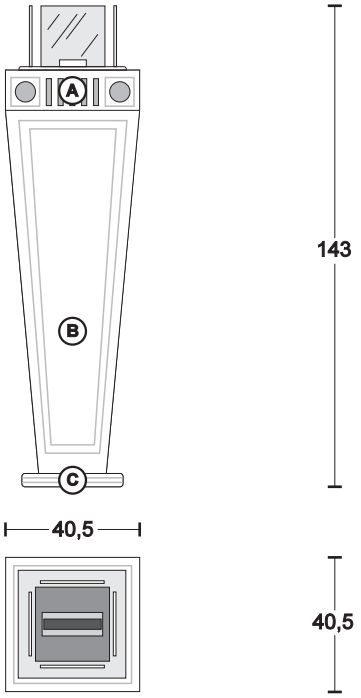

Finiture - finishings

A+B+C	Metalblack con formelle di **Murano** Oro 24 kt. Sandwich Metalblack with tiles of **Murano** Glass Gold 24 kt. Sandwich decorazioni-decorations:oro foglia-gold foil	€ 4.116,20
A+B+C	Metalblack con formelle di **Murano** Puro Argento Sandwich Metalblack with tiles of **Murano** Glass Real Silver Sandwich decorazioni-decorations:argento foglia-silver foil	€ 4.063,40
A+C	Bianco/Nero Lucido-Gloss White/Black con formelle di **Murano** Puro Argento Sandwich with tiles of **Murano** Glass Real Silver Sandwich decorazioni-decorations:argento foglia-silver foil	€ 4.194,30
B	Bianco/Nero opaco-Opaque White/Black decorazioni-decorations:argento foglia-silver foil	

Con braciere a bio-alcol removibile-completo di vetri temperati
Complete of bio-alcohol removable brazier-complete of tempered glass

CHEST-NOUVEAU-282 GOLD-SILVER EYES DIVANO - SOFA

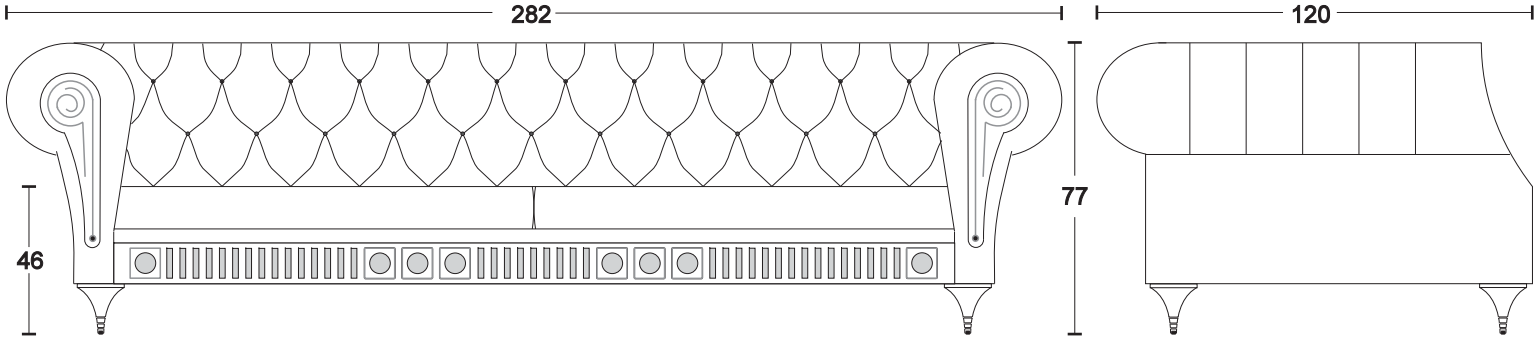

Pelle-Leather cat."SOFT"	Pelle-Leather cat."EXTRA"	Pelle-Leather cat."GLAM"
GOLD EYES € 14.575,00	GOLD EYES € 15.785,00	GOLD EYES € 17.358,00
SILVER EYES € 14.382,50	SILVER EYES € 15.598,00	SILVER EYES € 17.105,00
Eco Nabuk Eco Nubuk	Velluto Velvet	
GOLD EYES € 12.536,70	GOLD EYES € 13.972,20	
SILVER EYES € 12.346,40	SILVER EYES € 13.783,00	

CHEST-NOUVEAU-209 GOLD-SILVER EYES DIVANO - SOFA

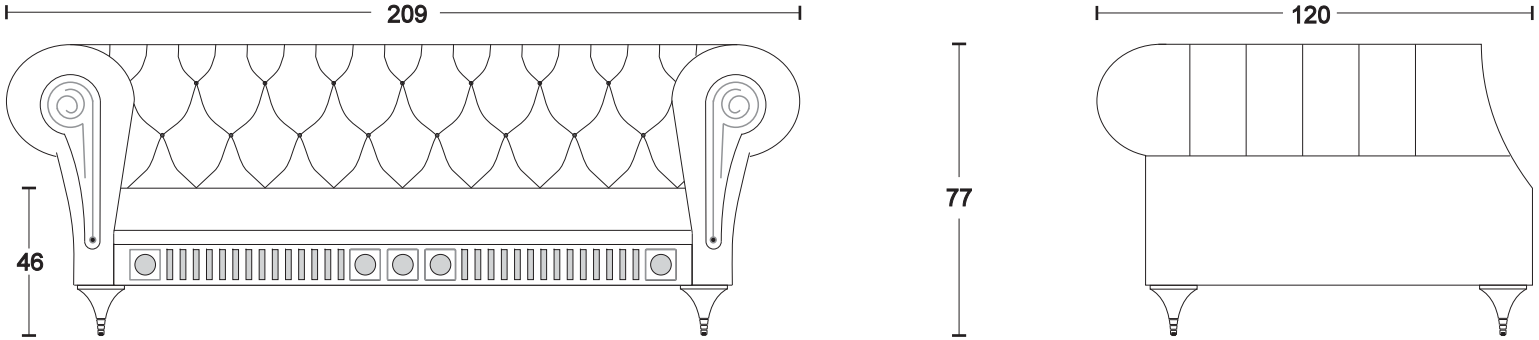

Pelle-Leather cat."SOFT"	Pelle-Leather cat."EXTRA"	Pelle-Leather cat."GLAM"
GOLD EYES € 11.627,00	GOLD EYES € 12.804,00	GOLD EYES € 13.838,00
SILVER EYES € 11.374,00	SILVER EYES € 12.424,50	SILVER EYES € 13.585,00
Eco Nabuk Eco Nubuk	Velluto Velvet	
GOLD EYES € 10.335,60	GOLD EYES € 11.388,30	
SILVER EYES € 9.956,10	SILVER EYES € 11.008,80	

CHEST-NOUVEAU-123 GOLD-SILVER EYES POLTRONA - ARMCHAIR

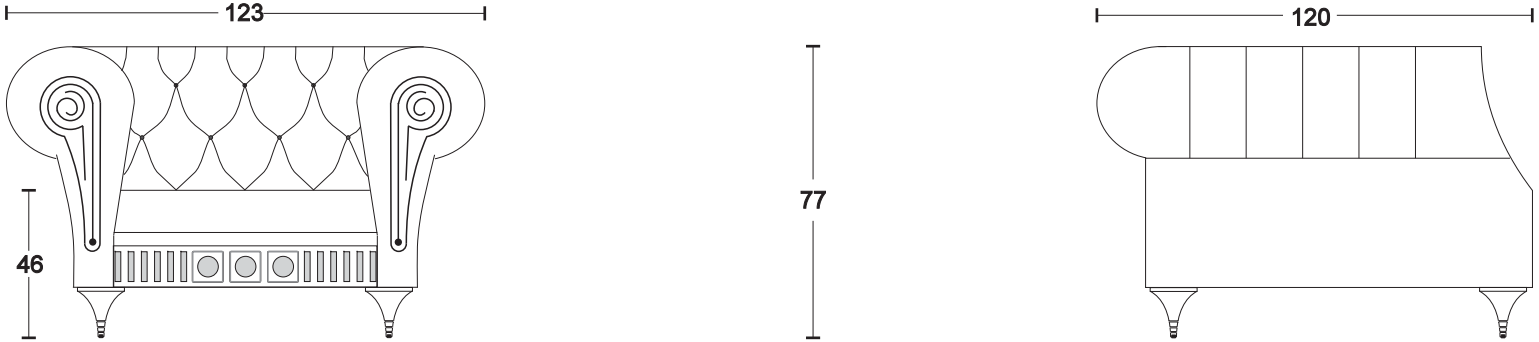

Pelle-Leather cat."SOFT"	Pelle-Leather cat."EXTRA"	Pelle-Leather cat."GLAM"
GOLD EYES € 9.691,00	GOLD EYES € 10.400,50	GOLD EYES € 11.324,50
SILVER EYES € 9.476,50	SILVER EYES € 10.296,00	SILVER EYES € 11.236,50
Eco Nabuk Eco Nubuk	Velluto Velvet	
GOLD EYES € 7.741,80	GOLD EYES € 8.659,20	
SILVER EYES € 7.640,60	SILVER EYES € 8.558,00	

CHEST NOUVEAU - GOLD/SILVER EYES

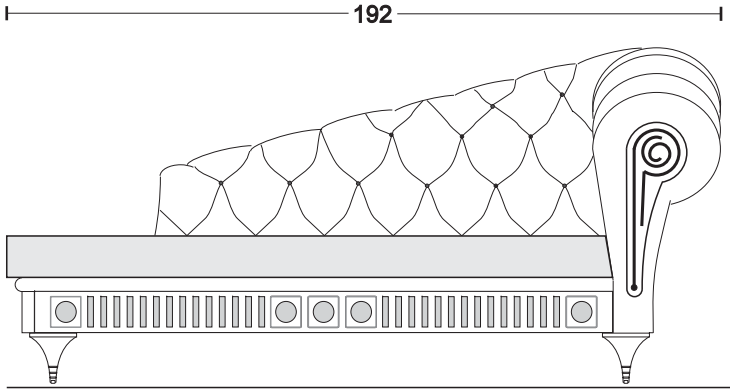

CHAISE LOUNGE - DX

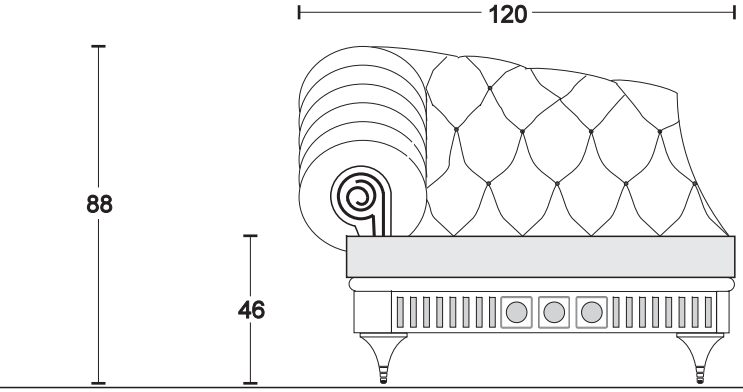

Pelle-Leather cat."SOFT"	Pelle-Leather cat."EXTRA"	Pelle-Leather cat."GLAM"
GOLD EYES € 11.605,00	GOLD EYES € 12.776,50	GOLD EYES € 13.799,50
SILVER EYES € 11.352,00	SILVER EYES € 12.397,00	SILVER EYES € 13.546,50
Eco Nabuk Eco Nubuk	Velluto Velvet	
GOLD EYES € 9.507,30	GOLD EYES € 10.608,40	
SILVER EYES € 9.127,80	SILVER EYES € 10.228,90	

CHEST NOUVEAU - GOLD/SILVER EYES

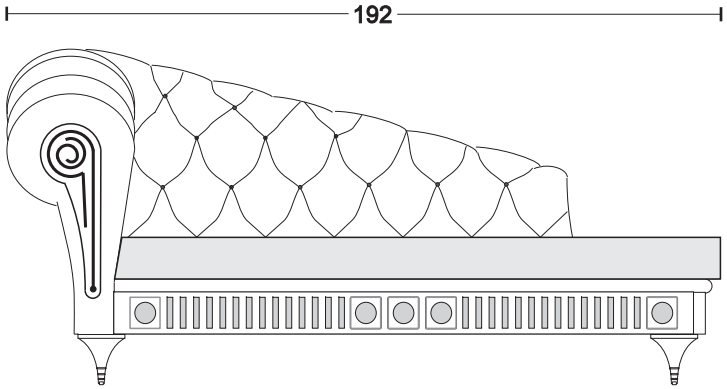

CHAISE LOUNGE - SX

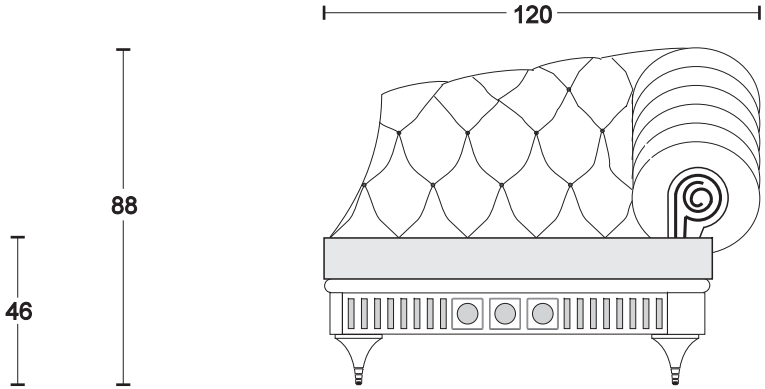

Pelle-Leather cat."SOFT"	Pelle-Leather cat."EXTRA"	Pelle-Leather cat."GLAM"
GOLD EYES € 11.605,00	GOLD EYES € 12.776,50	GOLD EYES € 13.799,50
SILVER EYES € 11.352,00	SILVER EYES € 12.397,00	SILVER EYES € 13.546,50
Eco Nabuk Eco Nubuk	Velluto Velvet	
GOLD EYES € 9.507,30	GOLD EYES € 10.608,40	
SILVER EYES € 9.127,80	SILVER EYES € 10.228,90	

CHEST NOUVEAU

Pelle Leather cat.SOFT	Pelle Leather cat.EXTRA	Pelle Leather cat.GLAM	Eco Nabuk Eco Nubuk	Velluto Velvet
€ 495,00	€ 583,00	€ 676,50	€ 284,90	€ 367,40

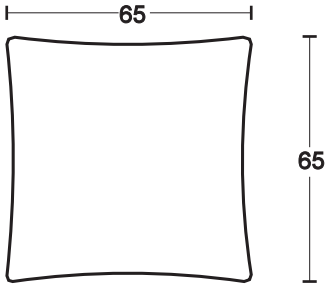

EXTRA CUSCINO - EXTRA CUSCION 65-55-45

Pelle Leather cat.SOFT	Pelle Leather cat.EXTRA	Pelle Leather cat.GLAM	Eco Nabuk Eco Nubuk	Velluto Velvet
€ 456,50	€ 533,50	€ 632,50	€ 266,20	€ 335,50

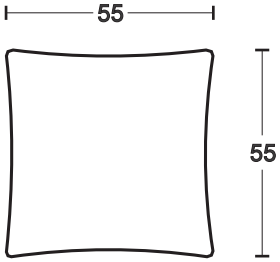

Pelle Leather cat.SOFT	Pelle Leather cat.EXTRA	Pelle Leather cat.GLAM	Eco Nabuk Eco Nubuk	Velluto Velvet
€ 412,50	€ 484,00	€ 561,00	€ 242,00	€ 303,60

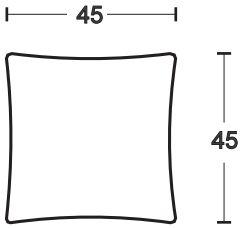

CONFORT-NOUVEAU-264 GOLD-SILVER EYES DIVANO - SOFA

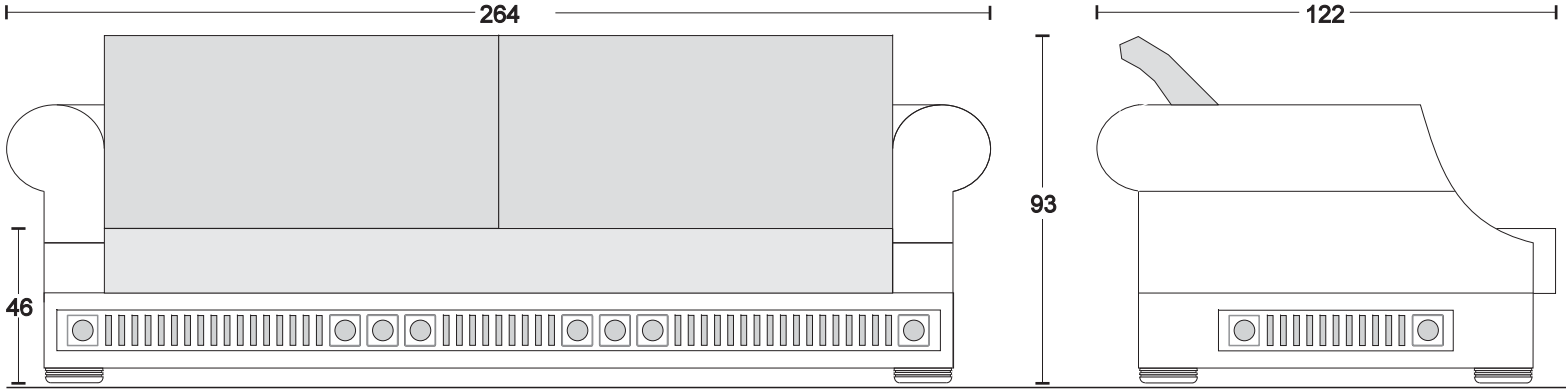

Pelle-Leather cat."SOFT"	Pelle-Leather cat."EXTRA"	Pelle-Leather cat."GLAM"
GOLD EYES € 12.600,50	GOLD EYES € 13.849,00	GOLD EYES € 15.191,00
SILVER EYES € 12.105,50	SILVER EYES € 13.222,00	SILVER EYES € 14.652,00
Eco Nabuk Eco Nubuk	Velluto Velvet	
GOLD EYES € 10.006,70	GOLD EYES € 12.403,60	
SILVER EYES € 9.374,20	SILVER EYES € 11.771,10	

CONFORT-NOUVEAU-193 GOLD-SILVER EYES DIVANO - SOFA

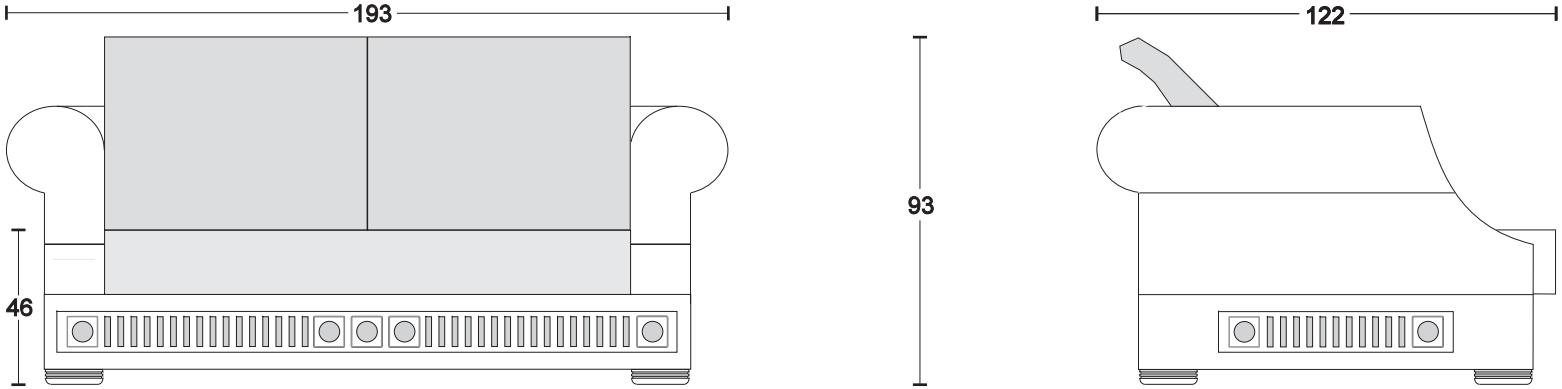

Pelle-Leather cat."SOFT"	Pelle-Leather cat."EXTRA"	Pelle-Leather cat."GLAM"
GOLD EYES € 10.208,00	GOLD EYES € 11.286,00	GOLD EYES € 12.534,50
SILVER EYES € 9.993,50	SILVER EYES € 11.068,20	SILVER EYES € 12.270,50
Eco Nabuk Eco Nubuk	Velluto Velvet	
GOLD EYES € 8.121,30	GOLD EYES € 9.397,30	
SILVER EYES € 7.906,80	SILVER EYES € 9.181,70	

CONFORT-NOUVEAU-125 GOLD-SILVER EYES POLTRONA - ARMCHAIR

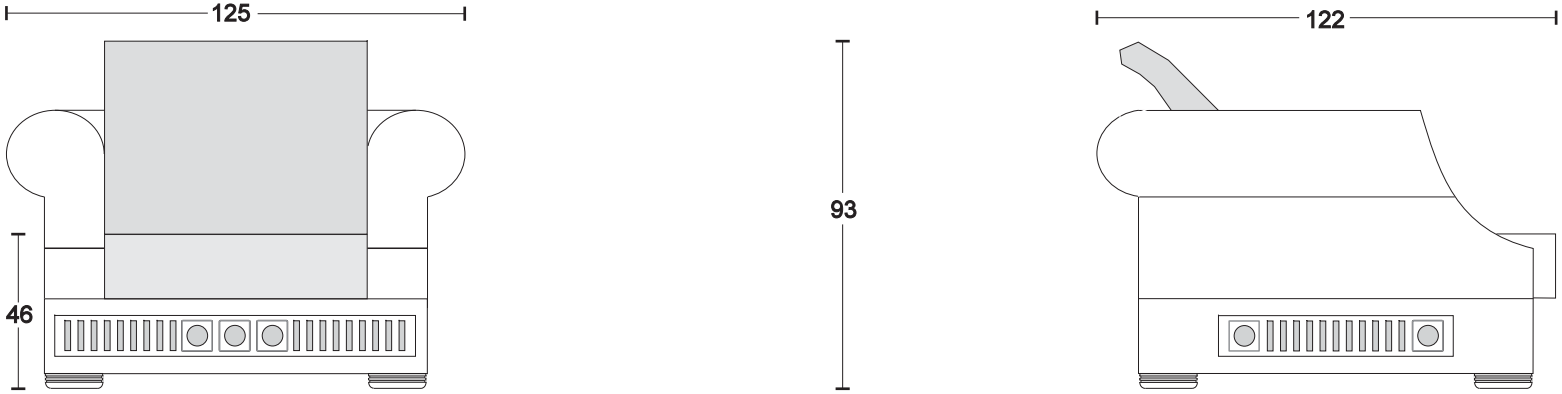

Pelle-Leather cat."SOFT"	Pelle-Leather cat."EXTRA"	Pelle-Leather cat."GLAM"
GOLD EYES € 7.843,00	GOLD EYES € 8.657,00	GOLD EYES € 9.454,50
SILVER EYES € 7.463,50	SILVER EYES € 8.475,50	SILVER EYES € 9.273,00
Eco Nabuk Eco Nubuk	Velluto Velvet	
GOLD EYES € 6.370,10	GOLD EYES € 7.286,40	
SILVER EYES € 6.186,40	SILVER EYES € 7.103,80	

CONFORT-NOUVEAU-264 Lumbar Cushion GOLD-SILVER EYES DIVANO - SOFA

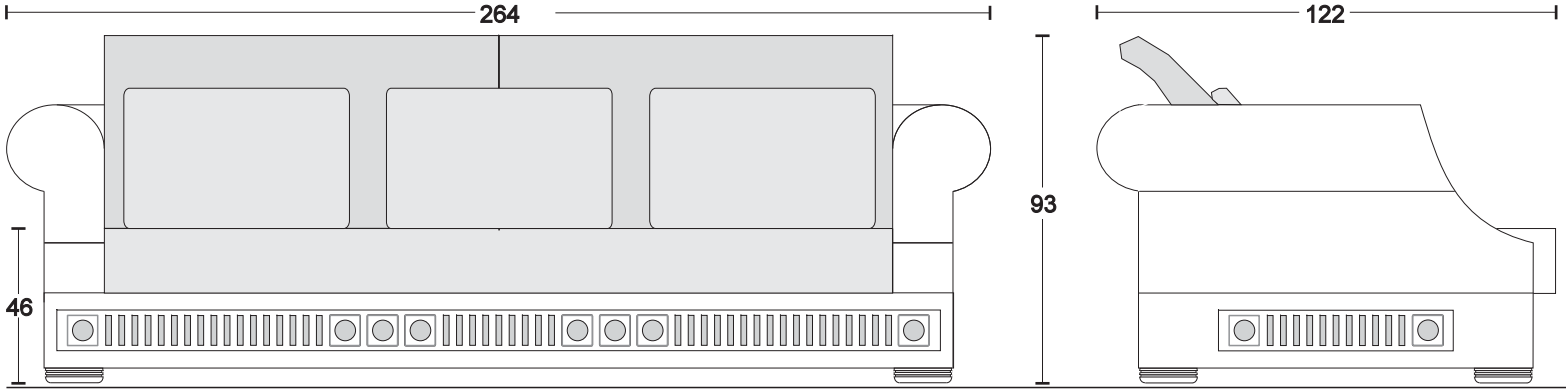

Pelle-Leather cat."SOFT"	Pelle-Leather cat."EXTRA"	Pelle-Leather cat."GLAM"
GOLD EYES € 13.739,00	GOLD EYES € 15.180,00	GOLD EYES € 16.709,00
SILVER EYES € 13.244,00	SILVER EYES € 14.547,50	SILVER EYES € 16.164,50
Eco Nabuk Eco Nubuk	Velluto Velvet	
GOLD EYES € 10.765,70	GOLD EYES € 12.403,60	
SILVER EYES € 10.133,20	SILVER EYES € 11.771,10	

CONFORT-NOUVEAU-193 Lumbar Cushion GOLD-SILVER EYES DIVANO - SOFA

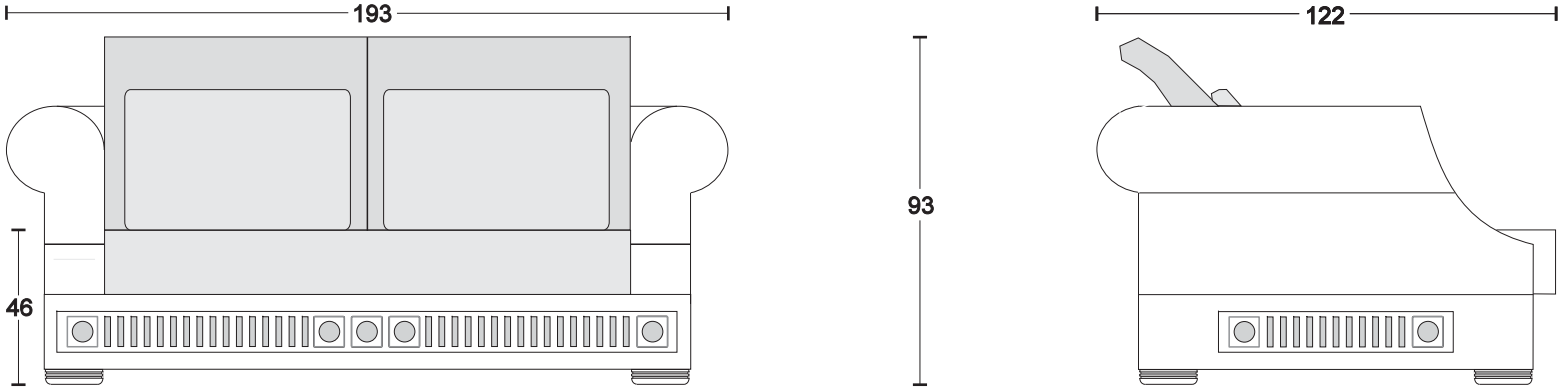

Pelle-Leather cat."SOFT"	Pelle-Leather cat."EXTRA"	Pelle-Leather cat."GLAM"
GOLD EYES € 10.967,00	GOLD EYES € 12.171,50	GOLD EYES € 13.546,50
SILVER EYES € 10.752,50	SILVER EYES € 11.951,50	SILVER EYES € 13.282,50
Eco Nabuk Eco Nubuk	Velluto Velvet	
GOLD EYES € 8.627,30	GOLD EYES € 10.016,60	
SILVER EYES € 8.412,80	SILVER EYES € 9.802,10	

CONFORT-NOUVEAU-125 Lumbar Cushion GOLD-SILVER EYES POLTRONA-ARMCHAIR

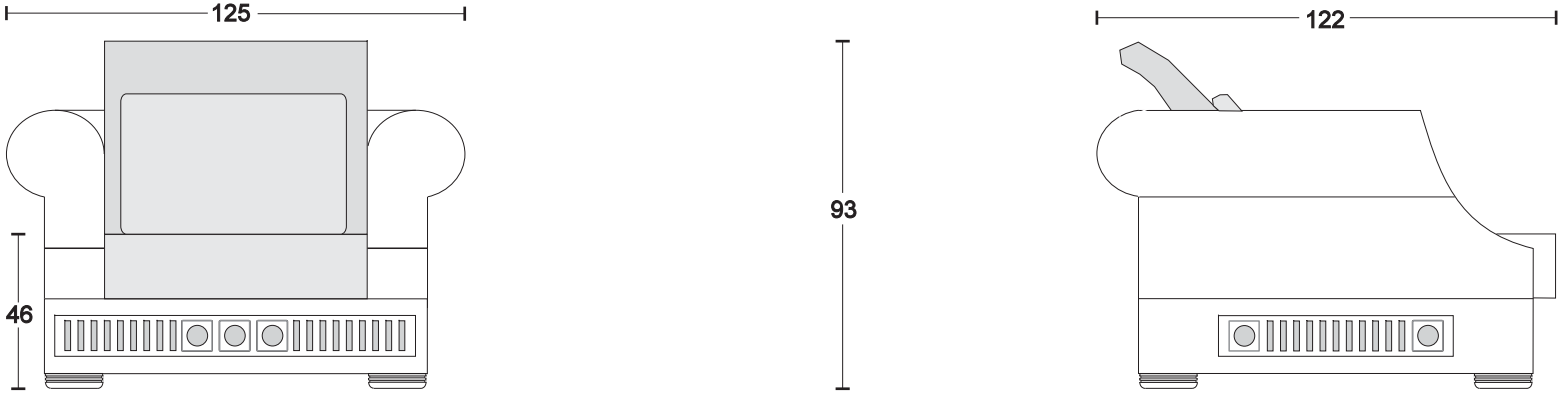

Pelle-Leather cat."SOFT"	Pelle-Leather cat."EXTRA"	Pelle-Leather cat."GLAM"
GOLD EYES € 8.222,50	GOLD EYES € 9.102,50	GOLD EYES € 9.960,50
SILVER EYES € 7.843,00	SILVER EYES € 8.915,50	SILVER EYES € 9.779,00
Eco Nabuk Eco Nubuk	Velluto Velvet	
GOLD EYES € 6.623,10	GOLD EYES € 7.596,60	
SILVER EYES € 6.439,40	SILVER EYES € 7.412,90	

CONFORT NOUVEAU- GOLD/SILVER EYES

CHAISE LOUNGE - DX

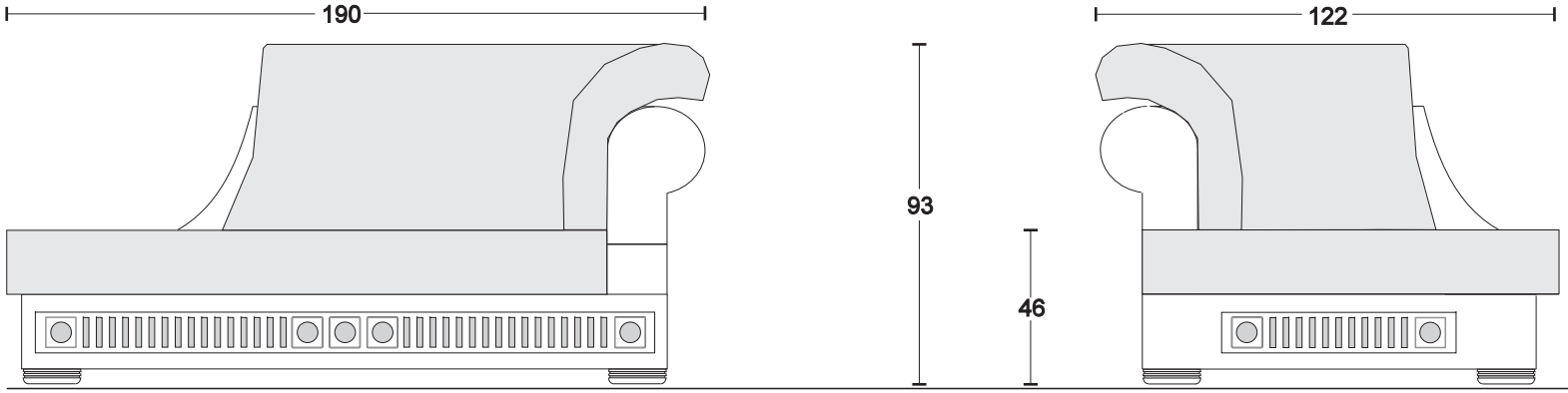

Pelle-Leather cat."SOFT"	Pelle-Leather cat."EXTRA"	Pelle-Leather cat."GLAM"
GOLD EYES € 10.362,00	GOLD EYES € 11.324,50	GOLD EYES € 12.347,50
SILVER EYES € 10.081,50	SILVER EYES € 11.033,00	SILVER EYES € 12.017,50
Eco Nabuk Eco Nubuk	Velluto Velvet	
GOLD EYES € 8.576,70	GOLD EYES € 9.680,00	
SILVER EYES € 8.286,30	SILVER EYES € 9.389,60	

CONFORT NOUVEAU- GOLD/SILVER EYES

CHAISE LOUNGE - SX

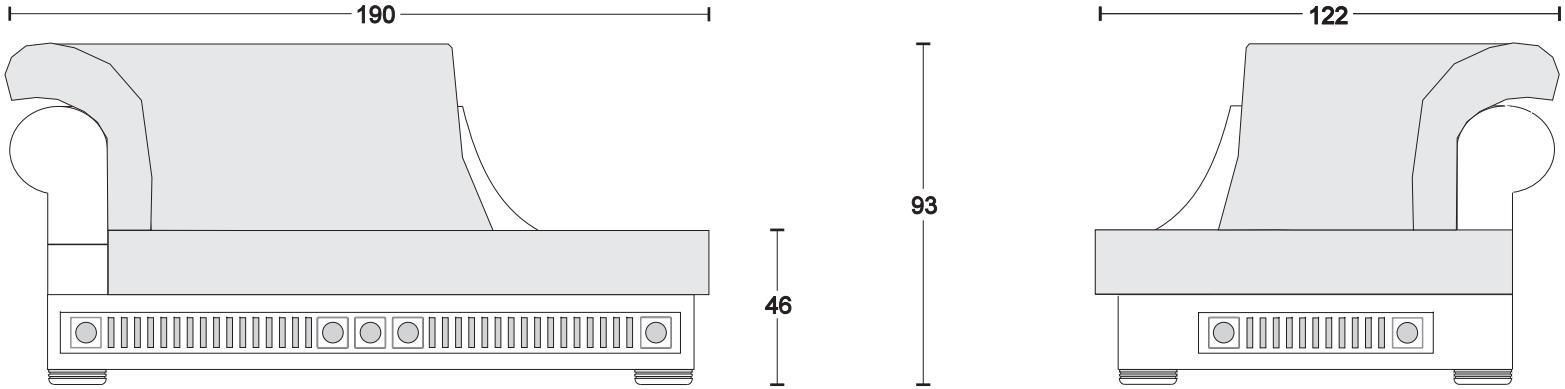

Pelle-Leather cat."SOFT"	Pelle-Leather cat."EXTRA"	Pelle-Leather cat."GLAM"
GOLD EYES € 10.362,00	GOLD EYES € 11.324,50	GOLD EYES € 12.347,50
SILVER EYES € 10.081,50	SILVER EYES € 11.033,00	SILVER EYES € 12.017,50
Eco Nabuk Eco Nubuk	Velluto Velvet	
GOLD EYES € 8.576,70	GOLD EYES € 9.680,00	
SILVER EYES € 8.286,30	SILVER EYES € 9.389,60	

CONFORT NOUVEAU

Pelle Leather cat.SOFT	Pelle Leather cat.EXTRA	Pelle Leather cat.GLAM	Eco Nabuk Eco Nubuk	Velluto Velvet
€ 495,00	€ 583,00	€ 676,50	€ 284,90	€ 367,40

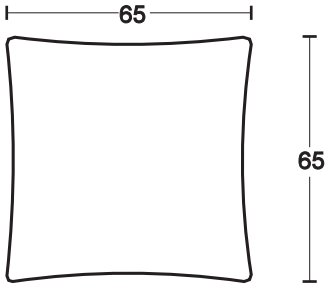

EXTRA CUSCINO - EXTRA CUSCION 65-55-45

Pelle Leather cat.SOFT	Pelle Leather cat.EXTRA	Pelle Leather cat.GLAM	Eco Nabuk Eco Nubuk	Velluto Velvet
€ 456,50	€ 533,50	€ 632,50	€ 266,20	€ 335,50

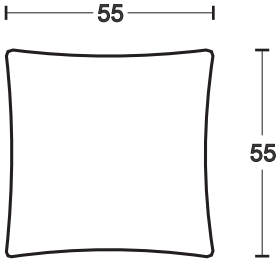

Pelle Leather cat.SOFT	Pelle Leather cat.EXTRA	Pelle Leather cat.GLAM	Eco Nabuk Eco Nubuk	Velluto Velvet
€ 412,50	€ 484,00	€ 561,00	€ 242,00	€ 303,60

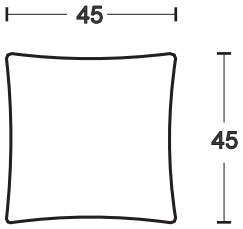

PLAY ROOM - POOL TABLE 10-12 FEET - GOLD-SILVER EYES

10 piedi dimensioni campo gioco cm. 284 x 142 - Dimensioni esterne cm. 320 x 178 - Russo H. 80; Snooker inglese H. 80; Americano H. 78
10 Feet playng fiel dimention cm. 284 x 142 - External dimention cm. 320 x 178 - Russian H. 80; English Snooker H. 80; American H. 78
Con piano in ardesia 40 mm - With playground stone slate 40 mm

12 piedi dimensioni campo gioco cm. 355 x 177 - Dimensioni esterne cm. 391 x 213 - Russo H. 80; Snooker inglese H. 80; Americano H. 78
12 Feet playng fiel dimention cm. 355 x 177 - External dimention cm. 391 x 213 - Russian H. 80; English Snooker H. 80; American H. 78
Con piano in ardesia 40 mm - With playground stone slate 40 mm

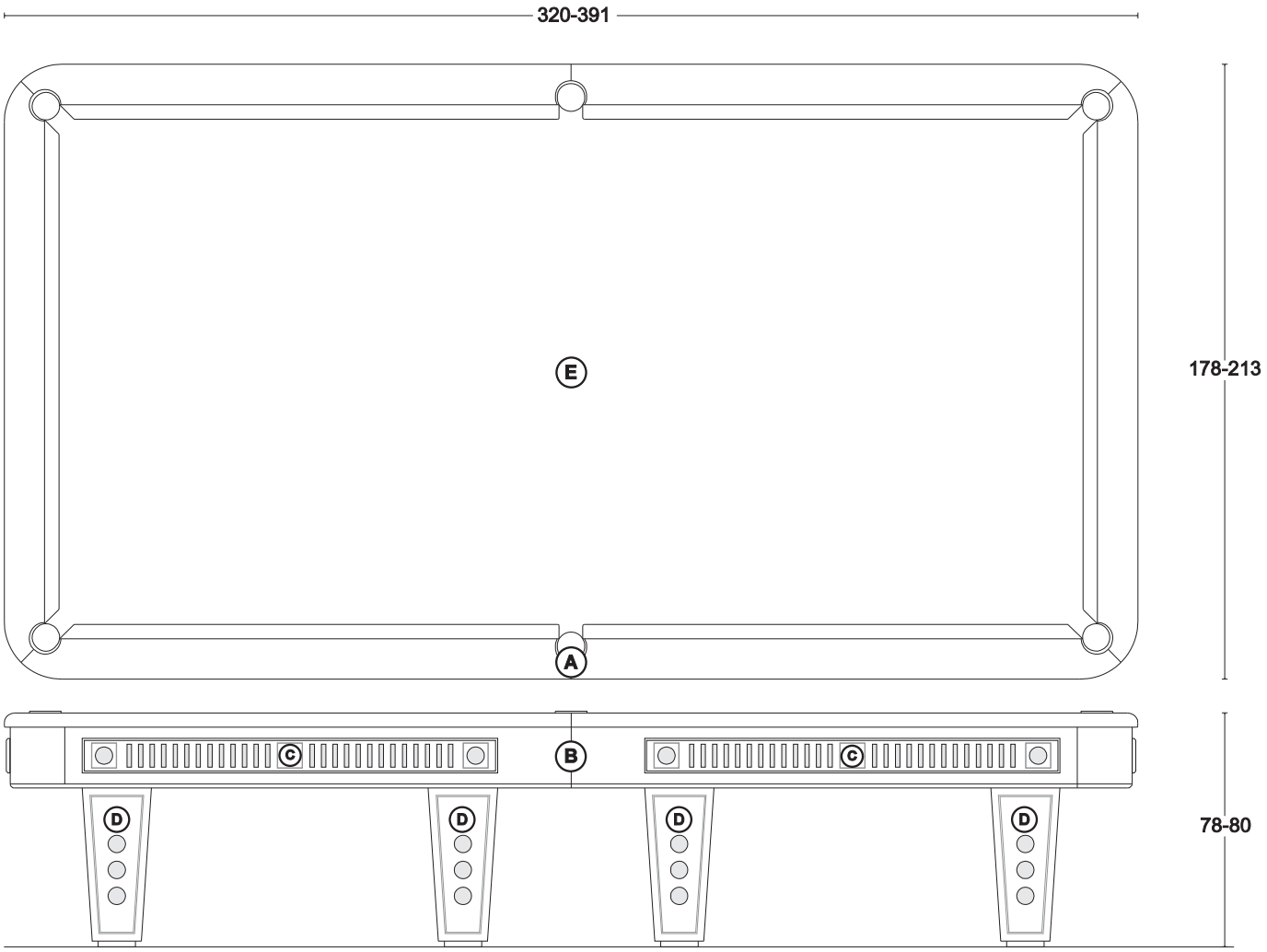

A+B+D	Tutti i Laccato opaco All Opaque laquered	D Decorazioni: Oro foglia con formelle di Murano Oro 24 Kt. sandwich D Decoration: Gold foil with tiles of Murano Glass Gold 24 Kt. sandwich	10 FEET 12 FEET	€ 64.515,00 € 76.406,00
C	Inserti: Tutte laccati opachi con formelle di Murano Oro 24 Kt. sandwich-Decorazioni oro foglia Insert: All Opaque laquered with tiles of Murano Glass Gold 24 Kt. sandwich-Decorations Gold foil			
A+B+D	Tutti i Laccato opaco All Opaque laquered	D Decorazioni: Argento foglia con formelle di Murano puro Argento sandwich D Decoration: Silver foil with tiles of Murano Glass Real Silver sandwich	10 FEET 12 FEET	€ 63.756,00 € 75.647,00
C	Inserti: Tutte laccati opachi con formelle di Murano puro Argento sandwich-Decorazioni argento foglia Insert: All Opaque laquered with tiles of Murano Glass Real Silver sandwich-Decorations Silver foil			
A+B+D	Tutti i Laccato lucido All Glossy laquered	D Decorazioni: Oro foglia con formelle di Murano Oro 24 Kt. sandwich D Decoration: Gold foil with tiles of Murano Glass Gold 24 Kt. sandwich	10 FEET 12 FEET	€ 65.653,50 € 77.544,50
C	Inserti: Tutte laccati lucidi con formelle di Murano Oro 24 Kt. sandwich-Decorazioni oro foglia Insert: All Glossy laquered with tiles of Murano Glass Gold 24 Kt. sandwich-Decorations Gold foil			
A+B+D	Tutti i Laccato lucido All Glossy laquered	D Decorazioni: Argento foglia con formelle di Murano puro Argento sandwich D Decoration: Silver foil with tiles of Murano Glass Real Silver sandwich	10 FEET 12 FEET	€ 64.894,50 € 76.785,50
C	Inserti: Tutte laccati lucido con formelle di Murano puro Argento sandwich-Decorazioni argento fogliai Insert: All Glossy laquered with tiles of Murano Glass Real Silver sandwich-Decorations Silver foil			

E Tappeto biliardo colori diversi - Pool table cloth different colours

PLAY ROOM - POOL LAMP 10-12 FEET - GOLD-SILVER EYES

Lampada a LED per biliardo da 10-12 piedi - 170 Watt - peso kg. 85
LED Lamp for Pool 10-12 Feet - 170 Watt - Weight Kg. 85

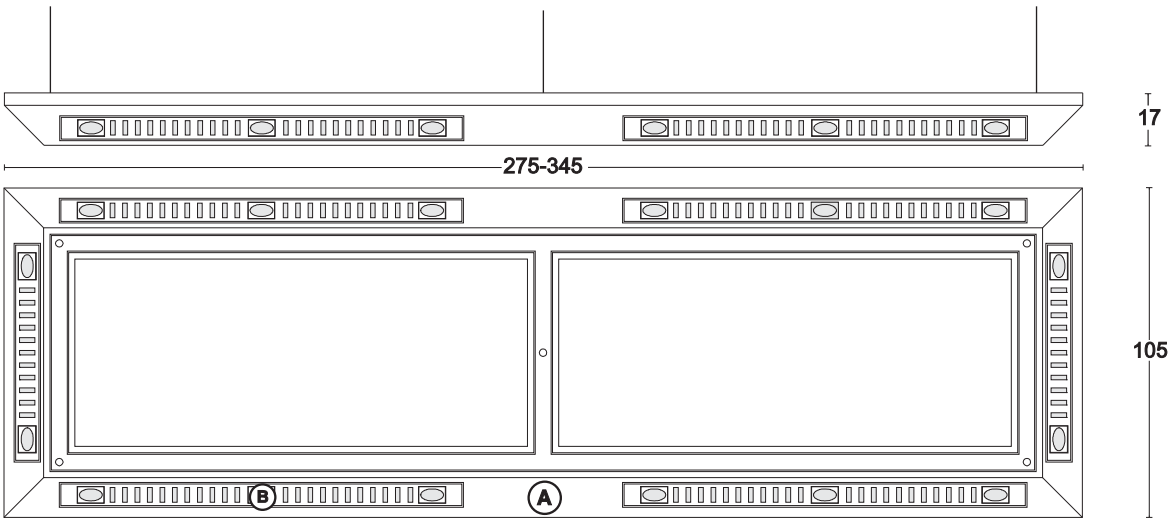

(A) Tutti i Laccato opaco-Decorazioni: Oro foglia - All Opaque laquered-Decoration: Gold

(B) Inserti: Tutte laccati opachi con formelle di Murano Oro 24 Kt. sandwich-Decorazioni oro foglia — **€ 13.788,50**
Insert: All Opaque laquered with tiles of Murano Glass Gold 24 Kt. sandwich-Decorations Gold foil

(B) Inserti: Tutte laccati opachi con formelle di Murano puro Argento sandwich-Decorazioni argento foglia — **€ 12.776,50**
Insert: All Opaque laquered with tiles of Murano Glass Real Silver sandwich-Decorations Silver foil

(A) Tutti i Laccato lucido-Decorazioni oro foglia - All Glossy laquered-Decoration: Gold foil

(B) Inserti: Tutte laccati lucidi con formelle di Murano Oro 24 Kt. sandwich-Decorazioni oro foglia — **€ 14.294,50**
Insert: All Glossy laquered with tiles of Murano Glass Gold 24 Kt. sandwich-Decorations Gold foil

(B) Inserti: Tutte laccati lucido con formelle di Murano puro Argento sandwich-Decorazioni argento fogliai — **€ 13.282,50**
Insert: All Glossy laquered with tiles of Murano Glass Real Silver sandwich-Decorations Silver foil

CUE RACK-BODY-R - GOLD-SILVER EYES

Porta stecche per biliardo da 10-12 piedi con orologio al quarzo
Pool Cue Rack for 10-12 Feet with quarz clock

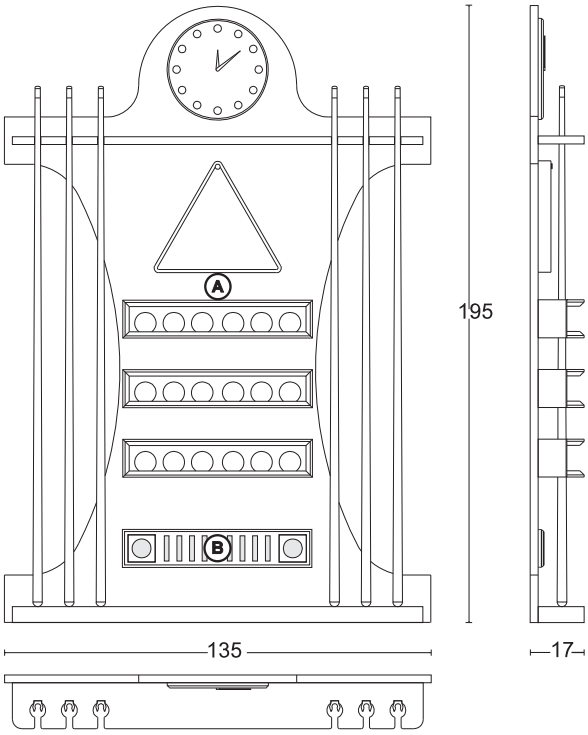

(A) Tutti i Laccato opaco - All Opaque laquered

(B) Inserti: Tutte laccati opachi con formelle di Murano Oro 24 Kt. sandwich-Decorazioni oro foglia — **€ 5.313,00**
Insert: All Opaque laquered with tiles of Murano Glass Gold 24 Kt. sandwich-Decorations Gold foil

(B) Inserti: Tutte laccati opachi con formelle di Murano puro Argento sandwich-Decorazioni argento fogliai — **€ 5.250,30**
Insert: All Opaque laquered with tiles of Murano Glass Real Silver sandwich-Decorations Silver foil

(A) Tutti i Laccato lucido - All Glossy laquered

(B) Inserti: Tutte laccati lucidi con formelle di Murano Oro 24 Kt. sandwich-Decorazioni oro foglia — **€ 6.072,00**
Insert: All Glossy laquered with tiles of Murano Glass Gold 24 Kt. sandwich-Decorations Gold foil

Inserti: Tutte laccati lucido con formelle di Murano puro Argento sandwich-Decorazioni argento fogliai — **€ 6.009,30**
Insert: All Glossy laquered with tiles of Murano Glass Real Silver sandwich-Decorations Silver foil

- stecche in legno L.-Standard - da cm.160 (set 6 pezzi) - wooden Pool cue L.-Standard - cm. 160 (set 6 pieces) — **€ 2.428,80**
- Set biglie Ø 52,4 mm. Snooker inglese - Ø 57mm. per Pool americano - Ø 68 mm per Piramide russa — **€ 607,20**
  Set balls Ø 52,4 mm. english Snooker - Ø 57mm. American Pool - Ø 68 mm Russian Piramid

PLAY ROOM - POOL TABLE 8-9 FEET - GOLD-SILVER EYES

8 piedi dimensioni campo gioco cm. 224 x 112 - Dimensioni esterne cm. 260 x 148 - Russo H. 80; Snooker inglese H. 80; Americano H. 78
8 Feet playng fiel dimention cm. 224 x 112 - External dimention cm. 260 x 148 - Russian H. 80; English Snooker H. 80; American H. 78
Con piano in ardesia 25 mm - With playground stone slate 25 mm

9 piedi dimensioni campo gioco cm. 254 x 112 - Dimensioni esterne cm. 290 x 163 - Russo H. 80; Snooker inglese H. 80; Americano H. 78
9 Feet playng fiel dimention cm. 254 x 127 - External dimention cm. 290 x 163 - Russian H. 80; English Snooker H. 80; American H. 78
Con piano in ardesia 25 mm - With playground stone slate 25 mm

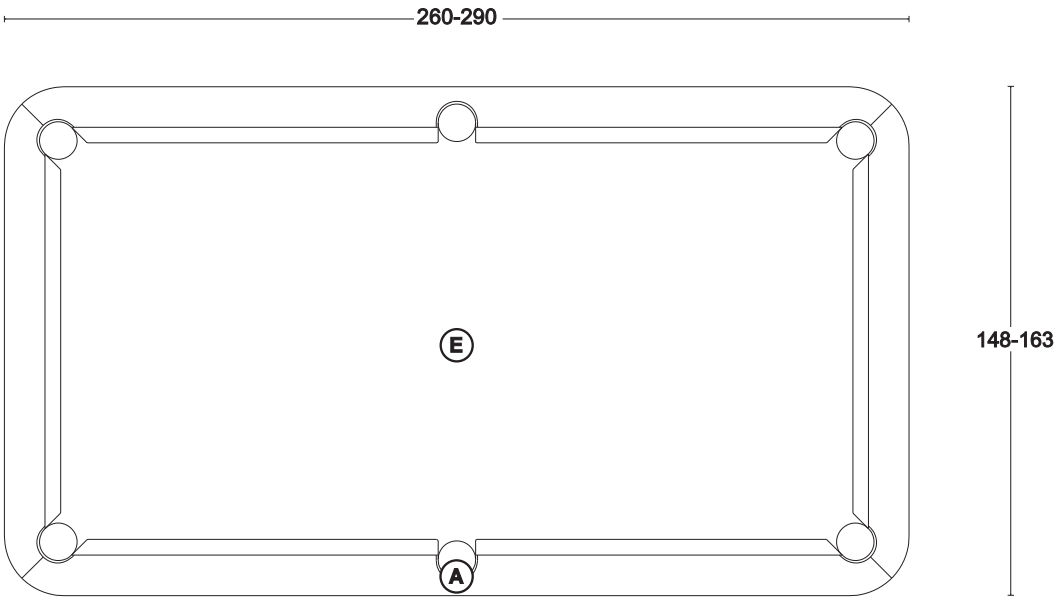

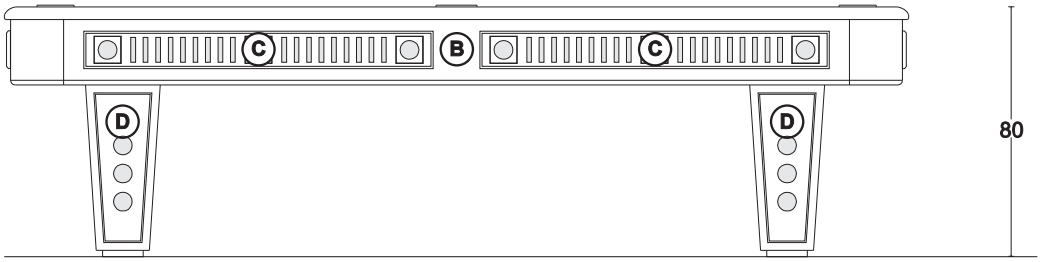

A+B+D	Tutti i Laccato opaco All Opaque laquered	D Decorazioni: Oro foglia con formelle di Murano Oro 24 Kt. sandwich D Decoration: Gold foil with tiles of Murano Glass Gold 24 Kt. sandwich	8 FEET € 44.148,50 9 FEET € 44.148,50
C	Inserti: Tutte laccati opachi con formelle di Murano Oro 24 Kt. sandwich-Decorazioni oro foglia Insert: All Opaque laquered with tiles of Murano Glass Gold 24 Kt. sandwich-Decorations Gold foil		
A+B+D	Tutti i Laccato opaco All Opaque laquered	D Decorazioni: Argento foglia con formelle di Murano puro Argento sandwich D Decoration: Silver foil with tiles of Murano Glass Real Silver sandwich	8 FEET € 43.769,00 9 FEET € 43.769,00
C	Inserti: Tutte laccati opachi con formelle di Murano puro Argento sandwich-Decorazioni argento fogliai Insert: All Opaque laquered with tiles of Murano Glass Real Silver sandwich-Decorations Silver foil		
A+B+D	Tutti i Laccato lucido All Glossy laquered	D Decorazioni: Oro foglia con formelle di Murano Oro 24 Kt. sandwich D Decoration: Gold foil with tiles of Murano Glass Gold 24 Kt. sandwich	8 FEET € 45.160,50 9 FEET € 45.160,50
C	Inserti: Tutte laccati lucidi con formelle di Murano Oro 24 Kt. sandwich-Decorazioni oro foglia Insert: All Glossy laquered with tiles of Murano Glass Gold 24 Kt. sandwich-Decorations Gold foil		
A+B+D	Tutti i Laccato lucido All Glossy laquered	D Decorazioni: Argento foglia con formelle di Murano puro Argento sandwich D Decoration: Silver foil with tiles of Murano Glass Real Silver sandwich	8 FEET € 44.781,00 9 FEET € 44.781,00
C	Inserti: Tutte laccati lucido con formelle di Murano puro Argento sandwich-Decorazioni argento fogliai Insert: All Glossy laquered with tiles of Murano Glass Real Silver sandwich-Decorations Silver foil		

E Tappeto biliardo colori diversi - Pool table cloth different colours

PLAY ROOM - POOL LAMP 8-9 FEET - GOLD-SILVER EYES

Lampada a LED per biliardo da 8-9 piedi - 130 Watt - peso kg. 70
LED Lamp for Pool 8-9 Feet - 130 Watt - Weight Kg. 70

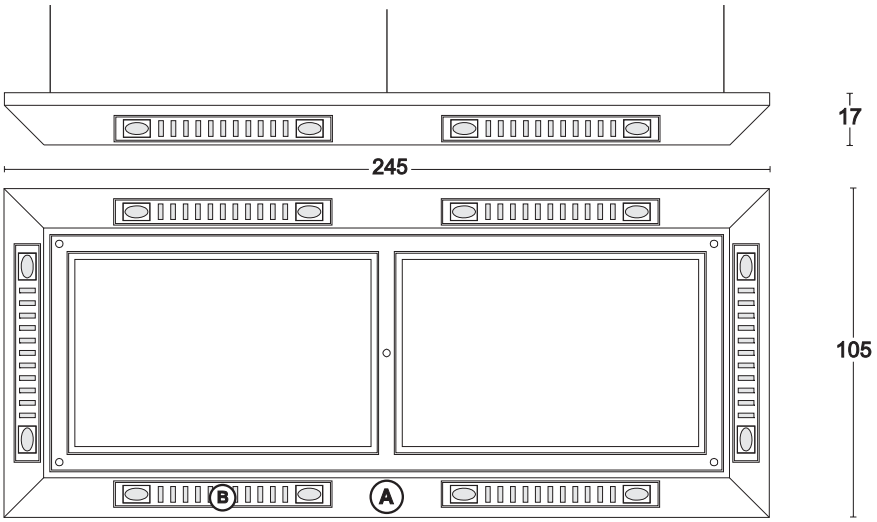

(A) Tutti i Laccato opaco-Decorazioni: Oro foglia - All Opaque laquered-Decoration: Gold

(B) Inserti: Tutte laccati opachi con formelle di Murano Oro 24 Kt. sandwich-Decorazioni oro foglia — **€ 11.005,50**
Insert: All Opaque laquered with tiles of Murano Glass Gold 24 Kt. sandwich-Decorations Gold foil

(B) Inserti: Tutte laccati opachi con formelle di Murano puro Argento sandwich-Decorazioni argento foglia — **€ 10.499,50**
Insert: All Opaque laquered with tiles of Murano Glass Real Silver sandwich-Decorations Silver foil

(A) Tutti i Laccato lucido-Decorazioni oro foglia - All Glossy laquered-Decoration: Gold foil

(B) Inserti: Tutte laccati lucidi con formelle di Murano Oro 24 Kt. sandwich-Decorazioni oro foglia — **€ 11.764,50**
Insert: All Glossy laquered with tiles of Murano Glass Gold 24 Kt. sandwich-Decorations Gold foil

(B) Inserti: Tutte laccati lucido con formelle di Murano puro Argento sandwich-Decorazioni argento foglia — **€ 11.258,50**
Insert: All Glossy laquered with tiles of Murano Glass Real Silver sandwich-Decorations Silver foil

CUE RACK-BODY-A - GOLD-SILVER EYES

Porta stecche per biliardo da 8-9 piedi con orologio al quarzo
Pool Cue Rack for 8-9 Feet with quarz clock

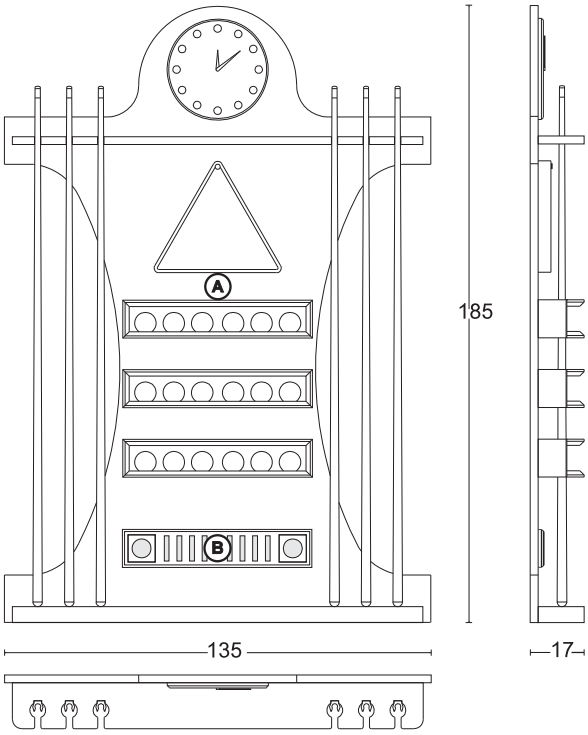

(A) Tutti i Laccato opaco - All Opaque laquered

(B) Inserti: Tutte laccati opachi con formelle di Murano Oro 24 Kt. sandwich-Decorazioni oro foglia — **€ 5.313,00**
Insert: All Opaque laquered with tiles of Murano Glass Gold 24 Kt. sandwich-Decorations Gold foil

(B) Inserti: Tutte laccati opachi con formelle di Murano puro Argento sandwich-Decorazioni argento foglia — **€ 5.250,30**
Insert: All Opaque laquered with tiles of Murano Glass Real Silver sandwich-Decorations Silver foil

(A) Tutti i Laccato lucido - All Glossy laquered

(B) Inserti: Tutte laccati lucidi con formelle di Murano Oro 24 Kt. sandwich-Decorazioni oro foglia — **€ 6.072,00**
Insert: All Glossy laquered with tiles of Murano Glass Gold 24 Kt. sandwich-Decorations Gold foil

Inserti: Tutte laccati lucido con formelle di Murano puro Argento sandwich-Decorazioni argento foglia — **€ 6.009,30**
Insert: All Glossy laquered with tiles of Murano Glass Real Silver sandwich-Decorations Silver foil

- stecche in legno L.-Standard - da cm.145 (set 6 pezzi) - wooden Pool cue L.-Standard - cm. 145 (set 6 pieces) — **€ 1.821,60**
- Set biglie Ø 52,4 mm. Snooker inglese - Ø 57mm. per Pool americano - Ø 68 mm per Piramide russa — **€ 607,20**
  Set balls Ø 52,4 mm. english Snooker - Ø 57mm. American Pool - Ø 68 mm Russian Piramid

PIRAMID 224 > 262

VISMARADESIGN®

TV - LIFT & FIRE - 158 - PIRAMID

Struttura per Home Cinema - a parete (con salita TV motorizzata computerizzata e telecomandata - completo di Bio-Camino ecologico)
Home Cinema - Wall Rack (motorized, computerized and remote-controlled TV lift system - provided with ecological bio-fireplace)

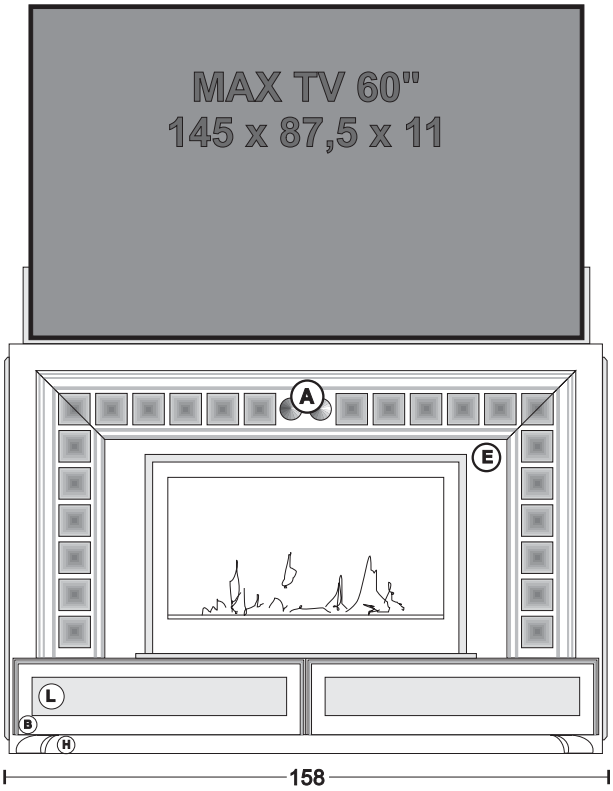

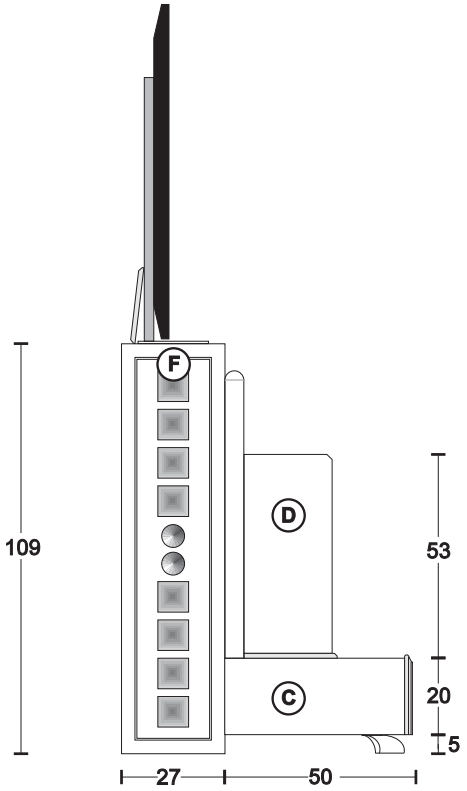

Finiture e combinazioni - Finishings and combinations

Ⓐ+Ⓕ Metalblack/Bianco - Piramid Argento/Oro
(Metalblack/White - Piramid Silver/Gold foill)

Ⓑ+Ⓒ+Ⓓ+Ⓔ Tutti i laccati opachi - decorazioni argento/oro foglia
(all opaque laquering - silver/gold foil decorations)

Ⓗ Argento/Oro foglia
(Silver/Gold foill)

Ⓛ Vetri:Bianco/Fume
(glass white or fume)

€ 19.783,50

Ⓐ+Ⓕ Nero/Bianco Lucido -Piramid B/N opaco
(gloss black/white - Piramid opaque black/white)

Ⓑ+Ⓒ+Ⓓ+Ⓔ Nero/Bianco opaco - decorazioni oro/argento foglia
(opaque black/white- gold/silver foil decorations)

Ⓗ Argento/Oro foglia
(Silver/Gold foill)

Ⓛ Vetri:Bianco/Fume
(glass white or fume)

€ 20.163,00

TV - LIFT & BAR - 158 - PIRAMID

Struttura per Home Cinema - a parete (con salita TV motorizzata computerizzata e telecomandata - completo di Mobile a 3 ante push)
Home Cinema - Wall Rack (with motorized, computerized and remote-controlled TV lift system - provided with a 3 push-doors cabinet)

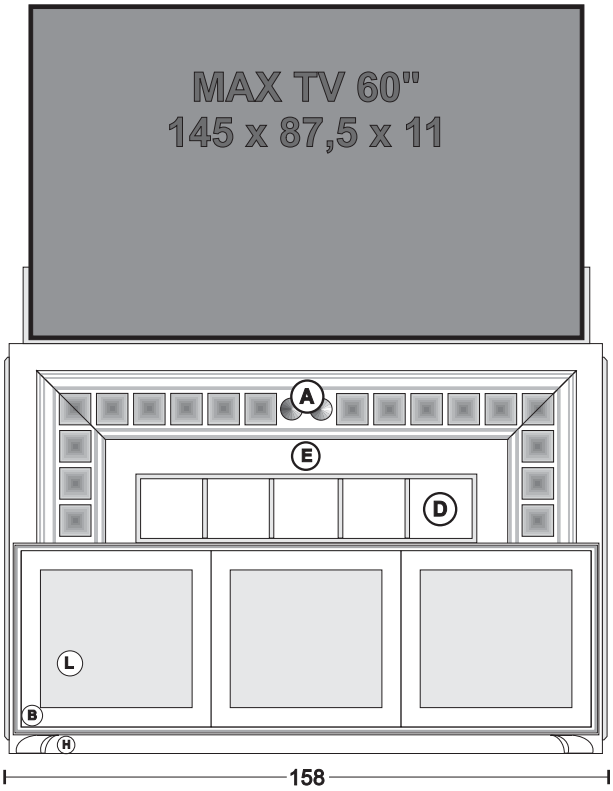

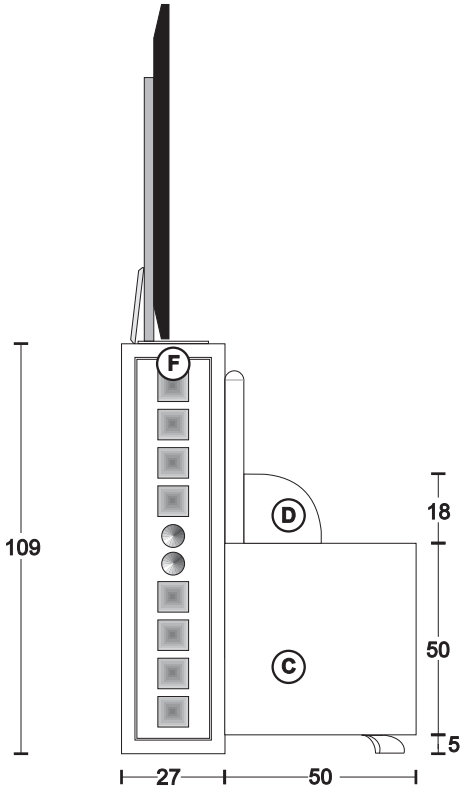

Finiture e combinazioni - Finishings and combinations

Ⓐ+Ⓕ Metalblack/Bianco - Piramid Argento/Oro
(Metalblack/White - Piramid Silver/Gold foill)

Ⓑ+Ⓒ+Ⓓ+Ⓔ Tutti i laccati opachi - decorazioni argento/oro foglia
(all opaque laquering - silver/gold foil decorations)

Ⓗ Argento/Oro foglia
(Silver/Gold foill)

Ⓛ Vetri:Bianco/Fume
(glass white or fume)

€ 18.128,00

Ⓐ+Ⓕ Nero/Bianco Lucido -Piramid B/N opaco
(gloss black/white - Piramid opaque black/white)

Ⓑ+Ⓒ+Ⓓ+Ⓔ Nero/Bianco opaco - decorazioni oro/argento foglia
(opaque black/white- gold/silver foil decorations)

Ⓗ Argento/Oro foglia
(Silver/Gold foill)

Ⓛ Vetri:Bianco/Fume
(glass white or fume)

€ 18.507,50

TV - LIFT & FIRE - 182 - PIRAMID

Struttura per Home Cinema - a parete (con salita TV motorizzata computerizzata e telecomandata - completo di Bio-Camino ecologico)
Home Cinema - Wall Rack (motorized, computerized and remote-controlled TV lift system - provided with ecological bio-fireplace)

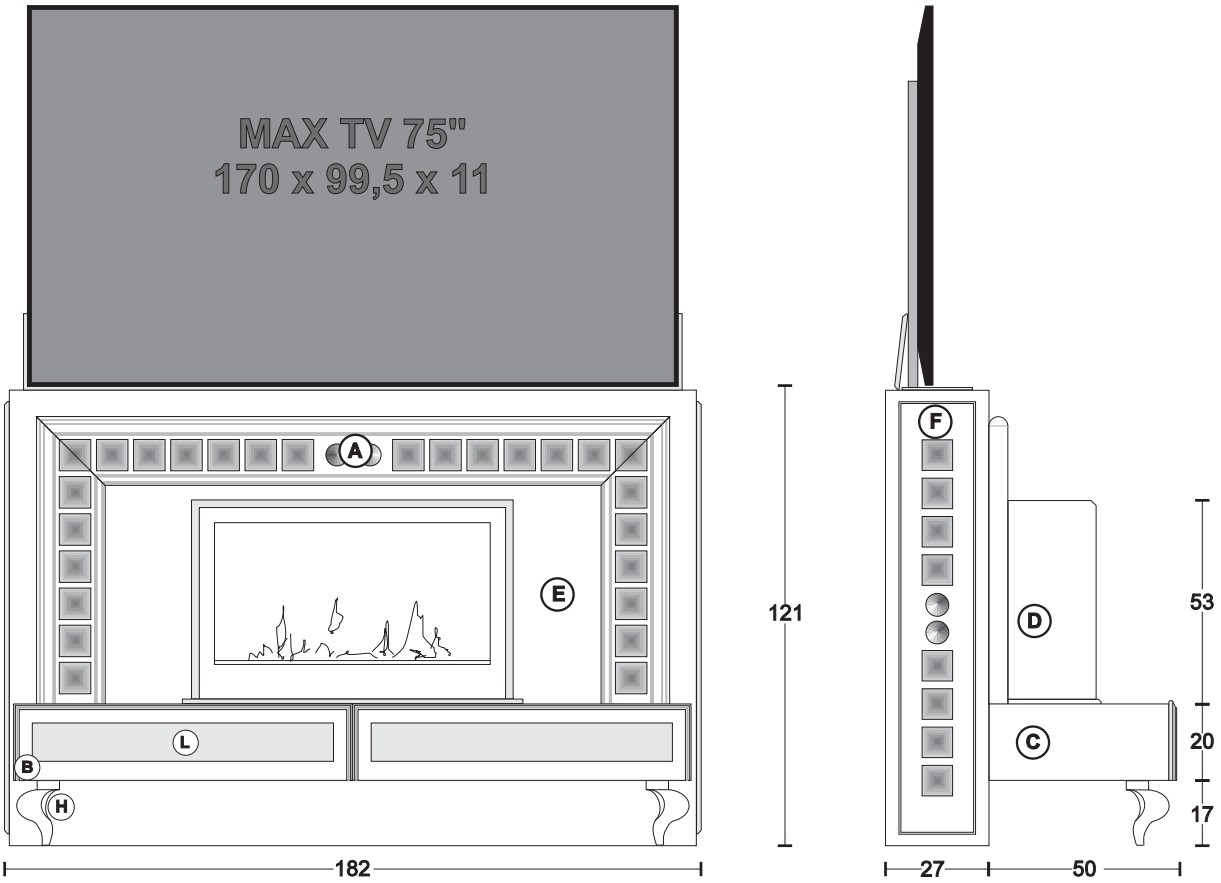

Finiture e combinazioni - Finishings and combinations

A + F Metalblack/Bianco - Piramid Argento/Oro
(Metalblack/White - Piramid Silver/Gold foill)

B + C + D + E Tutti i laccati opachi - decorazioni argento/oro foglia
(all opaque laquering - silver/gold foil decorations)

H Argento/Oro foglia
(Silver/Gold foill)

L Vetri:Bianco/Fume
(glass white or fume)

€ 20.174,00

A + F Nero/Bianco Lucido -Piramid B/N opaco
(gloss black/white - Piramid opaque black/white)

B + C + D + E Nero/Bianco opaco - decorazioni oro/argento foglia
(opaque black/white- gold/silver foil decorations)

H Argento/Oro foglia
(Silver/Gold foill)

L Vetri:Bianco/Fume
(glass white or fume)

€ 20.553,50

TV - LIFT & BAR - 182 - PIRAMID

Struttura per Home Cinema - a parete (con salita TV motorizzata computerizzata e telecomandata - completo di Mobile a 4 ante push)
Home Cinema - Wall Rack (with motorized, computerized and remote-controlled TV lift system - provided with a 4 push-doors cabinet)

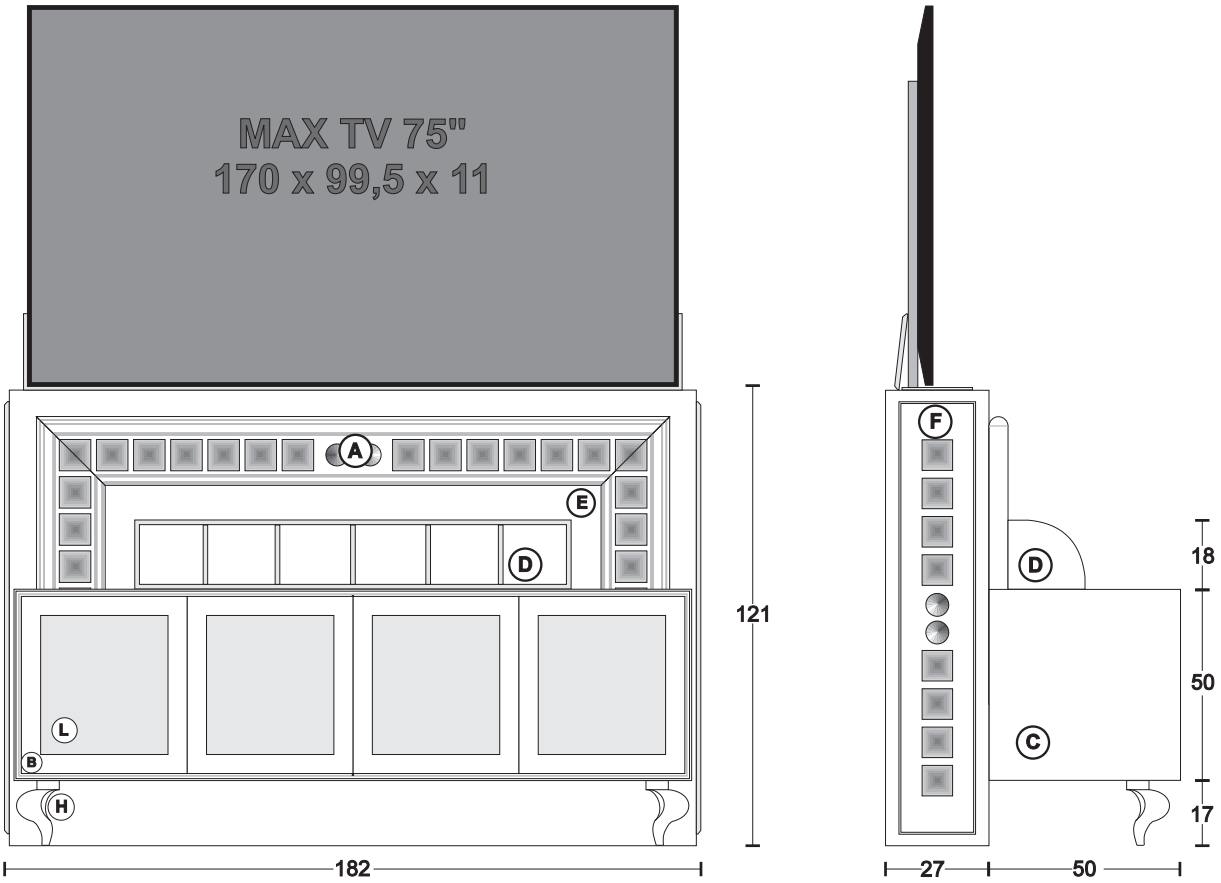

Finiture e combinazioni - Finishings and combinations

Ⓐ+Ⓕ Metalblack/Bianco - Piramid Argento/Oro
(Metalblack/White - Piramid Silver/Gold foill)

Ⓑ+Ⓒ+Ⓓ+Ⓔ Tutti i laccati opachi - decorazioni argento/oro foglia
(all opaque laquering - silver/gold foil decorations)

Ⓗ Argento/Oro foglia
(Silver/Gold foill)

Ⓛ Vetri:Bianco/Fume
(glass white or fume)

€ 18.623,00

Ⓐ+Ⓕ Nero/Bianco Lucido -Piramid B/N opaco
(gloss black/white - Piramid opaque black/white)

Ⓑ+Ⓒ+Ⓓ+Ⓔ Nero/Bianco opaco - decorazioni oro/argento foglia
(opaque black/white- gold/silver foil decorations)

Ⓗ Argento/Oro foglia
(Silver/Gold foill)

Ⓛ Vetri:Bianco/Fume
(glass white or fume)

€ 19.000,30

SLIDING HOME CINEMA - PIRAMID

Struttura per Home Cinema - a parete con apertura motorizzata, computerizzata e telecomandata - luci led laterali
Home Cinema - Wall Rack - Motorized and computerized opening, with remote control - LED lights on sides

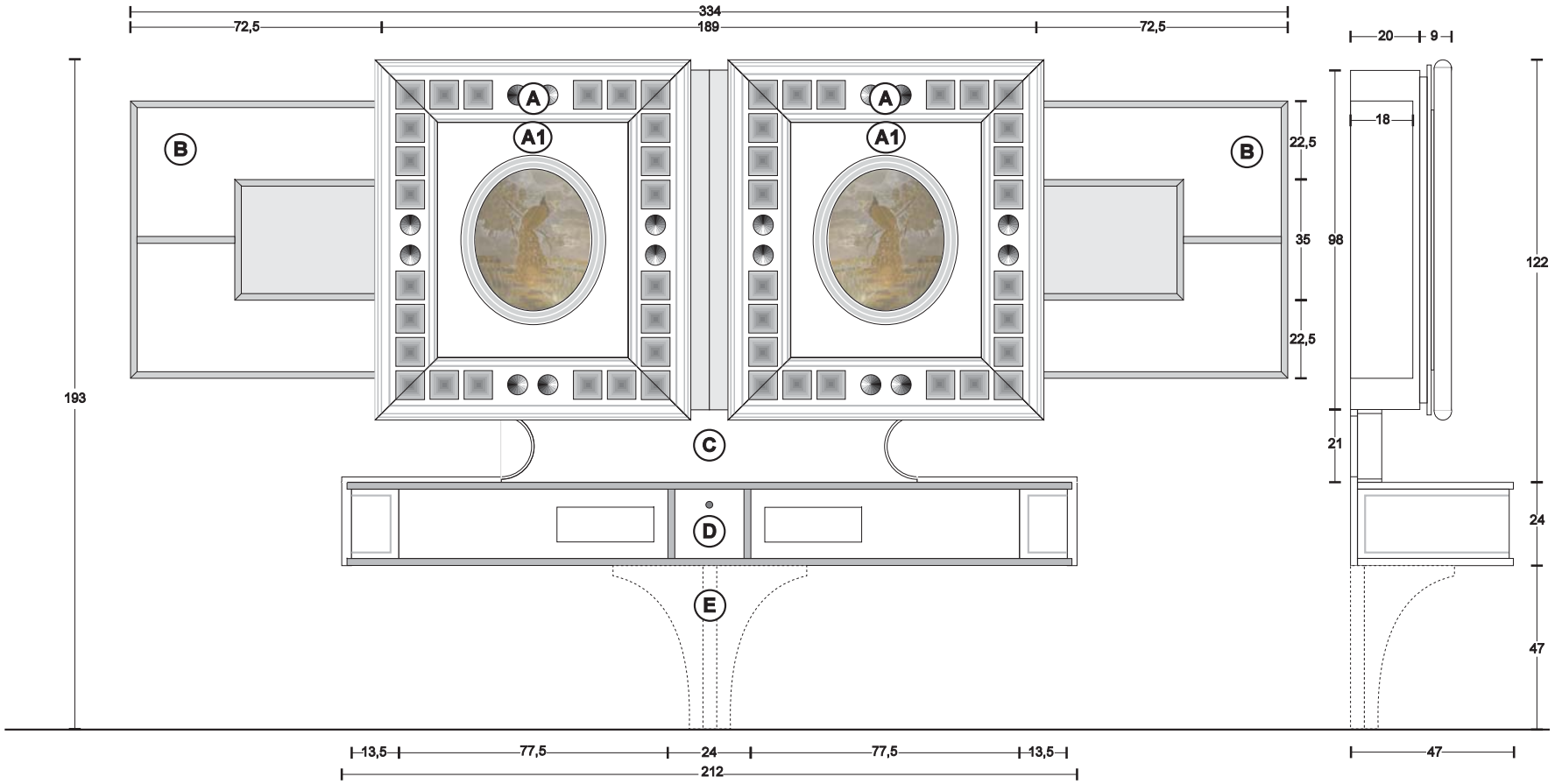

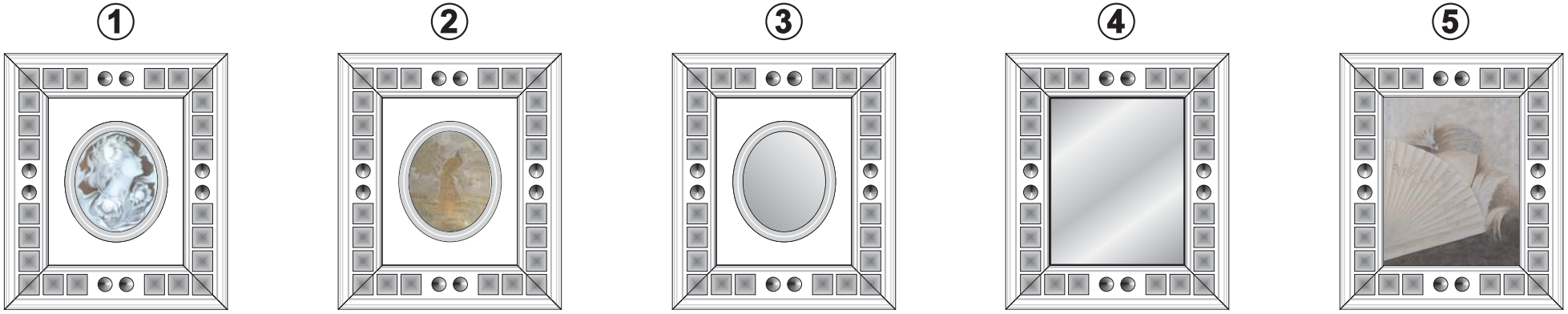

SLIDING HOME CINEMA - PIRAMID

Struttura per Home Cinema - a parete con apertura motorizzata, computerizzata e telecomandata - luci led laterali
Home Cinema - Wall Rack - Motorized and computerized opening, with remote control - LED lights on sides

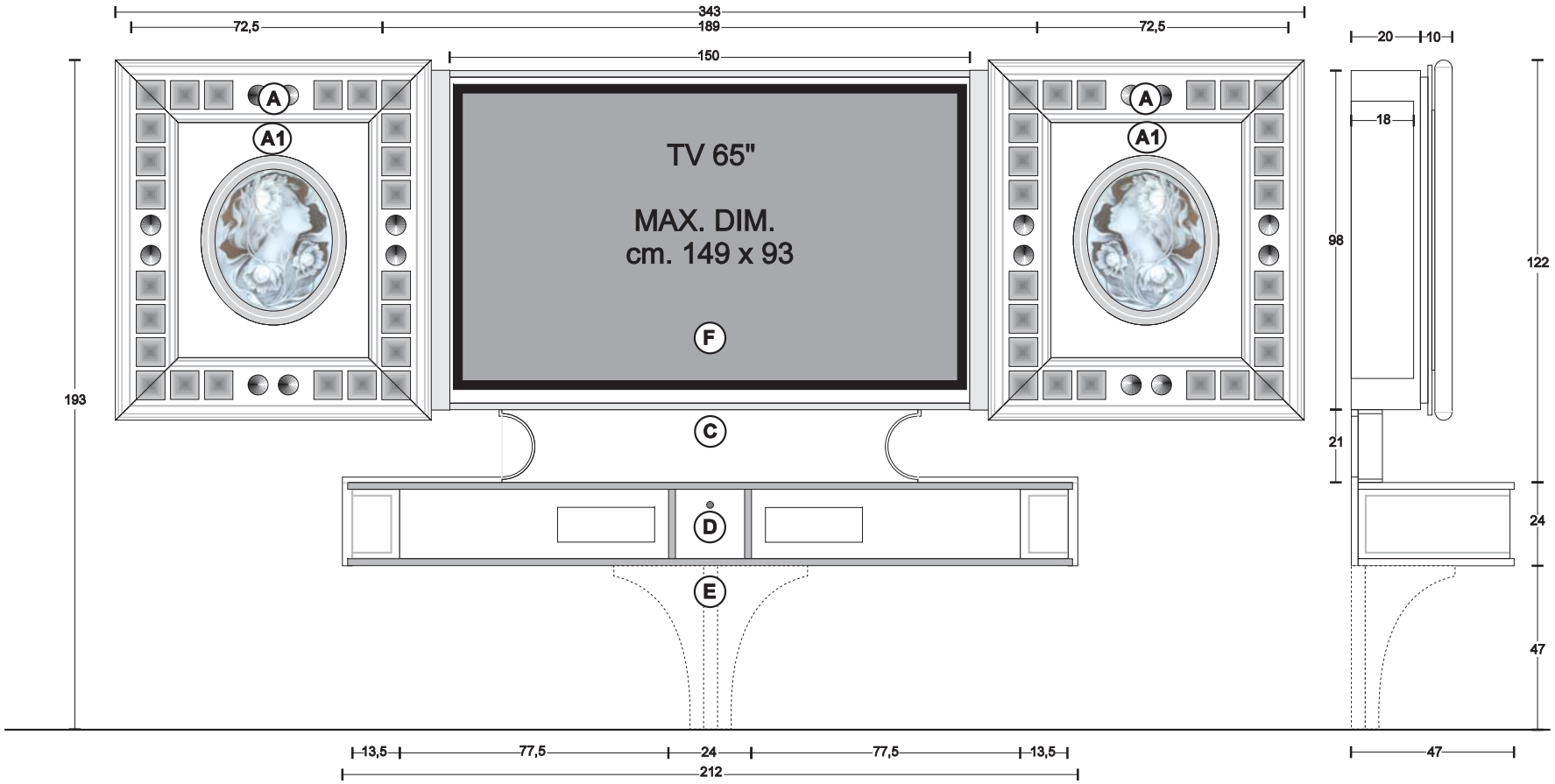

(A) Metalblack/bianco Piramid Oro/Argento
Metalblack/White-Piramid Gold/Silver foil

(A1) + (C) + (E) + (F) Tutti i laccati opachi
all opaque laquering

(B) Tutti i laccati opachi-Decorazioni Oro/Argento
all opaque laquering-decoration gold/silver foil

(D) Top Oro/Argento Foglia-parti rimanenti
tutti i laccati opachi-Decorazioni Oro/Argento
Top gold/silver foil-remaining parts all opaque laquering-decoration gold/silver foil

Con-with (1) EURO 25.553,00 Con-with (2) EURO 28.855,20 Con-with (3) EURO 24.895,20 Con-with (4) EURO 24.920,50 Con-with (5) EURO 25.780,70

(A) Nero/Bianco Lucido-Piramid B/N opaco
Gloss Black/White-Piramid opaque Black/White

(A1) + (C) + (E) + (F) Bianco/Nero opaco
opaque White/Black

(B) Bianco/nero opaco-Decorazioni Argento
opaque White/Black-decoration Silverfoil

(D) Top Argento Foglia-parti rimanenti
Bianco/nero opaco-Decorazioni Argento Foglia
Top silver foil-remaining parts opaque White/Black laquering-decoration silver foil

Con-with (1) EURO 26.350,50 Con-with (2) EURO 29.639,50 Con-with (3) EURO 25.679,50 Con-with (4) EURO 25.718,00 Con-with (5) EURO 26.578,20

REVOLVING HOME CINEMA - PIRAMID

Struttura per Home Cinema - centro stanza con rotazione TV motorizzata, computerizzata e telecomandata
Home Cinema - Standing rack - Motorized and computerized revolving TV , with remote control

LATO -SIDE "A"

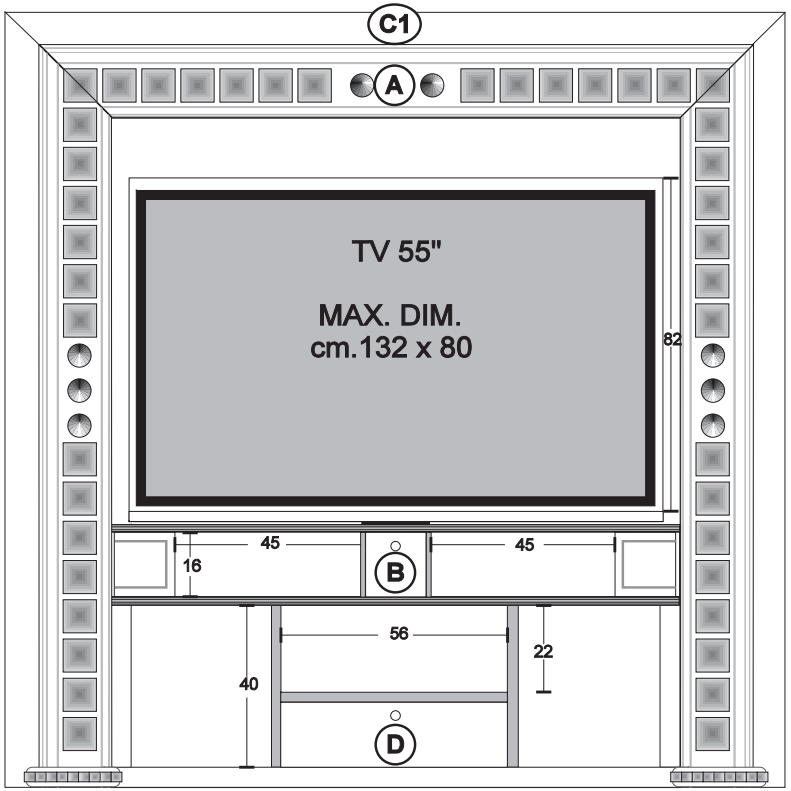

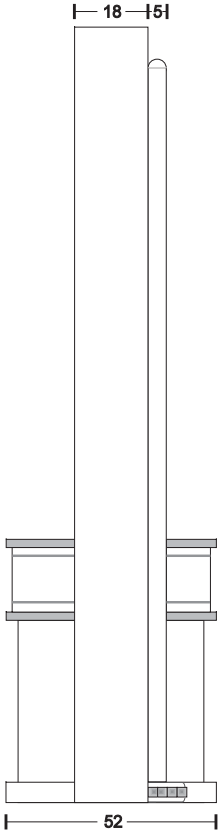

LATO -SIDE "B"

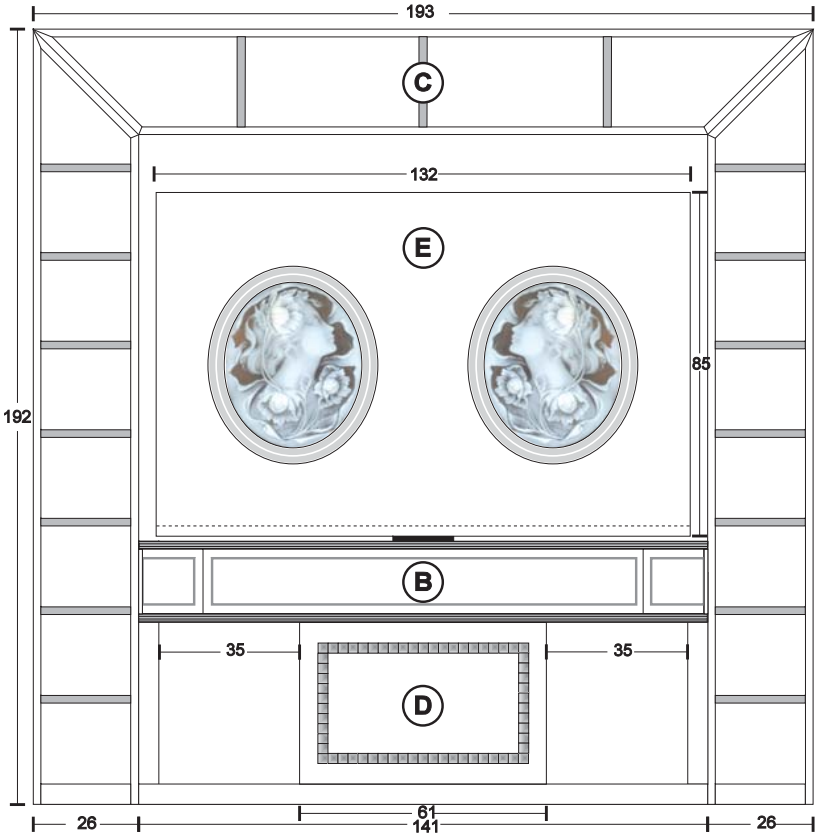

REVOLVING HOME CINEMA - PIRAMID

Struttura per Home Cinema - centro stanza con rotazione TV motorizzata, computerizzata e telecomandata
Home Cinema - Standing rack - Motorized and computerized revolving TV , with remote control

DECORAZIONE PANNELLO LATO "B" -DECORATION PANEL SIDE "B"

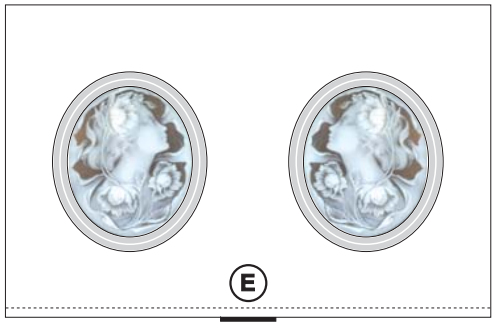

1 ovale con Cammeo
Oval with Cameo

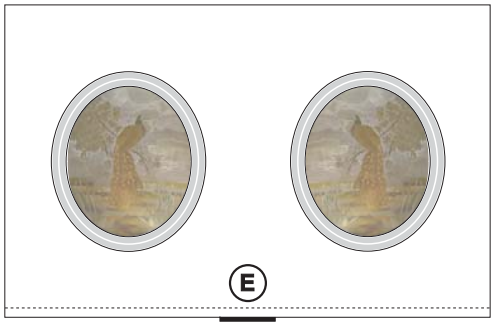

2 Ovale con Pavone Artistico oro 23/22/20/18/16/12 Carati
Oval with Artistic peacock Gold 23/22/20/18/16/12 carats

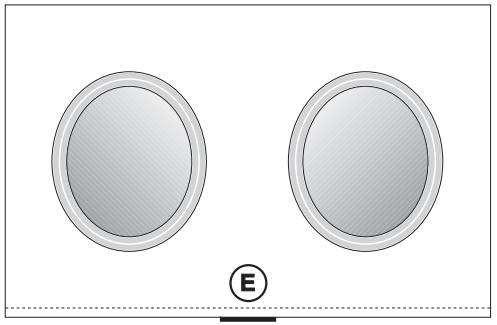

3 Ovale con specchio bisellato
Oval with bevelled mirror

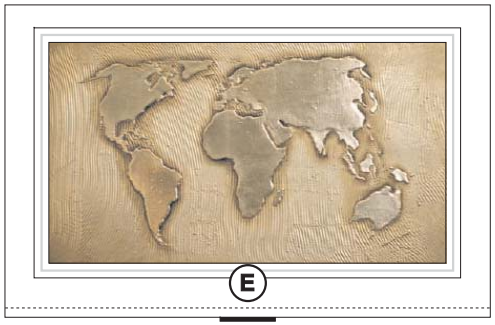

4 "Il Mondo" decorazione in rilievo in foglia platino
"The world" decoration in relief - platinum foil

A Metalblack/Bianco+Piramid Oro/Argento
Metalblack/White-Piramid Gold/Silver foil

C1+C+E+D Tutti i laccati opachi-Decorazioni Oro/Argento
all opaque laquering-decoration gold/silver foil

B Oro/Argento Foglia/tutti i laccati opachi
Gold/silver foil all opaque laquering

Con-with 1 EURO 17.204,00 | Con-with 2 EURO 20.658,00 | Con-with 3 EURO 16.622,10 | Con-with 4 EURO 18.152,20

A Nero/Bianco Lucido-Piramidi B/N opaco
Gloss Black/White-piramid opaque Black/White

C1+C+E+D Bianco/Nero opaco-Decorazioni Argento
opaque White/Black-decoration silver foil

B Bianco/Nero opaco-Argento Foglia
opaque White/Black-Silver foil

Con-with 1 EURO 18.001,50 | Con-with 2 EURO 21.186,00 | Con-with 3 EURO 17.153,40 | Con-with 4 EURO 18.683,50

THE WALL HOME CINEMA - PIRAMID

Struttura per Home Cinema - a parete
Home Cinema - Wall Rack

(H) (decorazioni argento/oro foglia)
(silver/gold foil decorations)

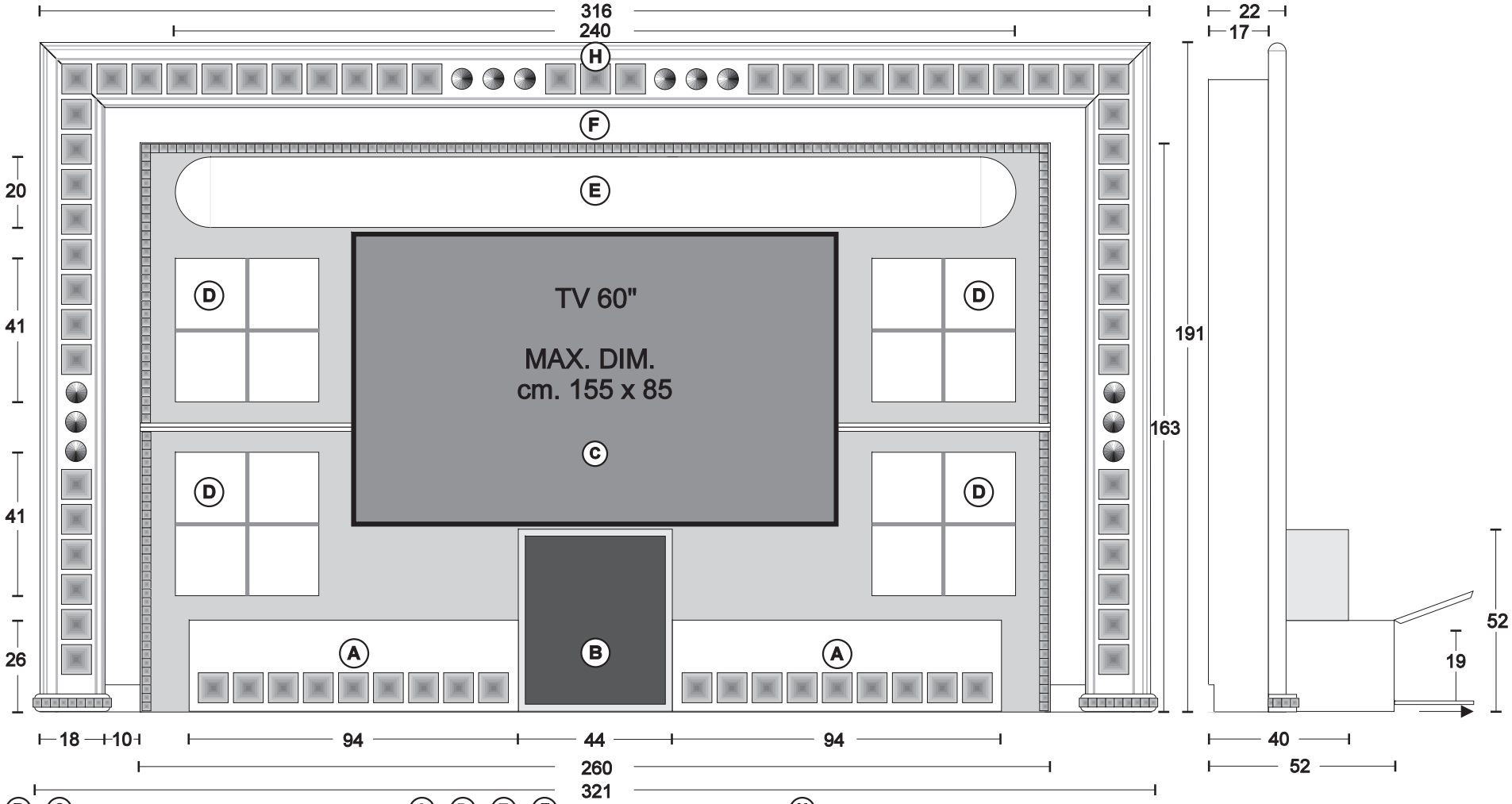

B+C	ORO FOGLIA - ARGENTO FOGLIA (gold foil/silver foil)	A+D+E+F	METALBLACK	H	METALBLACK con piramidi e profili ORO/ARGENTO FOGLIA METALBLACK with piramids and outlines GOLD/SILVER FOIL	€ 16.419,70
B+C	ORO FOGLIA - ARGENTO FOGLIA (gold foil/silver foil)	A+D+E+F	BIANCO OPACO opaque white	H	BIANCO OPACO con piramidi e profili ORO/ARGENTO FOGLIA OPAQUE WHITE with piramids and outlines GOLD/SILVER FOIL	€ 16.419,70
B+C	ARGENTO FOGLIA (silver foil)	A+D+E+F	BIANCO OPACO opaque white	H	BIANCO LUCIDO con piramidi bianco opaco gloss white with piramids opaque white	€ 17.058,80
B+C	ARGENTO FOGLIA (silver foil)	A+D+E+F	NERO OPACO opaque black	H	NERO LUCIDO con piramidi nero opaco gloss black with piramids opaque white	€ 17.058,80

THE FRAME HOME CINEMA - PIRAMID

Struttura per Home Cinema - a parete (con luci retro-pannello diffuse)
Home Cinema - Wall Rack (with spreading back-panel lighting)

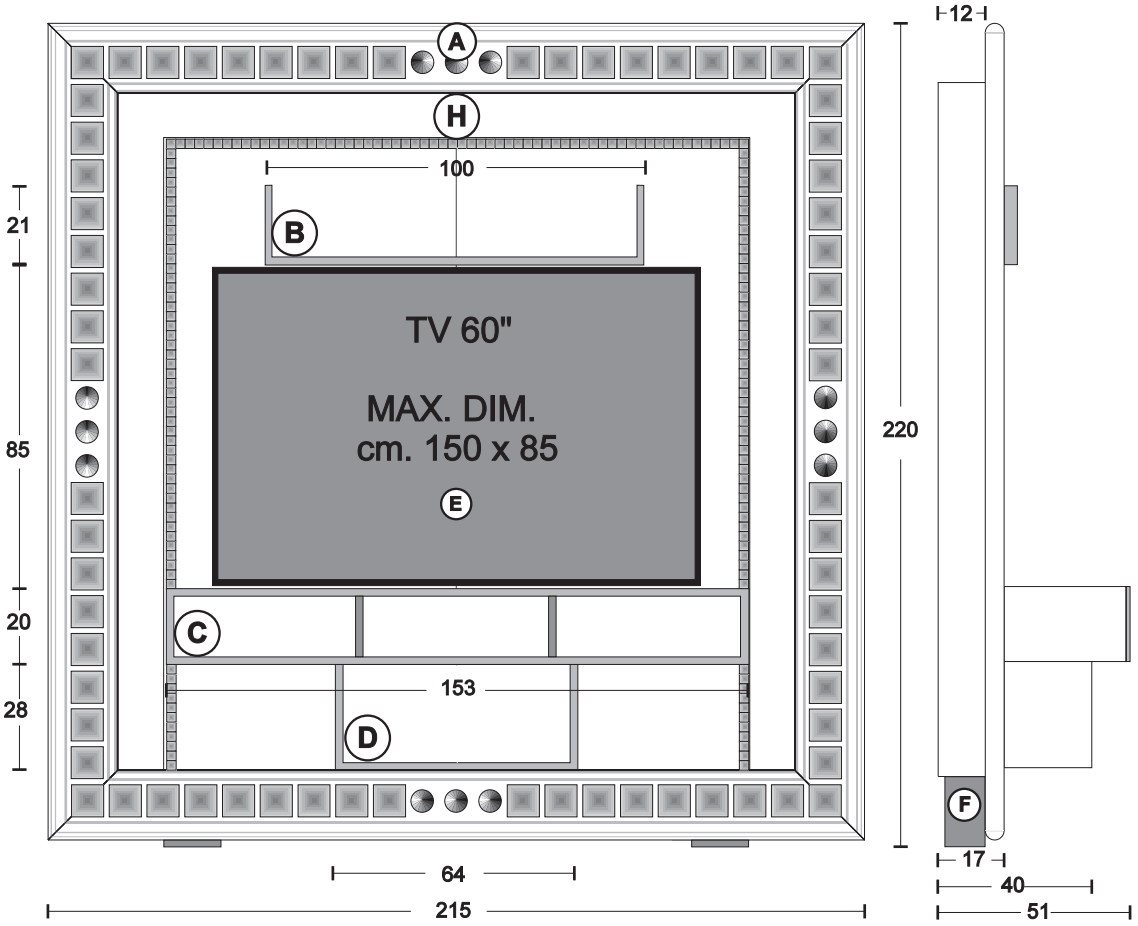

Finiture e combinazioni - Finishings and combinations

C ORO FOGLIA (gold foil) H METALGOLD	A METALBLACK con piramidi ORO FOGLIA METALBLACK with piramids GOLD FOIL	B+D+E+F	METALBLACK	€ 11.101,20
C ARGENTO FOGLIA (silver foil) H METALSILVER	A METALBLACK con piramidi ARGENTO FOGLIA METALBLACK with piramids SILVER FOIL	B+D+E+F	METALBLACK	€ 11.101,20
C ORO FOGLIA (Gold foil) H METALGOLD	A BIANCO con piramidi ORO FOGLIA WHITE with piramids GOLD FOIL	B+D+E+F	BIANCO (White)	€ 11.101,20
C ARGENTO FOGLIA (Silver foil) H METALSILVER	A BIANCO con piramidi ARGENTO FOGLIA WHITE with piramids ARGENTO FOIL	B+D+E+F	BIANCO (White)	€ 11.101,20
C+A Nero lucido con piramidi nero opaco gloss black with piramids Opaque black Bianco lucido con piramidi bianco opaco gloss white with piramids Opaque white decorazioni argento foglia-silver foil decorations		B+D+E+F	NERO o BIANCO (black or white)	H METALSILVER € 11.926,20

THE FRAME CONTAINER-BAR - PIRAMID

Mobile con scaffali a giorno e ante scorrevoli - a parete (con led bianchi sotto piani orizzontali) ①②③④
Open wall-container, with sliding doors- Horizontal shelves enlightened by white LEDs ①②③④

-Sezione
-Section

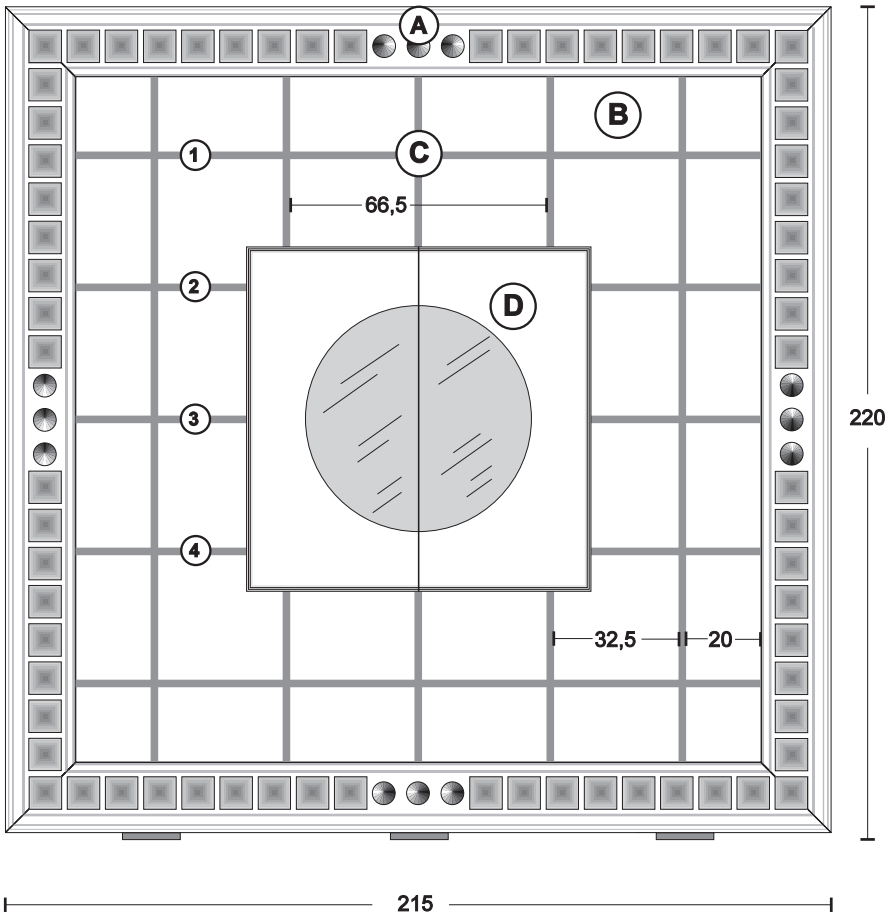

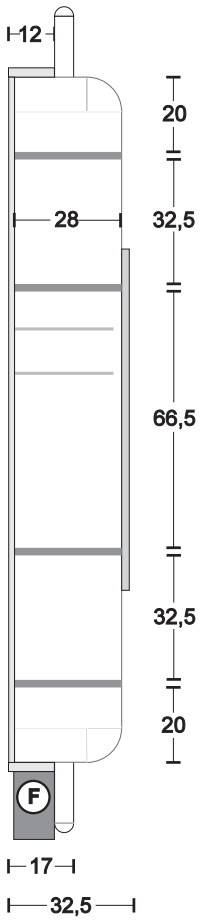

Finiture e combinazioni - Finishings and combinations

Ⓐ METALBLACK con piramidi ORO FOGLIA METALBLACK with piramids GOLD FOIL	Ⓑ ORO FOGLIA (gold foil)	Ⓒ+Ⓕ+Ⓓ METALBLACK	€ 14.726,80
Ⓐ METALBLACK con piramidi ARGENTO FOGLIA METALBLACK with piramids SILVER FOIL	Ⓑ ARGENTO FOGLIA (silver foil)	Ⓒ+Ⓕ+Ⓓ METALBLACK	€ 14.726,80
Ⓐ BIANCO con piramidi ORO FOGLIA Opaque White with piramids GOLD FOIL	Ⓑ ORO FOGLIA (gold foil)	Ⓒ+Ⓕ+Ⓓ BIANCO White	€ 14.726,80
Ⓐ BIANCO con piramidi ARGENTO FOGLIA Opaque White with piramids SILVER FOIL	Ⓑ ARGENTO FOGLIA (silver foil)	Ⓒ+Ⓕ+Ⓓ BIANCO White	€ 14.726,80
Ⓐ Nero lucido con piramidi nero opaco gloss black with piramids Opaque black decorazioni argento foglia-silver foil decorations	Ⓑ ARGENTO FOGLIA (silver foil)	Ⓒ+Ⓕ NERO (black) Ⓓ NERO LUCIDO (gloss black)	€ 15.173,40
Ⓐ Bianco lucido con piramidi bianco opaco gloss white with piramids Opaque white decorazioni argento foglia-silver foil decorations	Ⓑ ARGENTO FOGLIA (silver foil)	Ⓒ+Ⓕ BIANCO (white) Ⓓ BIANCO LUCIDO (gloss white)	€ 15.173,40

THE FRAME "BIG MIRROR" - PIRAMID

Specchio a parete completo di consolle a 2 cassetti e vano a giorno - led bianchi perimetrali - bolle perimetrali su specchio
Wall-mirror with 2-drawer-consolle and open compartment- white leds on perimeter- bubbles on mirror border

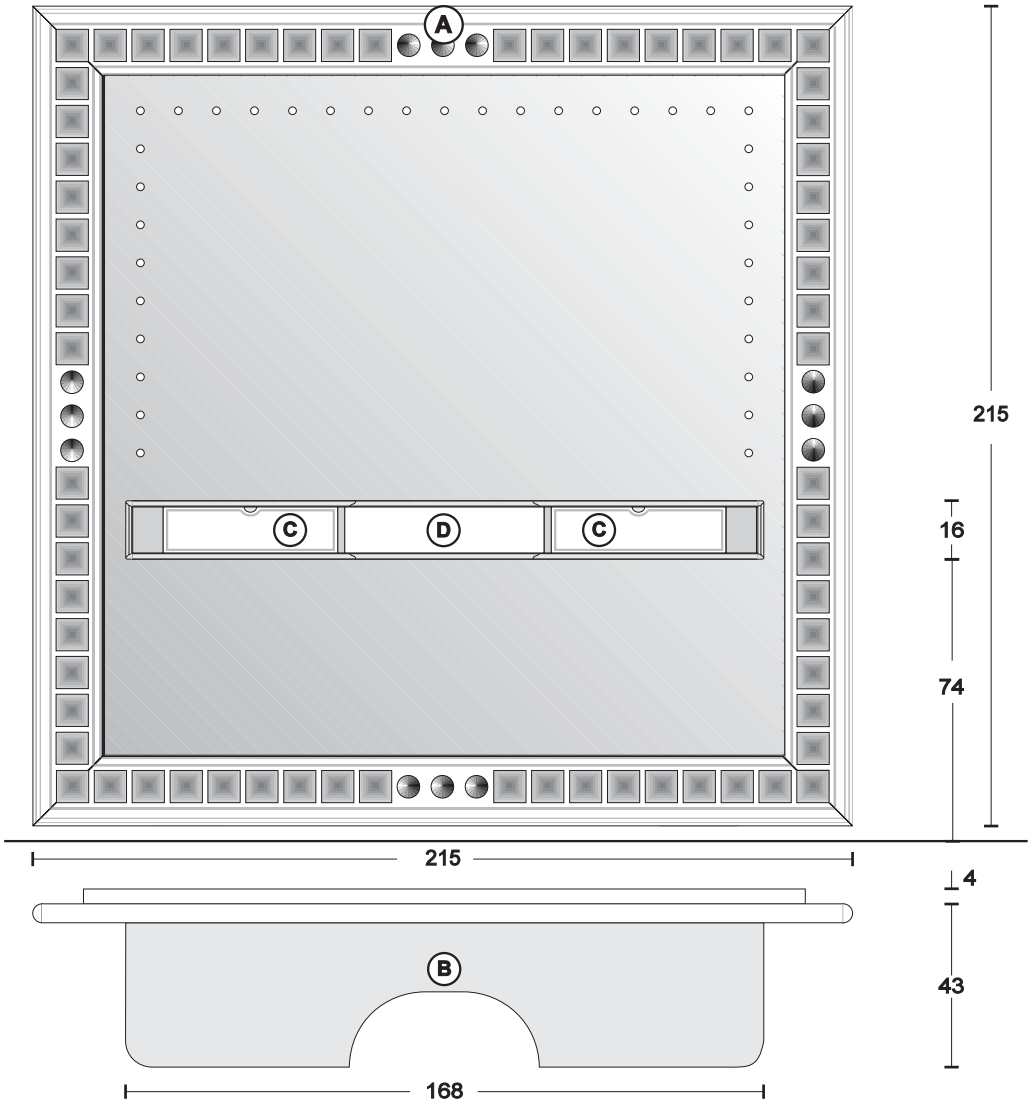

Finiture e combinazioni - Finishings and combinations

A METALBLACK con piramidi ORO FOGLIA METALBLACK with piramids GOLD FOIL	B ORO FOGLIA (gold foil)	C+D METALBLACK	€ 10.015,50
A METALBLACK con piramidi ARGENTO FOGLIA METALBLACK with piramids SILVER FOIL	B ARGENTO FOGLIA (silver foil)	C+D METALBLACK	€ 10.015,50
A BIANCO con piramidi ORO FOGLIA Opaque White with piramids GOLD FOIL	B ORO FOGLIA (gold foil)	C+D BIANCO White	€ 10.015,50
A BIANCO con piramidi ARGENTO FOGLIA Opaque White with piramids SILVER FOIL	B ARGENTO FOGLIA (silver foil)	C+D BIANCO White	€ 10.015,50
A Nero lucido con piramidi nero opaco gloss black with piramids Opaque black decorazioni argento foglia-silver foil decorations	B ARGENTO FOGLIA (silver foil)	C NERO LUCIDO (gloss black) D NERO (black)	€ 10.474,20
A Bianco lucido con piramidi bianco opaco gloss white with piramids Opaque white decorazioni argento foglia-silver foil decorations	B ARGENTO FOGLIA (silver foil)	C BIANCO LUCIDO (gloss white) D BIANCO (white)	€ 10.474,20

STAR GATE - PIRAMID

Struttura per Home Cinema - a parete (con luci retro-pannello diffuse)
Home Cinema - Wall Rack (with spreading back-panel lighting)

-Sezione
-Section

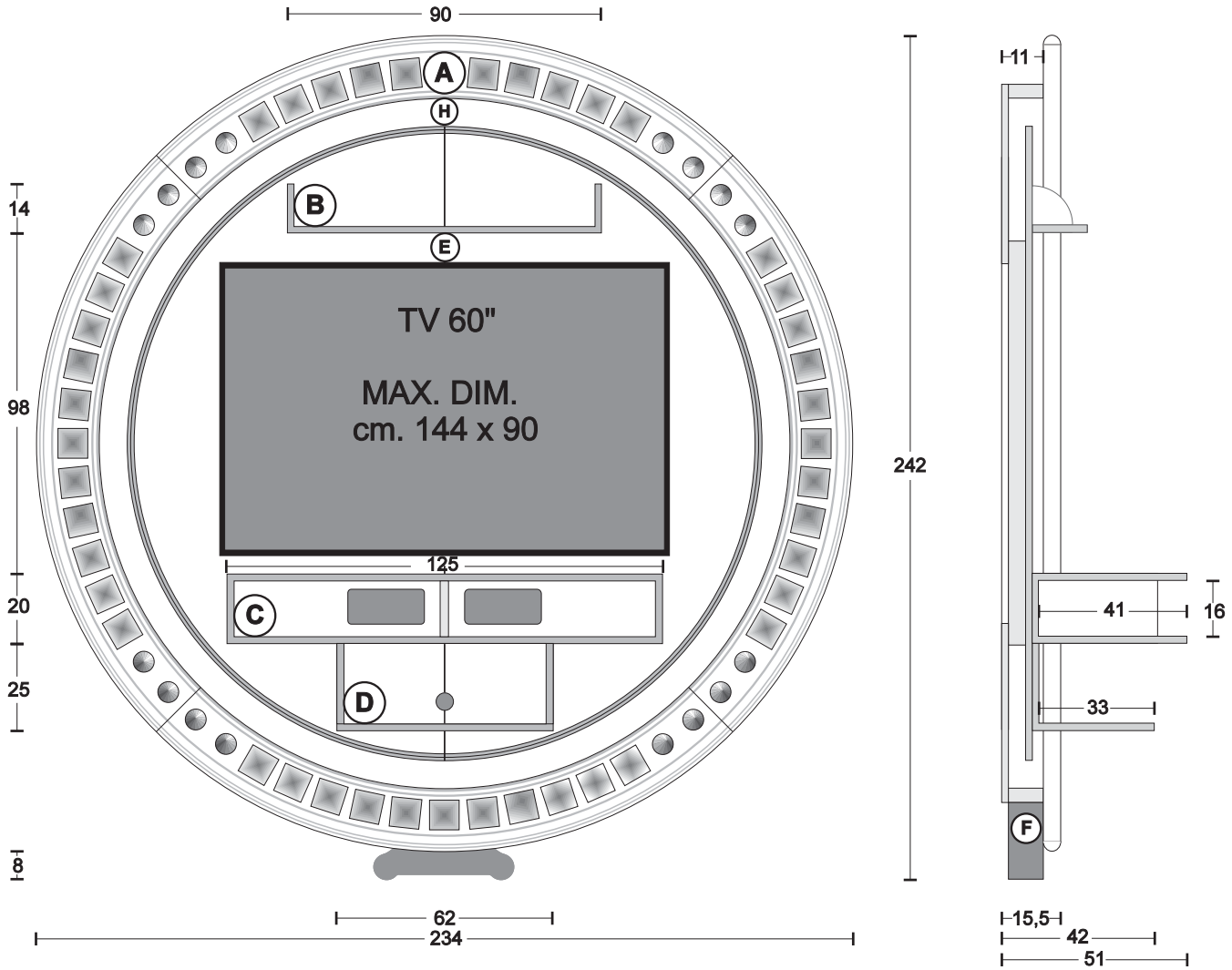

Finiture e combinazioni - Finishings and combinations

C ORO FOGLIA (gold foil) H METALGOLD	A METALBLACK con piramidi ORO FOGLIA METALBLACK with piramids GOLD FOIL	B+D+E+F	METALBLACK	€ 13.821,50
C ARGENTO FOGLIA (silver foil) H METALSILVER	A METALBLACK con piramidi ARGENTO FOGLIA METALBLACK with piramids SILVER FOIL	B+D+E+F	METALBLACK	€ 13.821,50
C+F ORO FOGLIA (gold foil) H METALGOLD	A BIANCO con piramidi ORO FOGLIA Opaque White with piramids GOLD FOIL	B+D+E	BIANCO OPACO Opaque White	€ 13.821,50
C+F Argento Foglia (silver foil) H METALSILVER	A BIANCO con piramidi ARGENTO FOGLIA Opaque White with piramids ARGENTO FOIL	B+D+E	BIANCO OPACO Opaque White	€ 13.821,50
C+A Nero lucido con piramidi nero opaco gloss black with piramids Opaque black Bianco lucido con piramidi bianco opaco gloss white with piramids Opaque white decorazioni argento foglia-silver foil decorations	B+D+E+F NERO o BIANCO (black or white)	H METALSILVER		€ 14.712,50

STAR GATE CONTAINER-BAR - PIRAMID

Mobile con scaffali a giorno e ante scorrevoli - a parete (con led bianchi sotto piani orizzontali) ① ② ③ ④
Open wall-container, with sliding doors- Horizontal shelves enlightened by white LEDs ① ② ③ ④

-Sezione
-Section

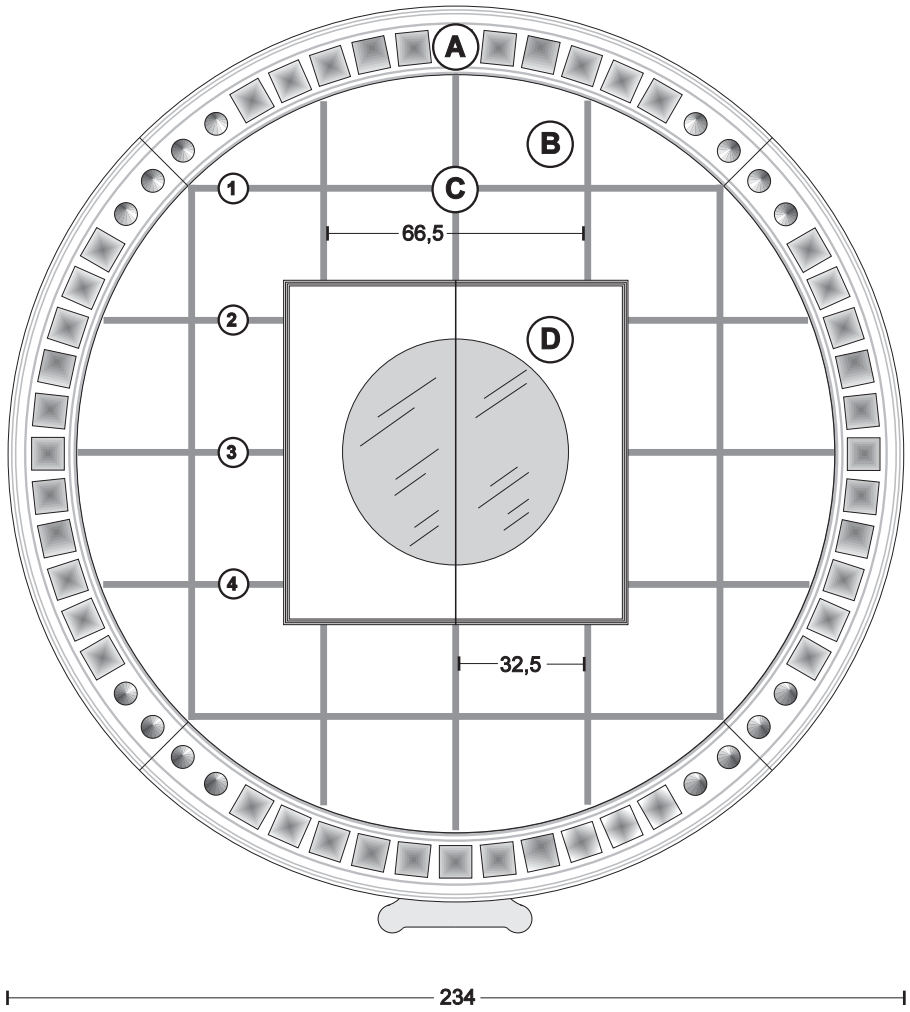

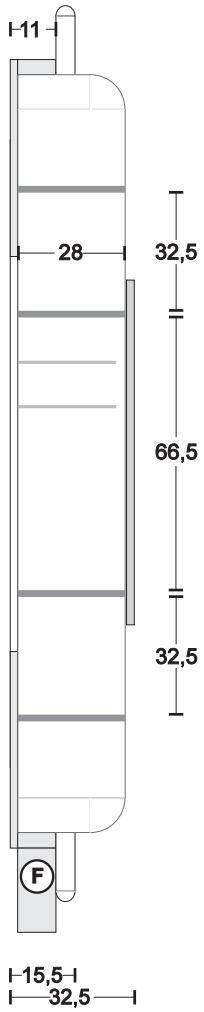

Finiture e combinazioni - Finishings and combinations

Ⓐ METALBLACK con piramidi ORO FOGLIA METALBLACK with piramids GOLD FOIL	Ⓑ ORO FOGLIA (gold foil)	Ⓒ+Ⓕ+Ⓓ	METALBLACK	€ 17.443,80
Ⓐ METALBLACK con piramidi ARGENTO FOGLIA METALBLACK with piramids SILVER FOIL	Ⓑ ARGENTO FOGLIA (silver foil)	Ⓒ+Ⓕ+Ⓓ	METALBLACK	€ 17.443,80
Ⓐ BIANCO con piramidi ORO FOGLIA Opaque White with piramids GOLD FOIL	Ⓑ ORO FOGLIA (gold foil)	Ⓒ+Ⓕ+Ⓓ	BIANCO White	€ 17.443,80
Ⓐ BIANCO con piramidi ARGENTO FOGLIA Opaque White with piramids SILVER FOIL	Ⓑ ARGENTO FOGLIA (silver foil)	Ⓒ+Ⓕ+Ⓓ	BIANCO White	€ 17.443,80
Ⓐ Nero lucido con piramidi nero opaco gloss black with piramids Opaque black decorazioni argento foglia-silver foil decorations	Ⓑ ARGENTO FOGLIA (silver foil)	Ⓒ+Ⓕ Ⓓ	NERO (black) NERO LUCIDO (gloss black)	€ 17.912,40
Ⓐ Bianco lucido con piramidi bianco opaco gloss white with piramids Opaque white decorazioni argento foglia-silver foil decorations	Ⓑ ARGENTO FOGLIA (silver foil)	Ⓒ+Ⓕ Ⓓ	BIANCO (white) BIANCO LUCIDO (gloss white)	€ 17.912,40

STAR GATE "BIG MIRROR" - PIRAMID

Specchio a parete completo di consolle a 2 cassetti e vano a giorno - led bianchi perimetrali - bolle perimetrali su specchio
Wall-mirror with 2-drawer-consolle and open compartment- white leds on perimeter- bubbles on mirror border

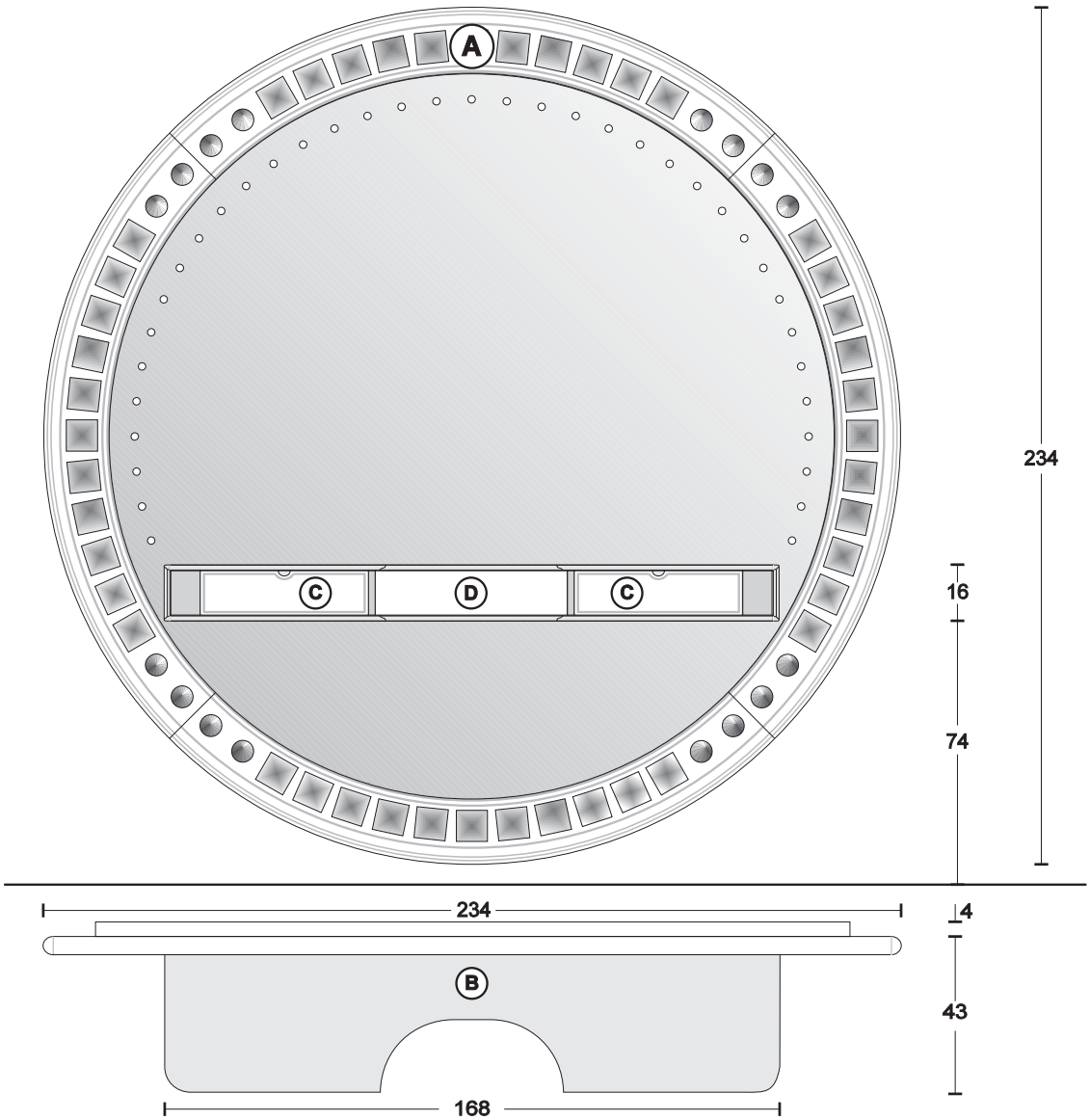

Finiture e combinazioni - Finishings and combinations

A METALBLACK con piramidi ORO FOGLIA METALBLACK with piramids GOLD FOIL	B ORO FOGLIA (gold foil)	C+D METALBLACK	€ 10.967,00
A METALBLACK con piramidi ARGENTO FOGLIA METALBLACK with piramids SILVER FOIL	B ARGENTO FOGLIA (silver foil)	C+D METALBLACK	€ 10.967,00
A BIANCO con piramidi ORO FOGLIA Opaque White with piramids GOLD FOIL	B ORO FOGLIA (gold foil)	C+D BIANCO White	€ 10.967,00
A BIANCO con piramidi ARGENTO FOGLIA Opaque White with piramids SILVER FOIL	B ARGENTO FOGLIA (silver foil)	C+D BIANCO White	€ 10.967,00
A Nero lucido con piramidi nero opaco gloss black with piramids Opaque black decorazioni argento foglia-silver foil decorations	B ARGENTO FOGLIA (silver foil)	C NERO LUCIDO (gloss black) D NERO (black)	€ 11.546,70
A Bianco lucido con piramidi bianco opaco gloss white with piramids Opaque white decorazioni argento foglia-silver foil decorations	B ARGENTO FOGLIA (silver foil)	C BIANCO LUCIDO (gloss white) D BIANCO (white)	€ 11.546,70

FRAME - 214 PIRAMID- MIRROR

SPECCHIERA A PARETE-WALL MIRROR

cornice - frame : METALBLACK **€ 4.627,70**
Piramid: oro/argento foglia-gold/silver foil

cornice - frame: Bianco-White-Weiss **€ 4.627,70**
Piramid: oro/argento foglia-gold/silver foil

cornice - frame: Bianco/Nero Lucido **€ 5.243,70**
Gloss White/Black
Piramid: Bianco/Nero Opaco-Opaque White/Black
decorazioni argento foglia-silver foil decorations

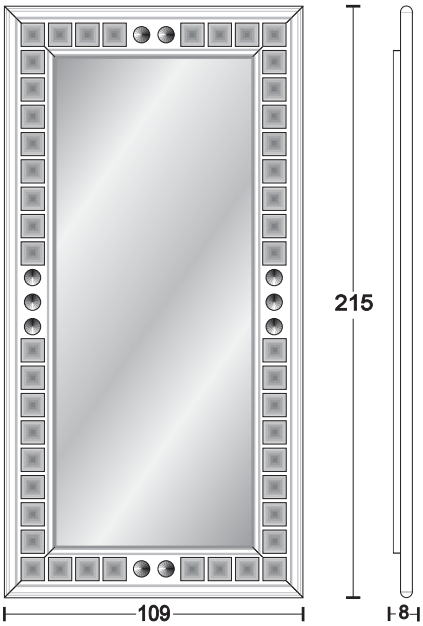

FRAME - 214 PIRAMID - SOLO FRAME

SOLO CORNICE-JUST FRAME

cornice - frame: METALBLACK **€ 4.290,00**
Piramid: oro/argento foglia-gold/silver foil

cornice - frame: Bianco-White **€ 4.290,00**
Piramid: oro/argento foglia-gold/silver foil

cornice - frame: Bianco/Nero Lucido **€ 4.908,20**
Gloss White/Black
Piramid: Bianco/Nero Opaco-Opaque White/Black
decorazioni argento foglia-silver foil decorations

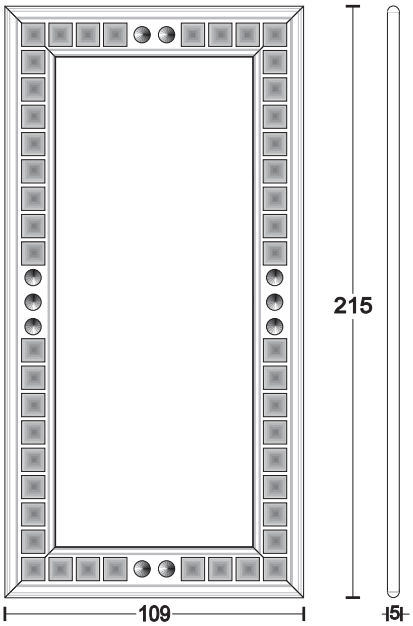

BODY ROUND LIGHT-PIRAMID

Corpo illuminante a parete - Wall Body light

cornice - frame: METALBLACK **€ 4.479,20**
Piramid: oro/argento foglia-gold/silver foil

cornice - frame: Bianco-White **€ 4.479,20**
Piramid: oro/argento foglia-gold/silver foil

cornice - frame: Bianco/Nero Lucido **€ 4.699,20**
Gloss White/Black
Piramid: Bianco/Nero Opaco-Opaque White/Black
decorazioni argento foglia-silver foil decorations

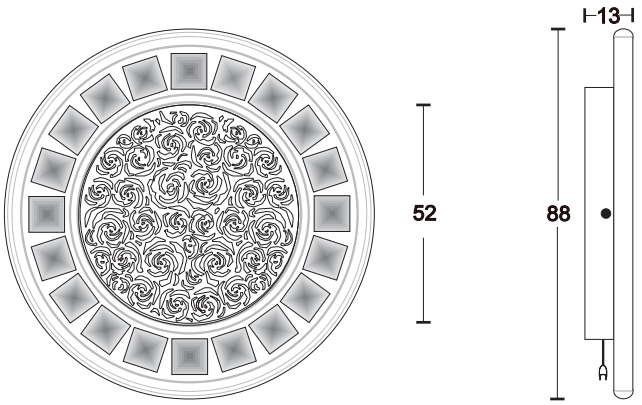

Pannello frontale traforato color Nero-Bianco con tamponatura oro/argento foglia.Completo di interruttore e spina elettrica (220 Volts)
Frontal board in black-White colour with gold or silver foil shadings provided with switch and plug (220 volts)

BODY ROUND MIRROR-PIRAMID

Specchiera a parete-Wall Mirror

cornice - frame: METALBLACK **€ 3.350,60**
Piramid: oro/argento foglia-gold/silver foil

cornice - frame: Bianco-White **€ 3.350,60**
Piramid: oro/argento foglia-gold/silver foil

cornice - frame: Bianco/Nero Lucido **€ 3.583,80**
Gloss White/Black
Piramid: Bianco/Nero Opaco-Opaque White/Black
decorazioni argento foglia-silver foil decorations

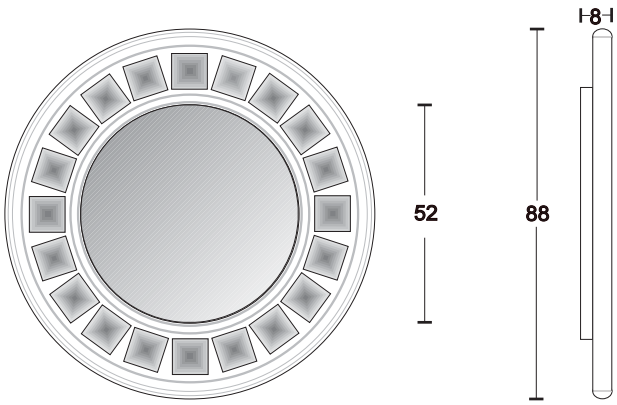

FRAME - 120 PIRAMID

Elemento porta CD-DVD a parete
Wall CD-DVD rack

cornice - frame: METALBLACK
con piramidi ORO/ARGENTO FOGLIA
with Piramid GOLD/SILVERFOIL
(interno-inside:METALBLACK) **€ 3.605,80**

cornice - frame: BIANCO (WHITE)
con piramidi ORO/ARGENTO FOGLIA
with Piramid GOLD/SILVER FOIL
(interno-inside:BIANCO (WHITE) **€ 3.605,80**

cornice - frame:BIANCO/NERO LUCIDO
Gloss White/Black
con piramidi BIANCO/NERO OPACO
with Piramid Opaque White/Black
decorazioni argento foglia-silver foil decorations
(interno-inside:BIANCO - WHITE/NERO - BLACK **€ 4.004,00**

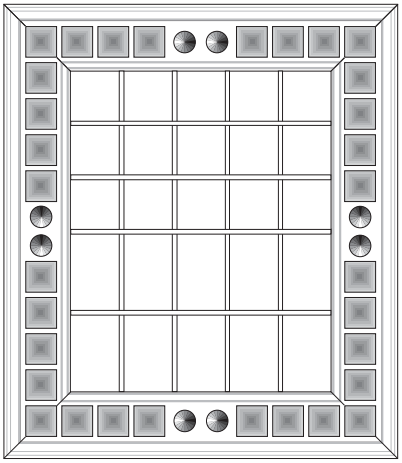

art.: F12-3C3V
234 CD + 90 DVD

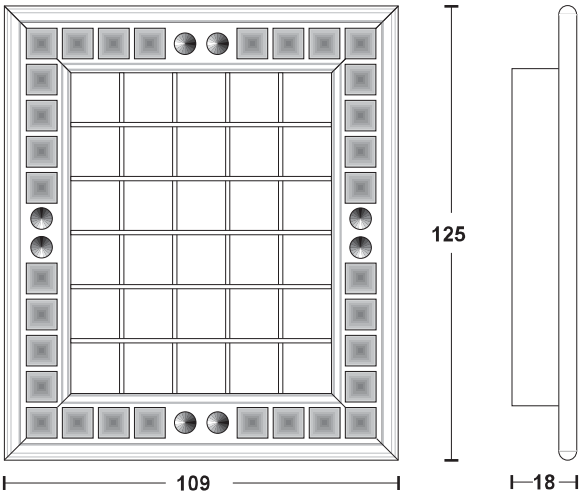

art.: F12-6C
390 CD

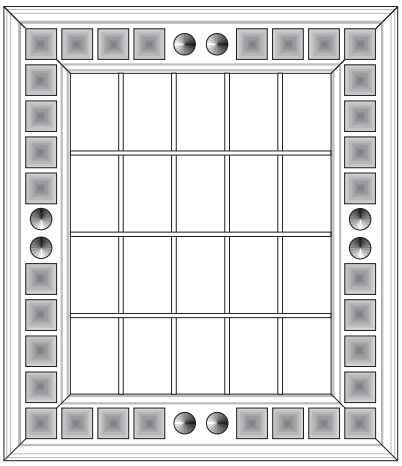

art.:.F12-4V
180 DVD

FRAME 120 PIRAMID-MIRROR

Specchiera a parete - Wall Mirror

cornice - frame:METALBLACK
con piramidi Oro Foglia o Argento Foglia
with Piramid Gold Foil or Silver Foil **€ 3.248,30**

cornice - frame:BIANCO+oro/argento foglia
(White+gold/silver foil)
con piramidi Oro Foglia o Argento Foglia
with Piramid Gold Foil or Silver Foil **€ 3.248,30**

cornice - frame:BIANCO/NERO LUCIDO
Gloss White/Black
con piramidi BIANCO/NERO OPACO
with Piramid Opaque White/Black
decorazioni argento foglia-silver foil decorations **€ 3.613,50**

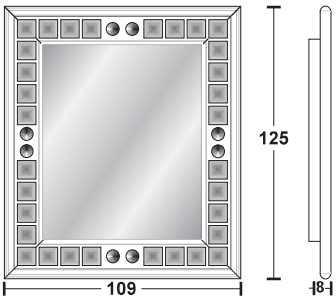

FRAME 120 PIRAMID - SOLO FRAME

Solo cornice - Just Frame

cornice - frame:METALBLACK
con piramidi Oro Foglia o Argento Foglia
with Piramid Gold Foil or Silver Foil **€ 2.957,90**

cornice - frame:BIANCO+oro/argento foglia
(White+gold/silver foil)
con piramidi Oro Foglia o Argento Foglia
with Piramid Gold Foil or Silver Foil **€ 2.957,90**

cornice - frame:BIANCO/NERO LUCIDO
Gloss White/Black
con piramidi BIANCO/NERO OPACO
with Piramid Opaque White/Black
decorazioni argento foglia-silver foil decorations **€ 3.334,10**

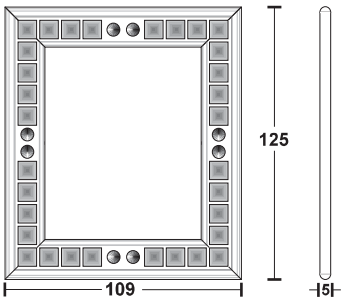

FRAME - 214 PIRAMID

Elemento porta CD-DVD a parete
Wall CD-DVD rack

cornice - frame:METALBLACK **€ 5.277,80**
con piramidi ORO FOGLIA
with Piramid GOLD FOIL
(interno-inside:METALBLACK)

cornice - frame:METALBLACK **€ 5.277,80**
con piramidi ARGENTO FOGLIA
with Piramid SILVER FOIL
(interno-inside:METALBLACK)

cornice - frame:BIANCO (WHITE) **€ 5.277,80**
con piramidi ORO/ARGENTO FOGLIA
with Piramid GOLD/SILVER FOIL
(interno-inside:BIANCO - WHITE)

cornice - frame:Bianco/Nero Lucido **€ 5.900,40**
Gloss White/Black
con piramidi Bianco/Nero opaco
with Piramid Opaque White/Black
decorazioni argento foglia-silver foil decorations
(interno-inside-innenseite BIANCO - WHITE/NERO - BLACK

art. F214-12C
780 CD

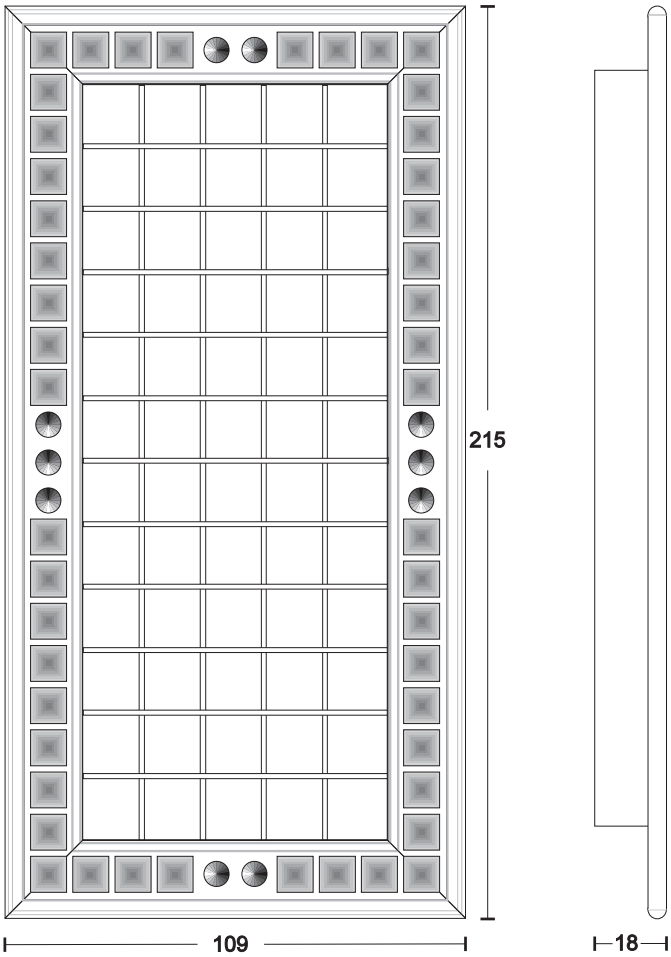

art. F214-9C2V
585 CD+90 DVD

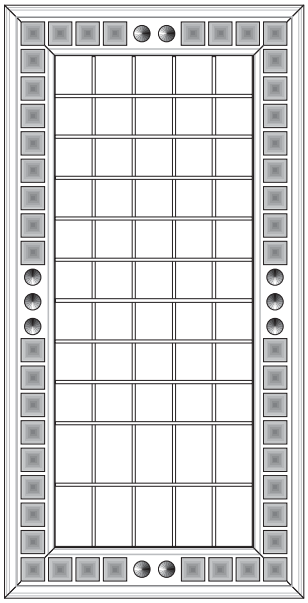

art. F214-6C4V
390 CD+180 DVD

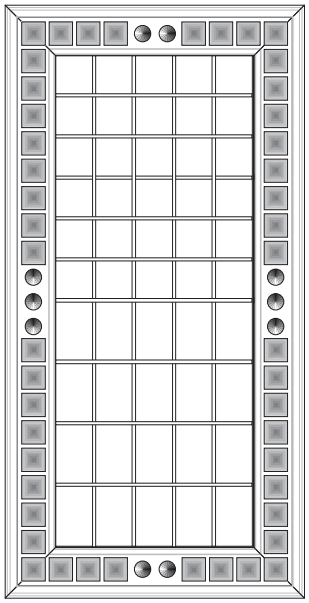

art. F214-3C6V
234 CD+270 DVD

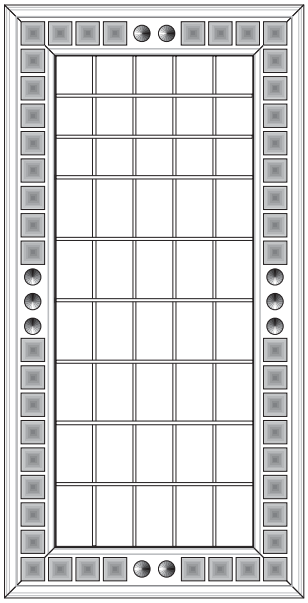

art. F214-8V
360 DVD

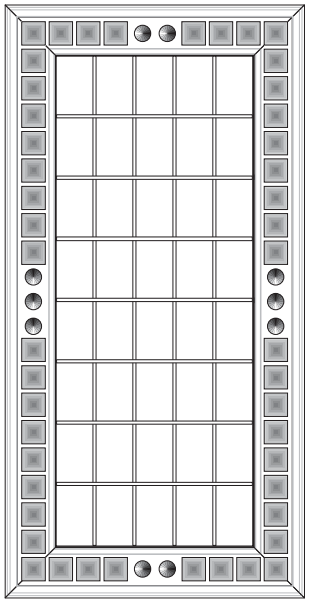

BODY LIGHT - PIRAMID

Corpo illuminante a parete
Wall Body-light

Completo di interruttore e spina elettrica (220 V.)
provided with switch and plug (220 volts)

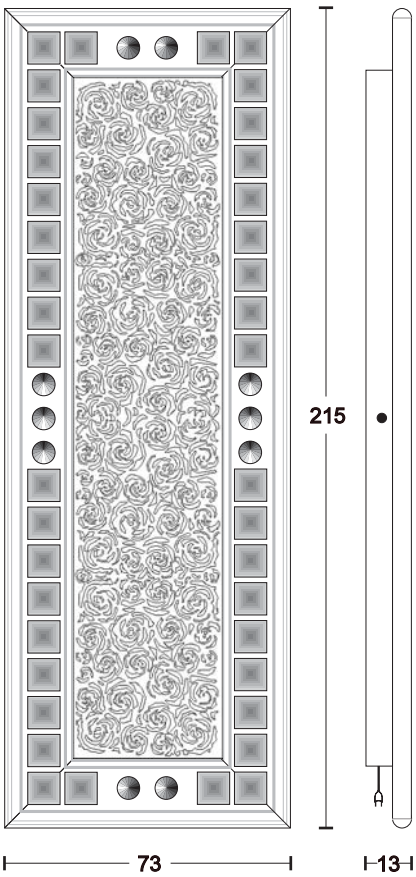

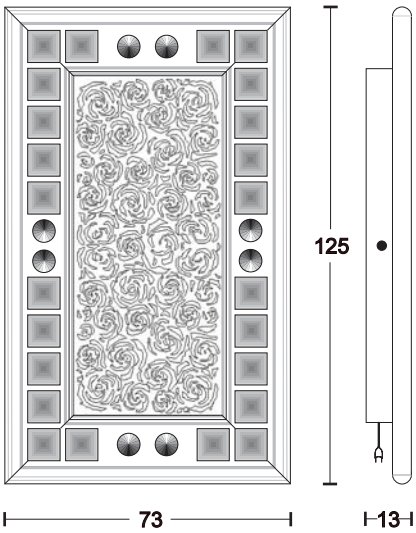

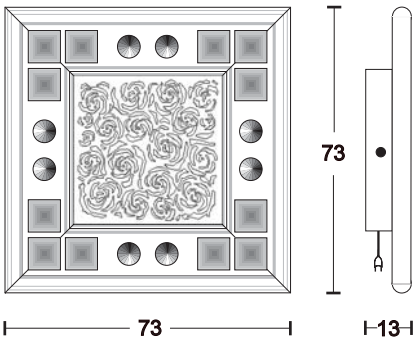

BODY-LIGHT 214- PIRAMID

cornice-frame: **€ 6.120,40**
Metalblack - Bianco-White
con piramidi ORO FOGLIA
with Piramid GOLD FOIL

cornice-frame: **€ 6.120,40**
Metalblack - Bianco-White
con piramidi ARGENTO FOGLIA
with Piramid SILVER FOIL

BIANCO/NERO LUCIDO **€ 6.626,40**
Gloss White/Black
con piramidi BIANCO/NERO OPACO
with Piramid Opaque White/Black
(decorazioni argento foglia)
(silver foil decorations)

Pannello frontale traforato color Nero o Bianco
con tamponatura oro o argento foglia.
Frontal board in black or White colour
with gold or silver foil shadings

BODY-LIGHT 120- PIRAMID

cornice-frame: **€ 4.336,20**
Metalblack - Bianco-White
con piramidi ORO FOGLIA
with Piramid GOLD FOIL

cornice-frame: **€ 4.336,20**
Metalblack - Bianco-White
con piramidi ARGENTO FOGLIA
with Piramid SILVER FOIL

BIANCO/NERO LUCIDO **€ 4.699,20**
Gloss White/Black
con piramidi BIANCO/NERO OPACO
with Piramid Opaque White/Black
(decorazioni argento foglia)
(silver foil decorations)

Pannello frontale traforato color Nero o Bianco
con tamponatura oro o argento foglia.
Frontal board in black or White colour
with gold or silver foil shadings

BODY-LIGHT 80- PIRAMID

cornice-frame: **€ 2.740,10**
Metalblack - Bianco-White
con piramidi ORO FOGLIA
with Piramid GOLD FOIL

cornice-frame: **€ 2.740,10**
Metalblack - Bianco-White
con piramidi ARGENTO FOGLIA
with Piramid SILVER FOIL

BIANCO/NERO LUCIDO **€ 2.922,70**
Gloss White/Black
con piramidi BIANCO/NERO OPACO
with Piramid Opaque White/Black
(decorazioni argento foglia)
(silver foil decorations)

Pannello frontale traforato color Nero o Bianco
con tamponatura oro o argento foglia.
Frontal board in black or White colour
with gold or silver foil shadings

BODY MIRROR - PIRAMID

SPECCHIERA A PARETE
WALL MIRROR

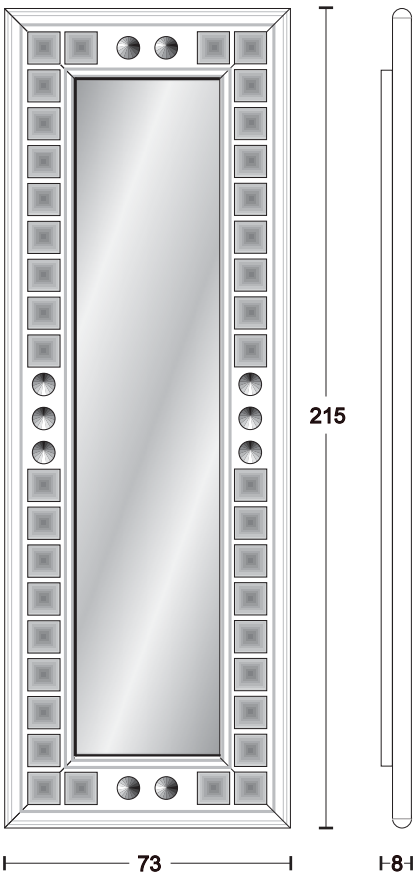

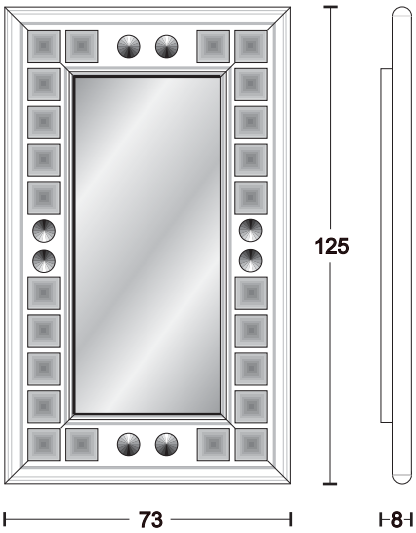

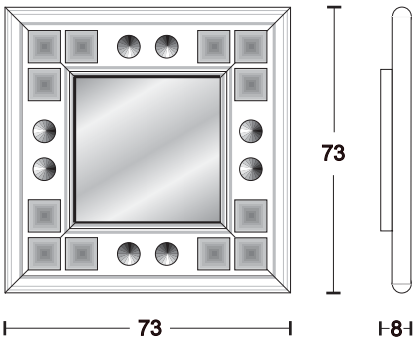

BODY MIRROR 214- PIRAMID

Specchiera a parete-Wall Mirror

cornice-frame: **€ 4.510,00**
Metalblack - Bianco-White
con piramidi ORO FOGLIA
with Piramid GOLD FOIL

cornice-frame: **€ 4.510,00**
Metalblack - Bianco-White
con piramidi ARGENTO FOGLIA
with Piramid SILVER FOIL

BIANCO/NERO LUCIDO **€ 5.063,30**
Gloss White/Black
con piramidi BIANCO/NERO OPACO
with Piramid Opaque White/Black
(decorazioni argento foglia)
(silver foil decorations)

BODY MIRROR 120- PIRAMID

Specchiera a parete-Wall Mirror

cornice-frame: **€ 3.236,20**
Metalblack - Bianco-White
con piramidi ORO FOGLIA
with Piramid GOLD FOIL

cornice-frame: **€ 3.236,20**
Metalblack - Bianco-White
con piramidi ARGENTO FOGLIA
with Piramid SILVER FOIL

BIANCO/NERO LUCIDO **€ 3.612,40**
Gloss White/Black
con piramidi BIANCO/NERO OPACO
with Piramid Opaque White/Black
(decorazioni argento foglia)
(silver foil decorations)

BODY MIRROR 80- PIRAMID

Specchiera a parete-Wall Mirror

cornice-frame: **€ 2.385,90**
Metalblack - Bianco-White
con piramidi ORO FOGLIA
with Piramid GOLD FOIL

cornice-frame: **€ 2.385,90**
Metalblack - Bianco-White
con piramidi ARGENTO FOGLIA
with Piramid SILVER FOIL

BIANCO/NERO LUCIDO **€ 2.580,60**
Gloss White/Black
con piramidi BIANCO/NERO OPACO
with Piramid Opaque White/Black
(decorazioni argento foglia)
(silver foil decorations)

SHINING SUN - PIRAMID

Corpo illuminante a parete - Wall Body light

cornice - frame: **€ 5.787,10**
METALBLACK - BIANCO-WHITE
Piramidi: ORO FOGLIA/ARGENTO FOGLIA
Piramid: GOLD FOIL/SILVER FOIL

BIANCO/NERO LUCIDO **€ 6.344,80**
Gloss White/Black
con piramidi BIANCO/NERO OPACO
with Piramid Opaque White/Black
decorazioni argento foglia-silver foil decorations

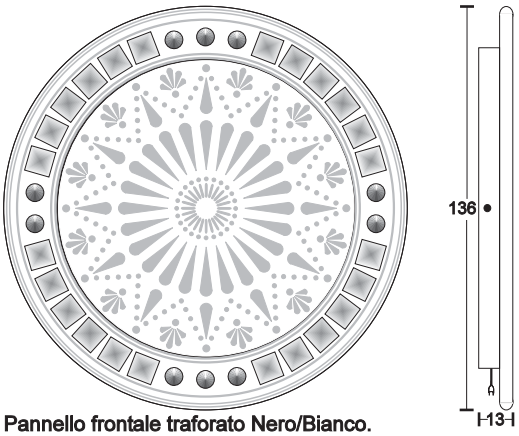

Pannello frontale traforato Nero/Bianco.
Completo di interruttore e spina (220 Volts)
Frontal board in Black/White provided with switch and plug (220 volts)

SHINING SUN - PIRAMID-mirror

Specchiera a parete - Wall Mirror

cornice - frame - Rahmen: **€ 4.030,40**
METALBLACK - BIANCO-WHITE
Piramidi: ORO FOGLIA/ARGENTO FOGLIA
Piramid: GOLD FOIL/SILVER FOIL

BIANCO/NERO LUCIDO **€ 4.573,80**
Gloss White/Black
con piramidi BIANCO/NERO OPACO
with Piramid Opaque White/Black

decorazioni argento foglia-silver foil decorations

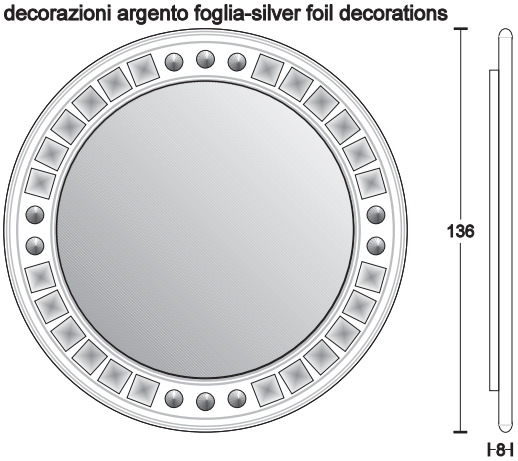

SITTING CASE - PIRAMID

Cassapanca - Sitting case

Struttura METALBLACK/BIANCO. Pannelli frontali traforati colore Nero/Bianco con bassofondo Oro/Argento foglia. Piano chiusura METALBLACK/BIANCO con bassorilievo Oro/argento foglia, completo di ammortizzatori. **€ 6.869,50**
Structure METALBLACK/WHITE. Black/White frontal panel with GOLD/SILVER foil background. Opening top METALBLACK/WHITE with GOLD/SILVER foil bas-relief, with Shock absorber
piramidi-Piramid Oro/Argento foglia-Gold/Silver foil

Struttura-Structure: Bianco/Nero Lucido-gloss White/Black **€ 7.286,40**
Pannelli traforati-Frontal panel: Bianco/Nero-white/black
Piano chiusura-opening top:Bianco/nero-white/black
Completo di ammortizzatori-with Shock absorber
Bassorilievo e decori-bas-relief and decoration: Argento foglia-Silver Foil
piramidi-Piramid:Bianco/Nero opaco-opaque white/Black

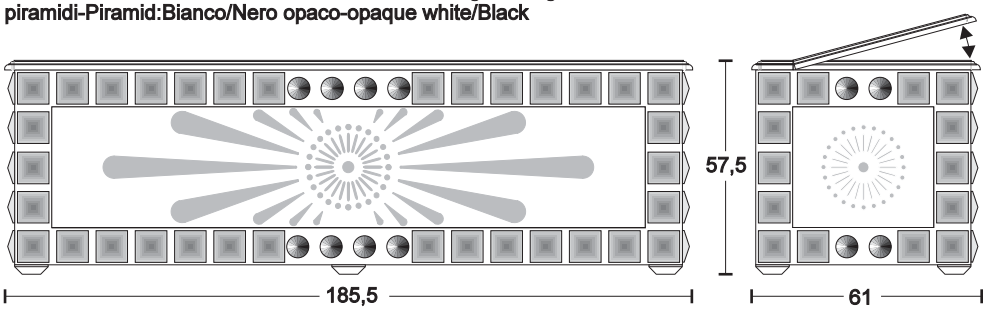

TRAYS

OPTIONAL:
Coppia vassoi scorrevoli - METALTITANIO
Couple of sliding trays - METALTITANIO

€ 663,30

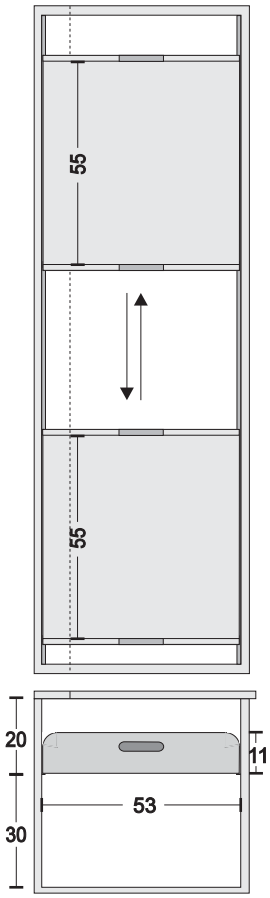

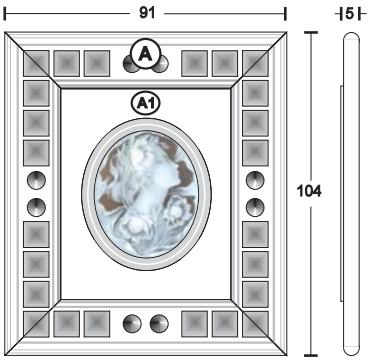

CAMMEO

Ovale con Cammeo (Sinistro o destro)
Oval with Cameo (Left or Right)

(A) Metalblack/bianco Piramid Oro/Argento-Metalblack/White-Piramid Gold/Silver foil
Metalblack/Weiss-Pyramiden Gold/Silber Folie
(A1) tutti i laccati opachi-all opaque laquering **€ 3.333,00**

(A) Nero/Bianco Lucido-Piramid bianco/nero opaco
Gloss Black/White-Piramid opaque Black/White
(A1) tutti i laccati opachi-all opaque laquering **€ 3.533,20**

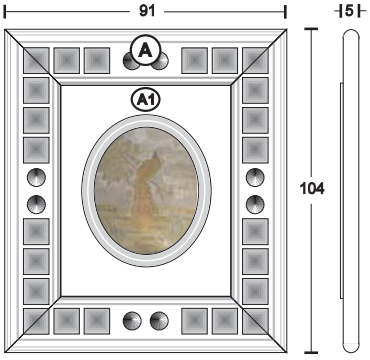

PAVONE

Ovale con Pavone Artistico oro 23/22/20/18/16/12 Carati (Sinistro o destro)
Oval with Artistic peacock Gold 23/22/20/18/16/12 carats (Left or Right)

(A) Metalblack/bianco Piramid Oro/Argento
Metalblack/White-Piramid Gold/Silver foil
(A1) tutti i laccati opachi-all opaque laquering **€ 5.768,40**

(A) Nero/Bianco Lucido-Piramid bianco/nero opaco
Gloss Black/White-Piramid opaque Black/White
(A1) tutti i laccati opachi-all opaque laquering **€ 5.970,80**

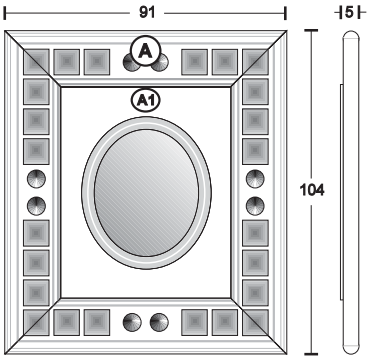

OVAL MIRROR

Ovale con specchio bisellato
Oval with bevelled mirror

(A) Metalblack/bianco Piramid Oro/Argento
Metalblack/White-Piramid Gold/Silver foil
(A1) tutti i laccati opachi-all opaque laquering **€ 3.121,80**

(A) Nero/Bianco Lucido-Piramid bianco/nero opaco
Gloss Black/White-Piramid opaque Black/White
(A1) tutti i laccati opachi-all opaque laquering **€ 3.320,90**

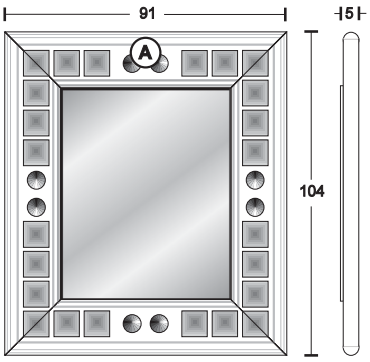

MIRROR

Specchio anticato o normale
Antique mirror or standard

(A) Metalblack/bianco Piramid Oro/Argento
Metalblack/White-Piramid Gold/Silver foil **€ 3.147,10**

(A) Nero/Bianco Lucido-Piramid bianco/nero opaco
Gloss Black/White-Piramid opaque Black/White **€ 3.347,30**

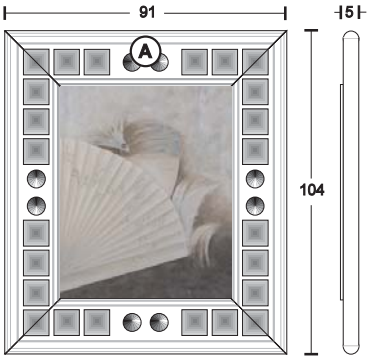

THE FAN

Dipinto materico "Donna con Ventaglio" (Sinistro o destro)
Hand-made Materic painting "Donna con Ventaglio" (Left or Right)

(A) Tutti i laccati opachi-Decorazioni Oro/Argento
all opaque laquering-decoration gold/silver foil **€ 3.440,80**

(A) Nero/Bianco Lucido-Decori Oro/ argento
Gloss Black/White-Gold/Silver Foil Decorations **€ 3.641,00**

CIAIKA -170 PIRAMID

Tavolino porta CD/DVD per 800 Cd (e/o 378 DVD)
Coffee table CD/DVD rack for 800 CD (and or 378 DVD)

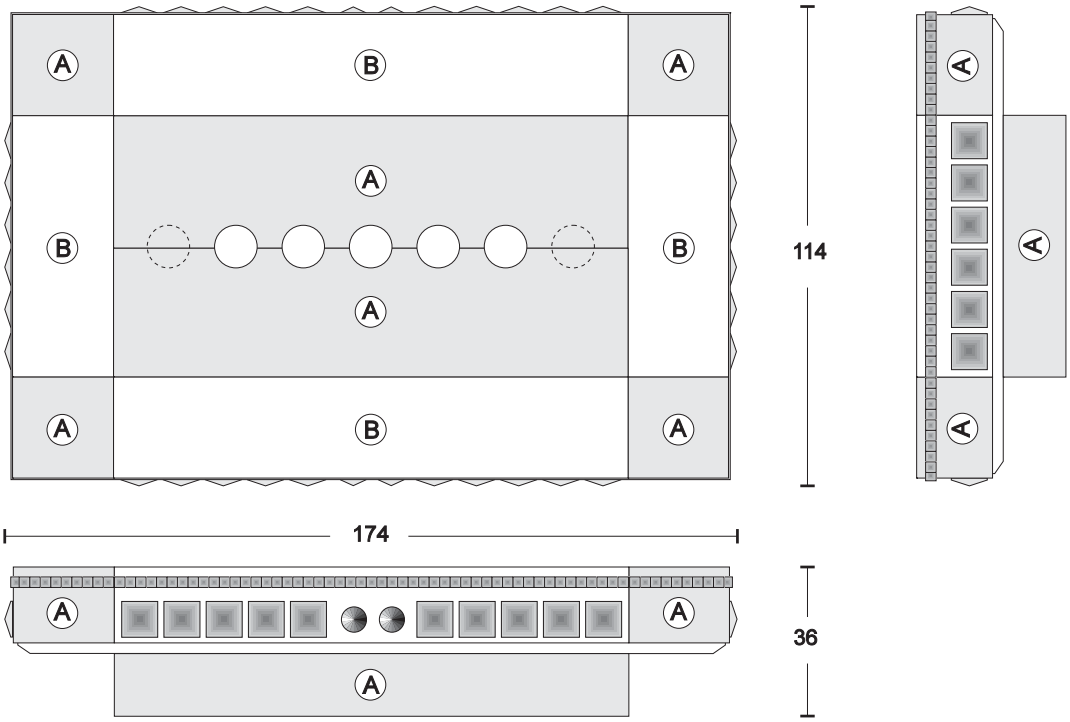

Finiture esterne standard
Outside Standard finishings

(A) ORO FOGLIA (gold foil)	(B) METALBLACK Piramid (oro foglia-gold foil)	€ 6.773,80
(A) ARGENTO FOGLIA (silver foil)	(B) METALBLACK Piramid (arg. foglia-silver foil)	€ 6.773,80
(A) ORO FOGLIA (gold foil)	(B) BIANCO(White) Piramid (oro foglia-gold foil)	€ 6.773,80
(A) ARGENTO FOGLIA (silver foil)	(B) BIANCO(White) Piramid (arg. foglia-silver foil)	€ 6.773,80
(A) ARGENTO FOGLIA (silver foil)	(B) BIANCO LUCIDO (gloss white) Piramid (bianco-white)	€ 7.198,40
(A) ARGENTO FOGLIA (silver foil)	(B) NERO LUCIDO (gloss black) Piramid (bianco-white)	€ 7.198,40

Finitura superfici interne: METALSILVER o METALGOLD
Finishings of inside surface: METALSILVER or METALGOLD

CIAIKA -110 PIRAMID

Tavolino porta CD/DVD per 490 Cd (e/o 218 DVD)
Coffe table CD/DVD rack for 490 CD (and or 218 DVD)

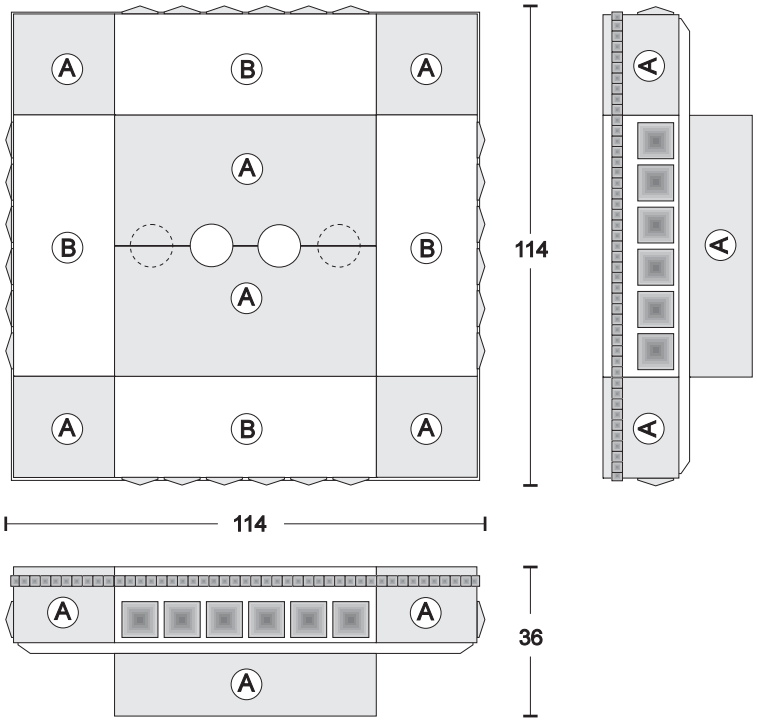

Finiture esterne standard
Outside Standard finishings

(A) ORO FOGLIA (gold foil)	(B) METALBLACK Piramid (oro foglia-gold foil)	€ 5.505,50
(A) ARGENTO FOGLIA (silver foil)	(B) METALBLACK Piramid (arg. foglia-silver foil)	€ 5.505,50
(A) ORO FOGLIA (gold foil)	(B) BIANCO(White) Piramid (oro foglia-gold foil)	€ 5.505,50
(A) ARGENTO FOGLIA (silver foil)	(B) BIANCO(White) Piramid (arg. foglia-silver foil)	€ 5.505,50
(A) ARGENTO FOGLIA (silver foil)	(B) BIANCO LUCIDO (gloss white) Piramid (bianco-white)	€ 6.171,00
(A) ARGENTO FOGLIA (silver foil)	(B) NERO LUCIDO (gloss black) Piramid (bianco-white)	€ 6.171,00

Finitura superfici interne: METALSILVER o METALGOLD
Finishings of inside surface: METALSILVER or METALGOLD

CIAIKA - 110 SLIM - PIRAMID

Tavolino porta CD/DVD per 180 Cd (e/o 92 DVD)
Coffe table CD/DVD rack for 180 CD (and or 92 DVD)

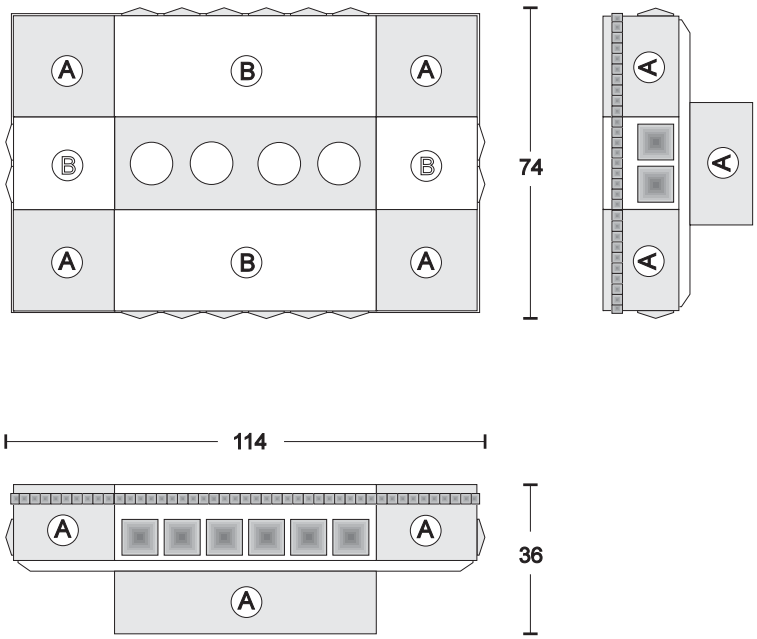

Finiture esterne standard
Outside Standard finishings

(A) ORO FOGLIA (gold foil)	(B) METALBLACK Piramid (oro foglia-gold foil)	€ 4.974,20
(A) ARGENTO FOGLIA (silver foil)	(B) METALBLACK Piramid (arg. foglia-silver foil)	€ 4.974,20
(A) ORO FOGLIA (gold foil)	(B) BIANCO(White) Piramid (oro foglia-gold foil)	€ 4.974,20
(A) ARGENTO FOGLIA (silver foil)	(B) BIANCO(White) Piramid (arg. foglia-silver foil)	€ 4.974,20
(A) ARGENTO FOGLIA (silver foil)	(B) BIANCO LUCIDO (gloss white) Piramid (bianco-white)	€ 5.506,60
(A) ARGENTO FOGLIA (silver foil)	(B) NERO LUCIDO (gloss black) Piramid (bianco-white)	€ 5.506,60

Finitura superfici interne: METALSILVER o METALGOLD
Finishings of inside surface: METALSILVER or METALGOLD

1 WINDOWS - COFFEE TABLE - PIRAMID

Tavolino contenitore con vassoi estraibili - Coffee table container removable tray

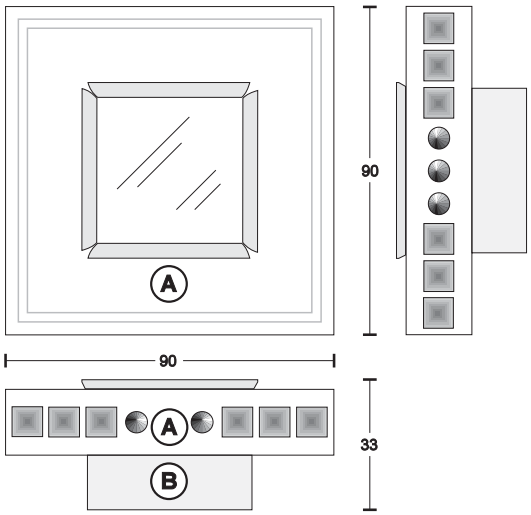

(A) Metalblack/Bianco - Piramid oro/argento foglia, decori oro/argento foglia - vassoi in vetro temperato, maniglie oro/argento foglia
Metalblack/White - Piramid Gold/Silverfoil, decoration gold/silver foil - Ardened Glass Trays, handles gold/silver foil **€ 2.964,50**

(B) Metalblack/Bianco-Metalblack/White

(A) Bianco/Nero lucido - Piramid Bianco/Nero opaco decori argento foglia - vassoi in vetro temperato, maniglie argento foglia
Gloss White/Black - piramid white/black opaque decoration silver foil - Ardened Glass Trays, handles Silverfoil **€ 3.465,00**

(B) Metalblack/Bianco-Metalblack/White

2 WINDOWS - COFFEE TABLE - PIRAMID

Tavolino contenitore con vassoi estraibili - Coffee table container removable tray

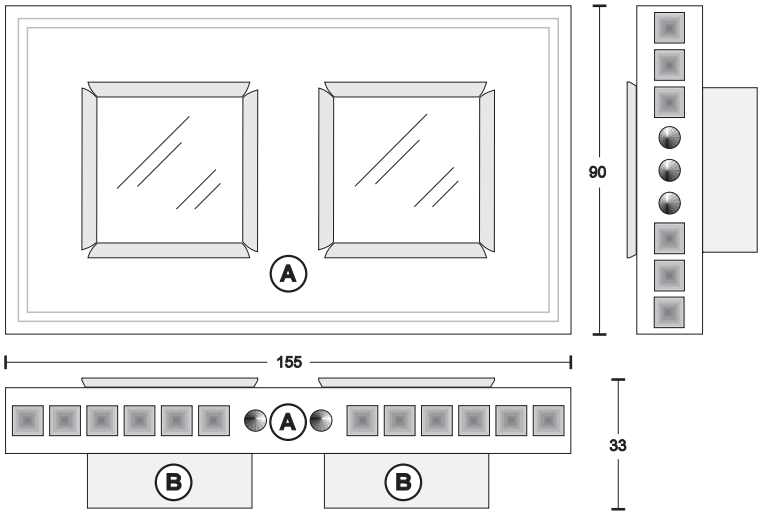

(A) Metalblack/Bianco - Piramid oro/argento foglia - decori oro/argento foglia - vassoi in vetro temperato - maniglie oro/argento foglia
Metalblack/White - Piramid Gold/Silverfoil - decoration gold/silver foil - Ardened Glass Trays - handles gold/silver foil € 4.812,50

(B) Metalblack/Bianco-Metalblack/White

(A) Bianco/Nero lucido - Piramid Bianco/Nero opaco - decori argento foglia - vassoi in vetro temperato - maniglie argento foglia
Gloss White/Black - piramid white/black opaque - decoration silver foil - Ardened Glass Trays - handles Silverfoil € 5.505,50

(D) Metalblack/Bianco-Metalblack/White

4 WINDOWS - COFFEE TABLE - PIRAMID

Tavolino contenitore con vassoi estraibili - Coffee table container removable tray

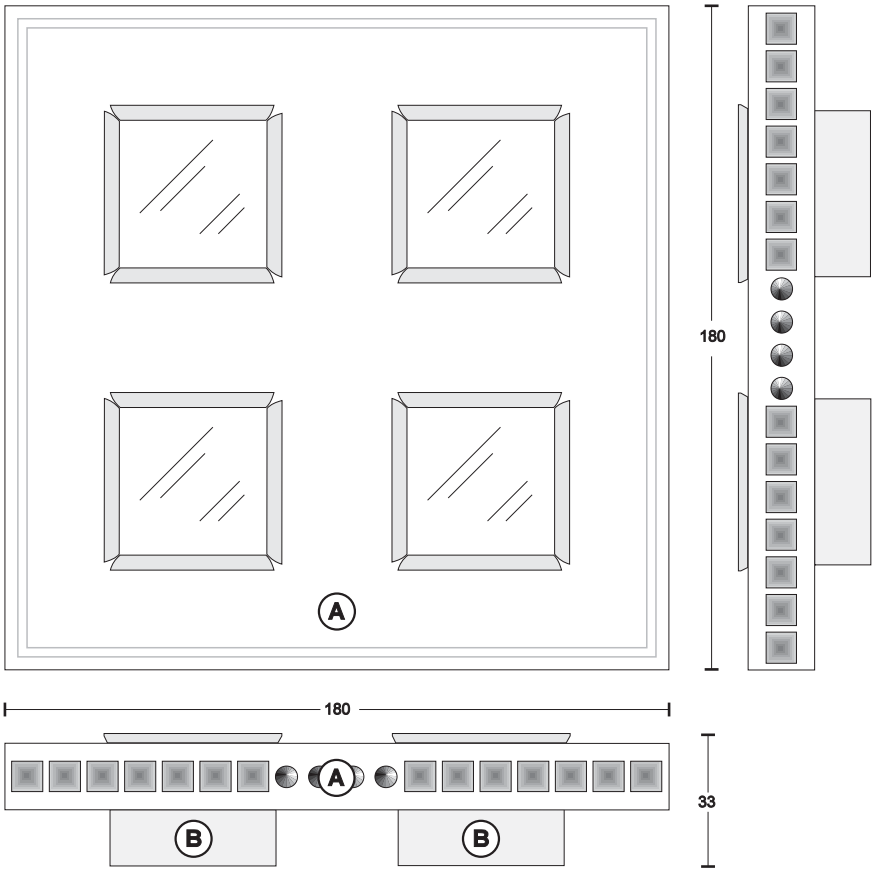

A Metalblack/Bianco - Piramid oro/argento foglia, decori oro/argento foglia-vassoi in vetro temperato - maniglie oro/argento foglia
Metalblack/White - Piramid Gold/Silverfoil, decoration gold/silver foil - Ardened Glass Trays handles gold/silver foil

B Metalblack/Bianco-Metalblack/White

€ 8.701,00

A Bianco/Nero lucido - Piramid Bianco/Nero opaco decori argento foglia - vassoi in vetro temperato maniglie argento foglia
Gloss White/Black - piramid white/black opaque decoration silver foil - Ardened Glass Trays, handles Silverfoil

B Metalblack/Bianco-Metalblack/White

€ 9.955,00

3 WINDOWS - COFFEE TABLE - PIRAMID

Tavolino contenitore con vassoi estraibili - Coffee table container removable tray

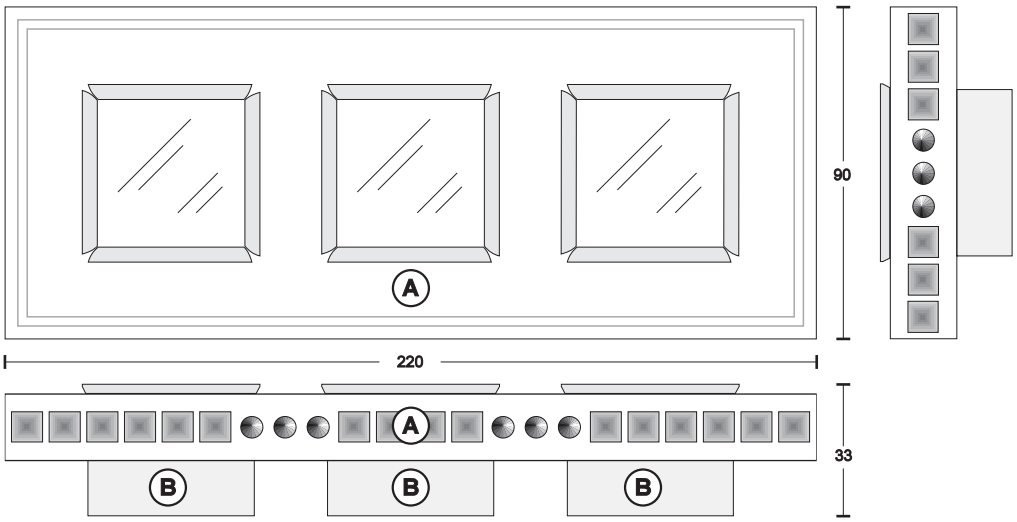

A Metalblack/Bianco - Piramid oro/argento foglia - decori oro/argento foglia - vassoi in vetro temperato - maniglie oro/argento foglia **€ 6.732,00**
Metalblack/White - Piramid Gold/Silverfoil - decoration gold/silver foil - Ardened Glass Trays - handles gold/silver foil

B Metalblack/Bianco-Metalblack/White

A Bianco/Nero lucido - Piramid Bianco/Nero opaco - decori argento foglia - vassoi in vetro temperato - maniglie argento foglia **€ 7.656,00**
Gloss White/Black - piramid white/black opaque - decoration silver foil - Ardened Glass Trays - handles Silverfoil

D Metalblack/Bianco-Metalblack/White

FLOWER 60 - PIRAMID

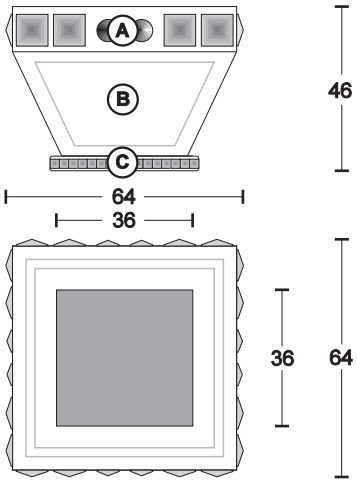

Finiture - finishings

Ⓐ Metalblack - Bianco(white) — € 2.191,20
- Piramid:oro/argento foglia (gold/silver foil)
- decorazioni-decorations
oro/argento foglia (gold/silver foil)

Ⓑ Metalblack - Bianco(white)
- decorazioni-decorations
oro/argento foglia (gold/silver foil)

Ⓒ Metalblack - Bianco(white)
- decorazioni-decorations
oro/argento foglia (gold/silver foil)

Ⓐ+Ⓒ Bianco/Nero lucido Gloss white/Black — € 2.344,10
- Piramidi-Piramid:Bianco/Nero opaco
Opaque White/Black

Ⓒ Bianco/Nero opaco-Opaque White/Black
- decorazioni-decorations
argento foglia (silver foil)

Completo di vasca metallica zincata-including galvanized metal tank

VASE 90 - PIRAMID

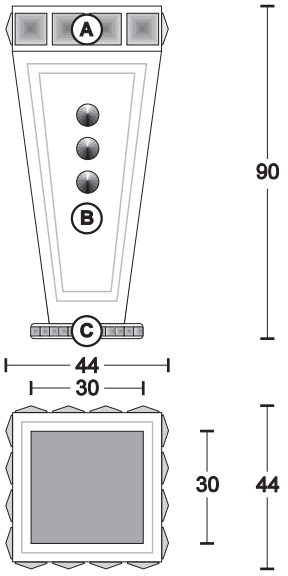

Finiture - finishings

Ⓐ Metalblack - Bianco(white) — € 2.205,50
- Piramid:oro/argento foglia (gold/silver foil)
- decorazioni-decorations
oro/argento foglia (gold/silver foil)

Ⓑ Metalblack - Bianco(white)
- decorazioni-decorations
oro/argento foglia (gold/silver foil)

Ⓒ Metalblack - Bianco(white)
- decorazioni-decorations
oro/argento foglia (gold/silver foil)

Ⓐ+Ⓒ Bianco/Nero lucido Gloss white/Black — € 2.359,50
- Piramidi-Piramid:Bianco/Nero opaco
Opaque White/Black

Ⓒ Bianco/Nero opaco-Opaque White/Black
- decorazioni-decorations
argento foglia (silver foil)

Completo di vasca metallica zincata oppure chiusura top per colonna
including galvanized metal tank or top as column

VASE 125 - PIRAMID

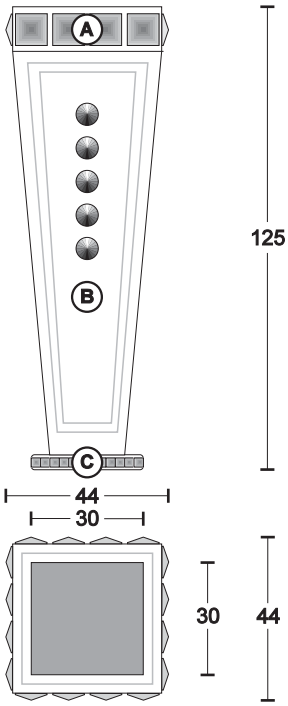

Finiture - finishings

Ⓐ Metalblack - Bianco(white) — € 2.497,00
- Piramid:oro/argento foglia (gold/silver foil)
- decorazioni-decorations
oro/argento foglia (gold/silver foil)

Ⓑ Metalblack - Bianco(white)
- decorazioni-decorations
oro/argento foglia (gold/silver foil)

Ⓒ Metalblack - Bianco(white)
- decorazioni-decorations
oro/argento foglia (gold/silver foil)

Ⓐ+Ⓒ Bianco/Nero lucido Gloss white/Black — € 2.651,00
- Piramidi-Piramid:Bianco/Nero opaco
Opaque White/Black

Ⓒ Bianco/Nero opaco-Opaque White/Black
- decorazioni-decorations
argento foglia (silver foil)

Completo di vasca metallica zincata oppure chiusura top per colonna
including galvanized metal tank or top as column

FLOWER 60 - BRAZIER - PIRAMID

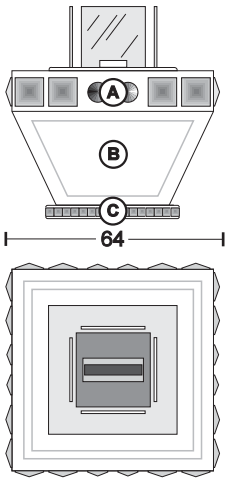

Finiture - finishings

Ⓐ Metalblack - Bianco(white) — € 3.732,30
- Piramid:oro/argento foglia (gold/silver foil)
- decorazioni-decorations
oro/argento foglia (gold/silver foil)

Ⓑ Metalblack - Bianco(white)
- decorazioni-decorations
oro/argento foglia (gold/silver foil)

Ⓒ Metalblack - Bianco(white)
- decorazioni-decorations
oro/argento foglia (gold/silver foil)

Ⓐ+Ⓒ Bianco/Nero lucido Gloss white/Black — € 3.876,40
- Piramidi-Piramid:Bianco/Nero opaco
Opaque White/Black

Ⓒ Bianco/Nero opaco-Opaque White/Black
- decorazioni-decorations
argento foglia (silver foil)

Con braciere a bio-alcol removibile-completo di vetri temperati
Complete of bio-alcohol removable brazier-complete of tempered glass

VASE 90 - BRAZIER - PIRAMID

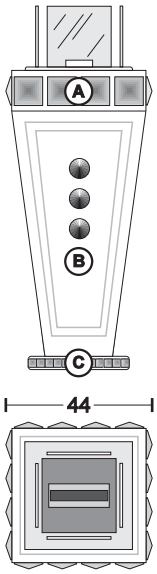

Finiture - finishings - Ausführungen

Ⓐ Metalblack - Bianco(white) — € 3.744,40
- Piramid:oro/argento foglia (gold/silver foil)
- decorazioni-decorations
oro/argento foglia (gold/silver foil)

Ⓑ Metalblack - Bianco(white)
- decorazioni-decorations
oro/argento foglia (gold/silver foil)

Ⓒ Metalblack - Bianco(white)
- decorazioni-decorations
oro/argento foglia (gold/silver foil)

Ⓐ+Ⓒ Bianco/Nero lucido Gloss white/Black — € 3.890,70
- Piramidi-Piramid:Bianco/Nero opaco
Opaque White/Black

Ⓒ Bianco/Nero opaco-Opaque White/Black
- decorazioni-decorations
argento foglia (silver foil)

Con braciere a bio-alcol removibile-completo di vetri temperati
Complete of bio-alcohol removable brazier-complete of tempered glass

VASE 125 - BRAZIER - PIRAMID

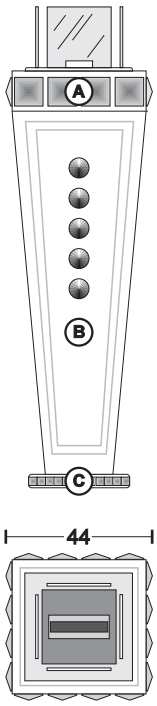

Finiture - finishings

Ⓐ Metalblack - Bianco(white) — € 4.022,70
- Piramid:oro/argento foglia (gold/silver foil)
- decorazioni-decorations
oro/argento foglia (gold/silver foil)

Ⓑ Metalblack - Bianco(white)
- decorazioni-decorations
oro/argento foglia (gold/silver foil)

Ⓒ Metalblack - Bianco(white)
- decorazioni-decorations
oro/argento foglia (gold/silver foil)

Ⓐ+Ⓒ Bianco/Nero lucido Gloss white/Black — € 4.169,00
- Piramidi-Piramid:Bianco/Nero opaco
Opaque White/Black

Ⓒ Bianco/Nero opaco-Opaque White/Black
- decorazioni-decorations
argento foglia (silver foil)

Con braciere a bio-alcol removibile-completo di vetri temperati
Complete of bio-alcohol removable brazier-complete of tempered glass

CHEST-NOUVEAU-282 PIRAMID DIVANO - SOFA

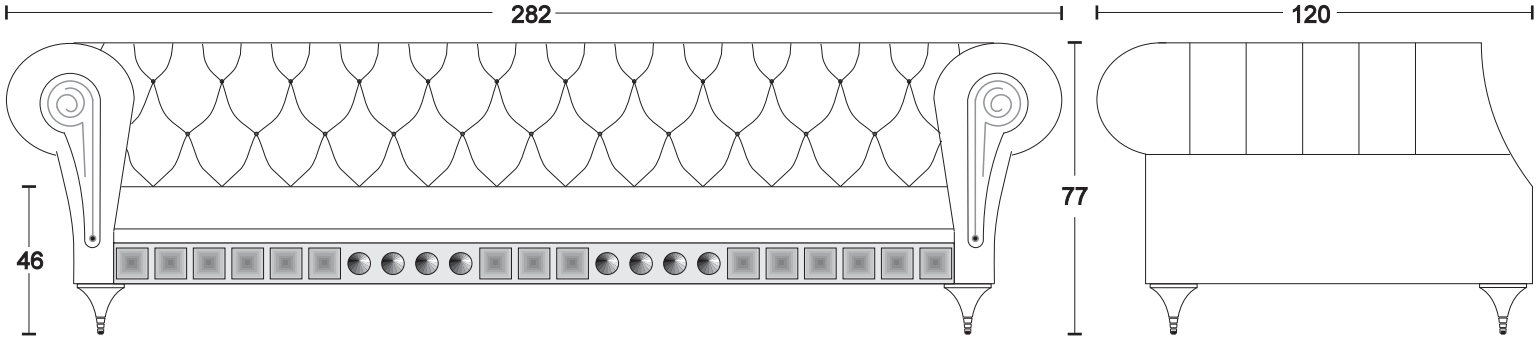

Pelle-Leather cat."SOFT"	Pelle-Leather cat."EXTRA"	Pelle-Leather cat."GLAM"
€ 14.129,50	€ 15.433,00	€ 16.835,50
Eco Nabuk Eco Nubuk	Velluto Velvet	
€ 12.182,50	€ 13.618,00	

CHEST-NOUVEAU-209 PIRAMID DIVANO - SOFA

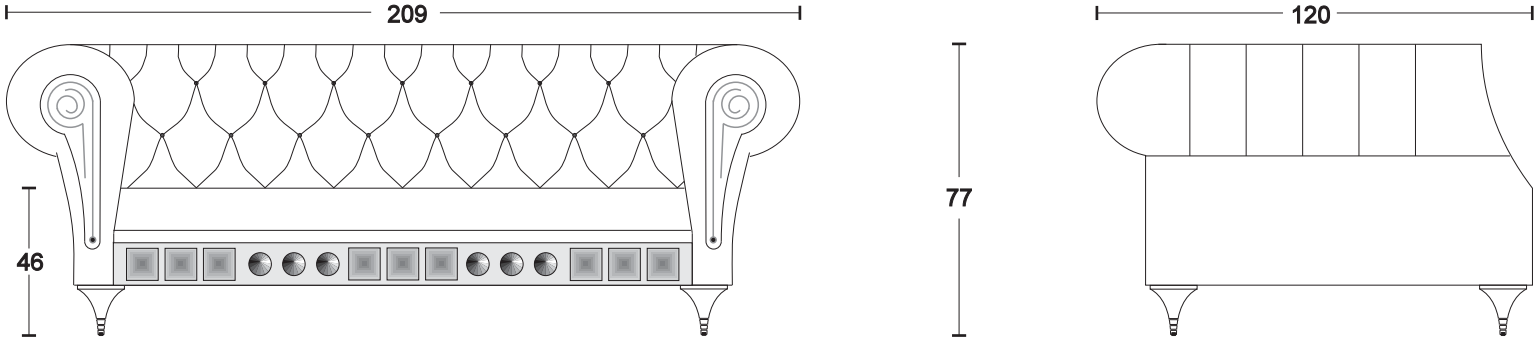

Pelle-Leather cat."SOFT"	Pelle-Leather cat."EXTRA"	Pelle-Leather cat."GLAM"
€ 11.286,00	€ 12.336,50	€ 13.497,00
Eco Nabuk Eco Nubuk	Velluto Velvet	
€ 9.867,00	€ 10.919,70	

CHEST-NOUVEAU-123 PIRAMID POLTRONA - ARMCHAIR

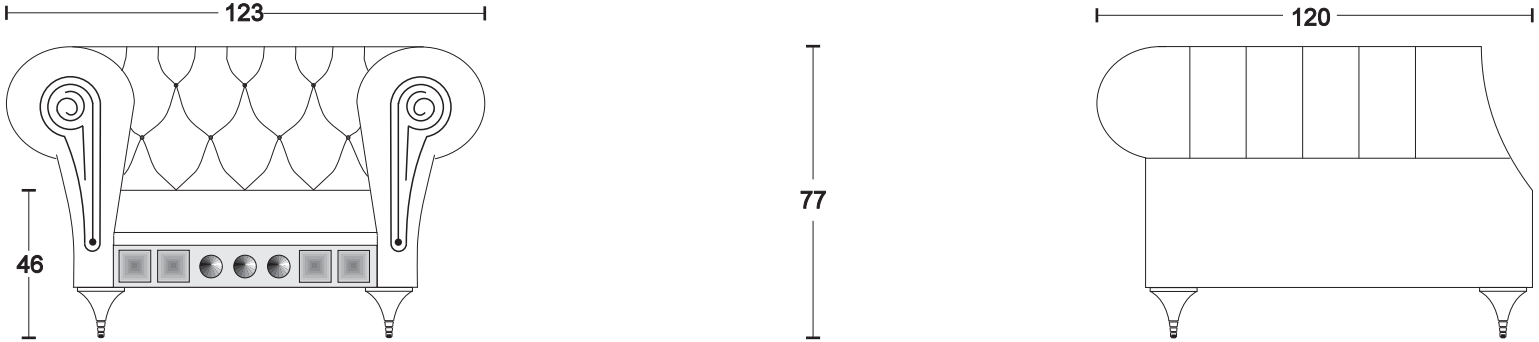

Pelle-Leather cat."SOFT"	Pelle-Leather cat."EXTRA"	Pelle-Leather cat."GLAM"
€ 9.410,50	€ 10.224,50	€ 11.159,50
Eco Nabuk Eco Nubuk	Velluto Velvet	
€ 7.564,70	€ 8.482,10	

CHEST NOUVEAU - PIRAMID

CHAISE LOUNGE - DX

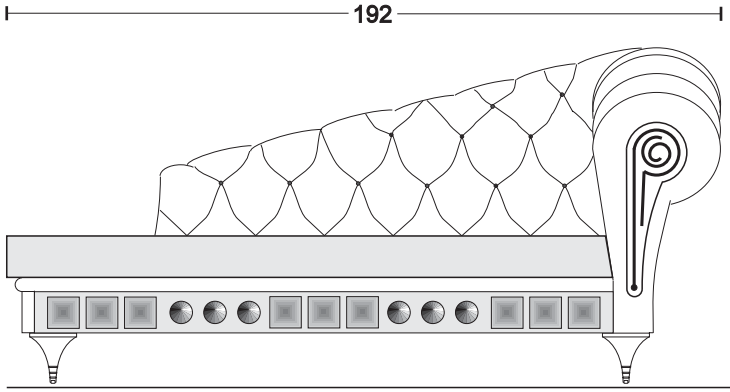

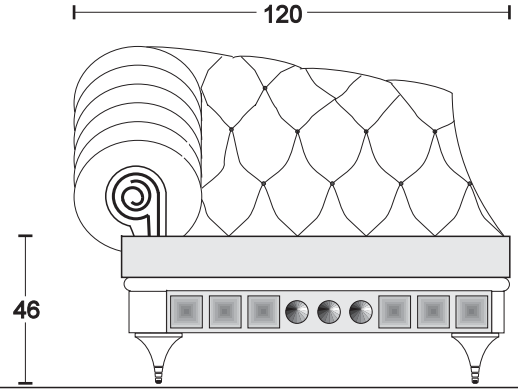

Pelle-Leather cat."SOFT"	Pelle-Leather cat."EXTRA"	Pelle-Leather cat."GLAM"
€ 11.264,00	€ 12.309,00	€ 13.458,50
Eco Nabuk Eco Nubuk	Velluto Velvet	
€ 9.038,70	€ 10.140,90	

CHEST NOUVEAU - PIRAMID

CHAISE LOUNGE - SX

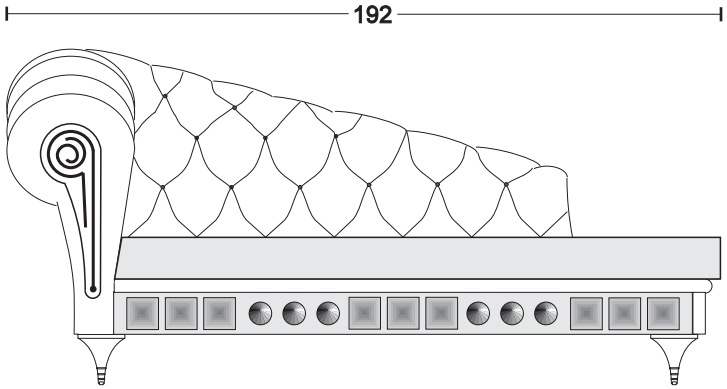

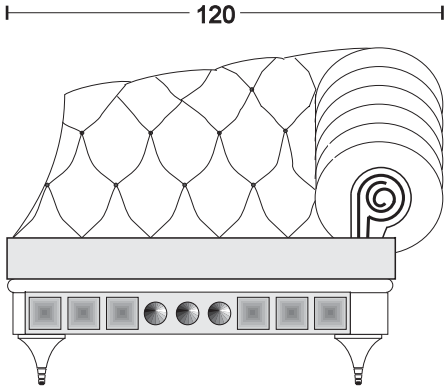

Pelle-Leather cat."SOFT"	Pelle-Leather cat."EXTRA"	Pelle-Leather cat."GLAM"
€ 11.264,00	€ 12.309,00	€ 13.458,50
Eco Nabuk Eco Nubuk	Velluto Velvet	
€ 9.038,70	€ 10.140,90	

CHEST NOUVEAU

Pelle Leather cat.SOFT	Pelle Leather cat.EXTRA	Pelle Leather cat.GLAM	Eco Nabuk Eco Nubuk	Velluto Velvet
€ 495,00	€ 583,00	€ 676,50	€ 284,90	€ 367,40

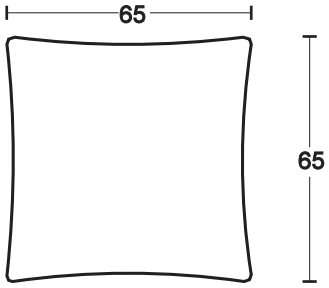

EXTRA CUSCINO - EXTRA CUSCION 65-55-45

Pelle Leather cat.SOFT	Pelle Leather cat.EXTRA	Pelle Leather cat.GLAM	Eco Nabuk Eco Nubuk	Velluto Velvet
€ 456,50	€ 533,50	€ 632,50	€ 266,20	€ 335,50

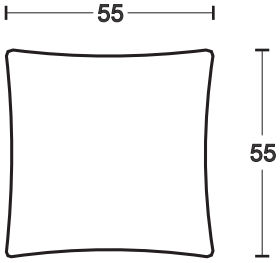

Pelle Leather cat.SOFT	Pelle Leather cat.EXTRA	Pelle Leather cat.GLAM	Eco Nabuk Eco Nubuk	Velluto Velvet
€ 412,50	€ 484,00	€ 561,00	€ 242,00	€ 303,60

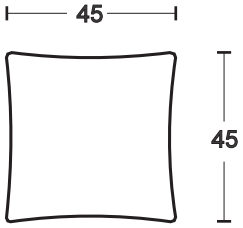

CONFORT NOUVEAU-264 PIRAMID DIVANO - SOFA

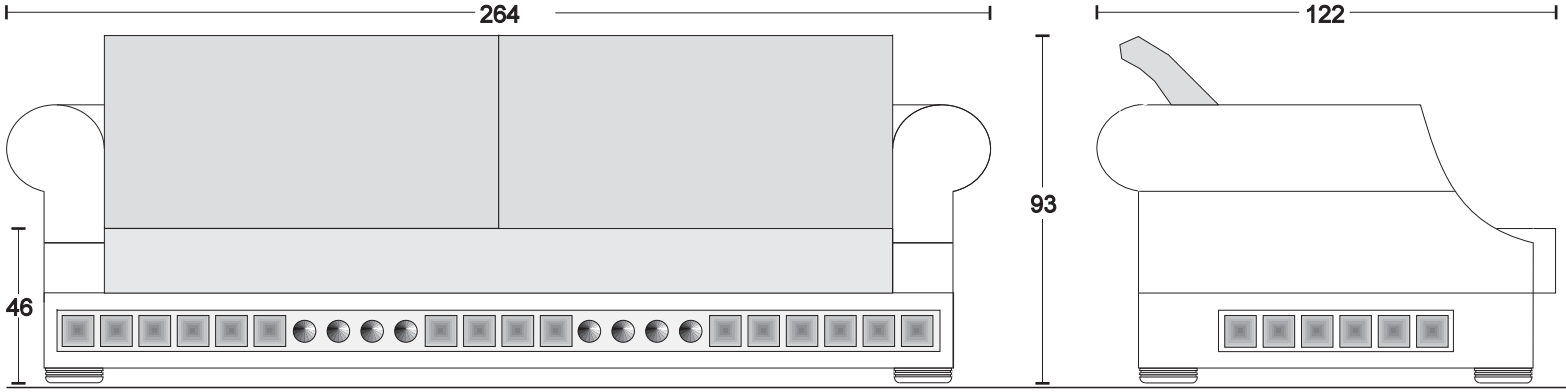

Pelle-Leather cat."SOFT"	Pelle-Leather cat."EXTRA"	Pelle-Leather cat."GLAM"
€ 11.627,00	€ 12.903,00	€ 14.195,50
Eco Nabuk Eco Nubuk	Velluto Velvet	
€ 9.057,40	€ 10.519,30	

CONFORT NOUVEAU-193 PIRAMID DIVANO - SOFA

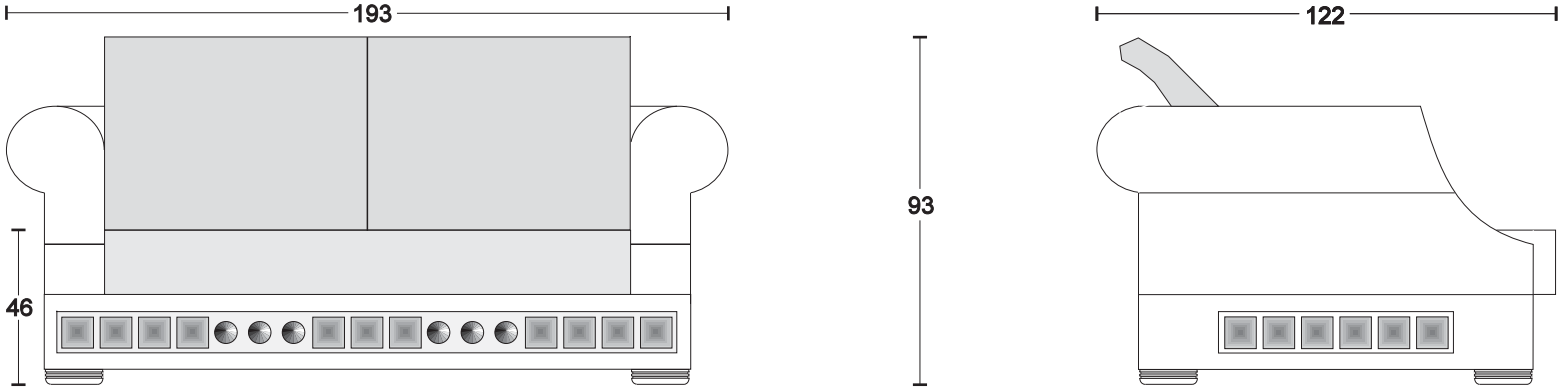

Pelle-Leather cat."SOFT"	Pelle-Leather cat."EXTRA"	Pelle-Leather cat."GLAM"
€ 9.515,00	€ 10.615,00	€ 11.814,00
Eco Nabuk Eco Nubuk	Velluto Velvet	
€ 7.451,40	€ 8.726,30	

CONFORT NOUVEAU-125 PIRAMID POLTRONA - ARMCHAIR

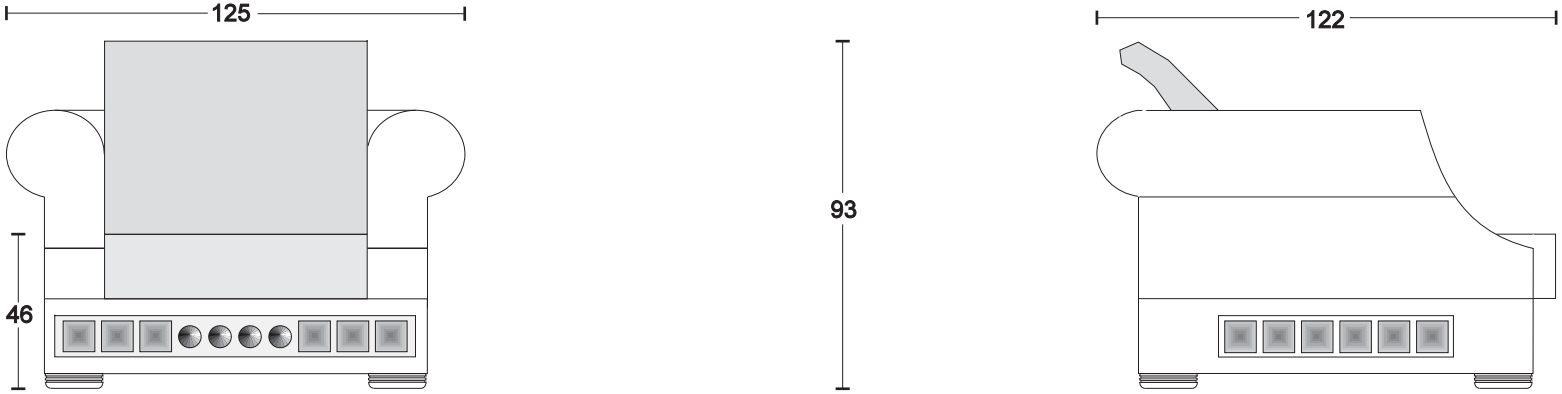

Pelle-Leather cat."SOFT"	Pelle-Leather cat."EXTRA"	Pelle-Leather cat."GLAM"
€ 7.260,00	€ 8.057,50	€ 8.855,00
Eco Nabuk Eco Nubuk	Velluto Velvet	
€ 5.768,40	€ 6.685,80	

CONFORT NOUVEAU-264 LUMBAR CUSHION PIRAMID

DIVANO - SOFA

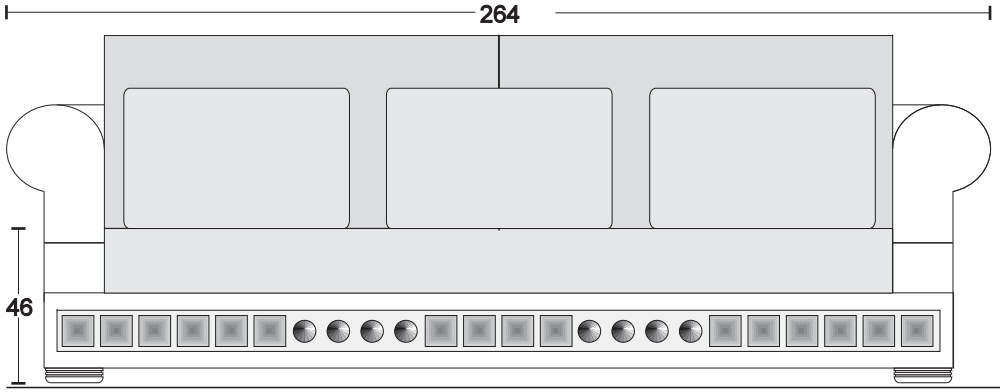

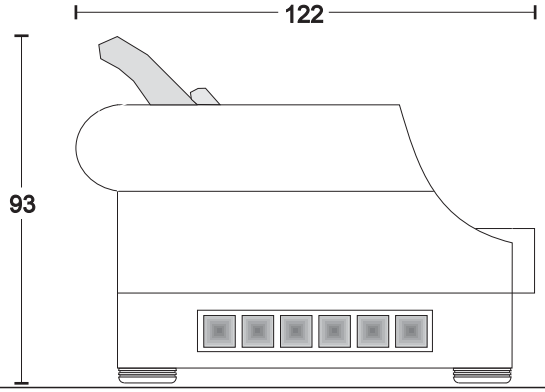

Pelle-Leather cat."SOFT"	Pelle-Leather cat."EXTRA"	Pelle-Leather cat."GLAM"
€ 12.765,50	€ 14.228,50	€ 15.713,50
Eco Nabuk Eco Nubuk	Velluto Velvet	
€ 9.816,40	€ 11.455,40	

CONFORT NOUVEAU-193 LUMBAR CUSHION PIRAMID

DIVANO - SOFA

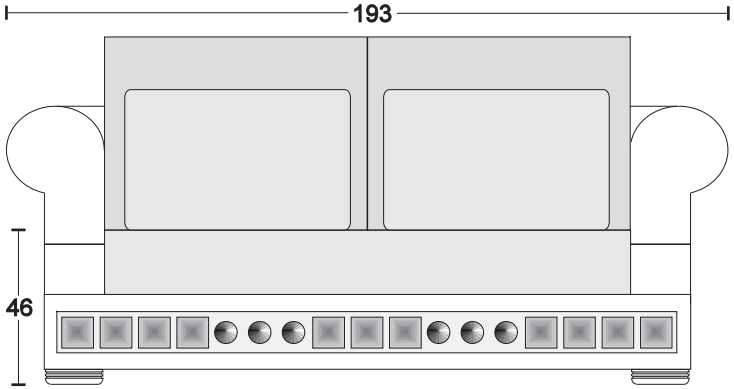

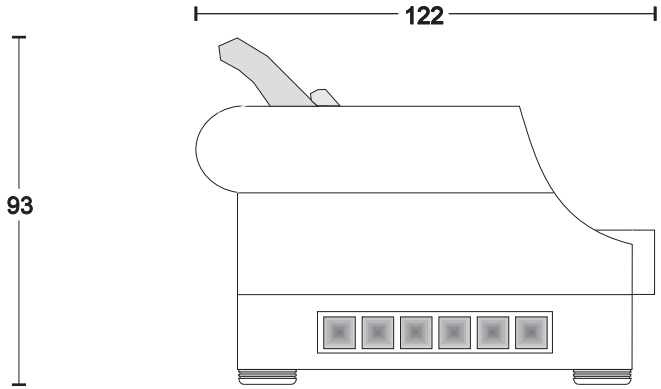

Pelle-Leather cat."SOFT"	Pelle-Leather cat."EXTRA"	Pelle-Leather cat."GLAM"
€ 10.274,00	€ 11.500,50	€ 12.826,00
Eco Nabuk Eco Nubuk	Velluto Velvet	
€ 7.957,40	€ 9.346,70	

CONFORT NOUVEAU-125 LUMBAR CUSHION PIRAMID

POLTRONA - ARMCHAIR

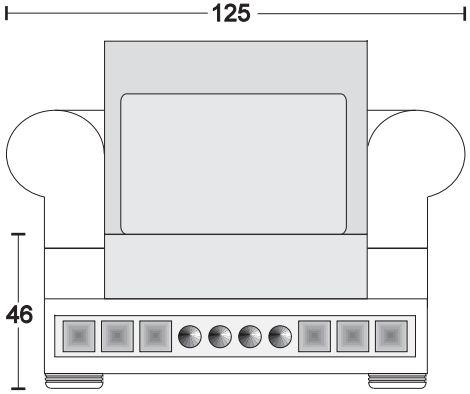

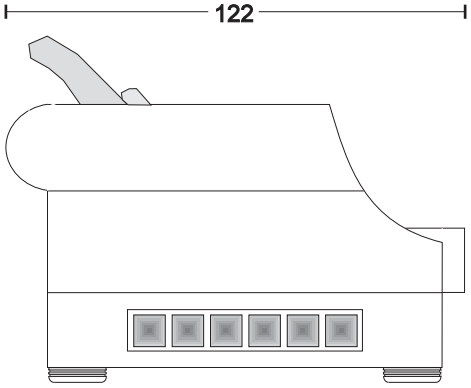

Pelle-Leather cat."SOFT"	Pelle-Leather cat."EXTRA"	Pelle-Leather cat."GLAM"
€ 7.639,50	€ 8.503,00	€ 9.361,00
Eco Nabuk Eco Nubuk	Velluto Velvet	
€ 6.021,40	€ 6.996,00	

CONFORT NOUVEAU- PIRAMID CHAISE LOUNGE - DX

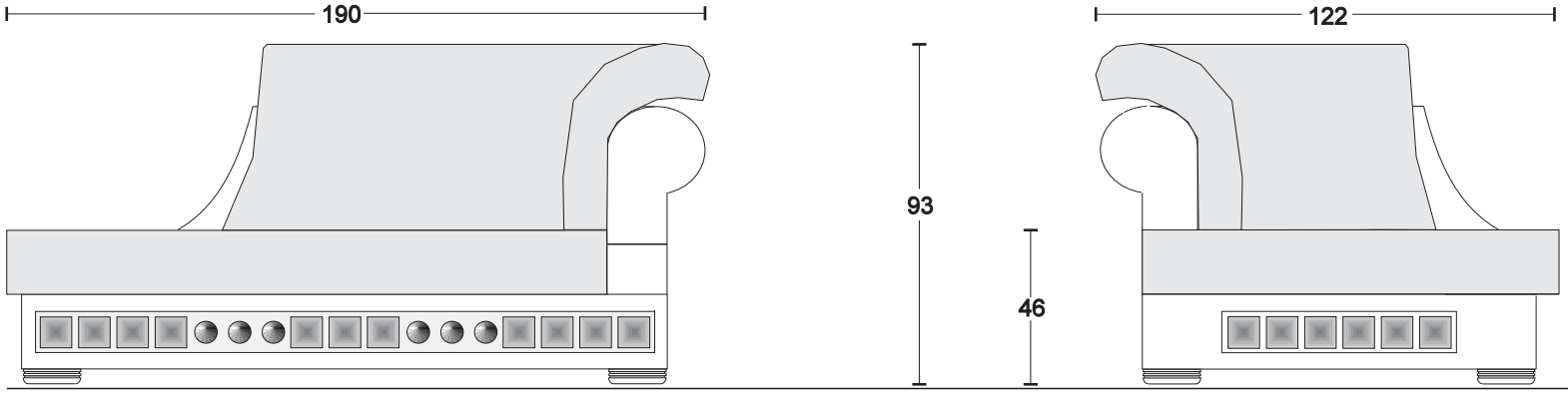

Pelle-Leather cat."SOFT"	Pelle-Leather cat."EXTRA"	Pelle-Leather cat."GLAM"
€ 9.498,50	€ 10.488,50	€ 11.462,00
Eco Nabuk Eco Nubuk	Velluto Velvet	
€ 7.741,80	€ 8.845,10	

CONFORT NOUVEAU- PIRAMID CHAISE LOUNGE - SX

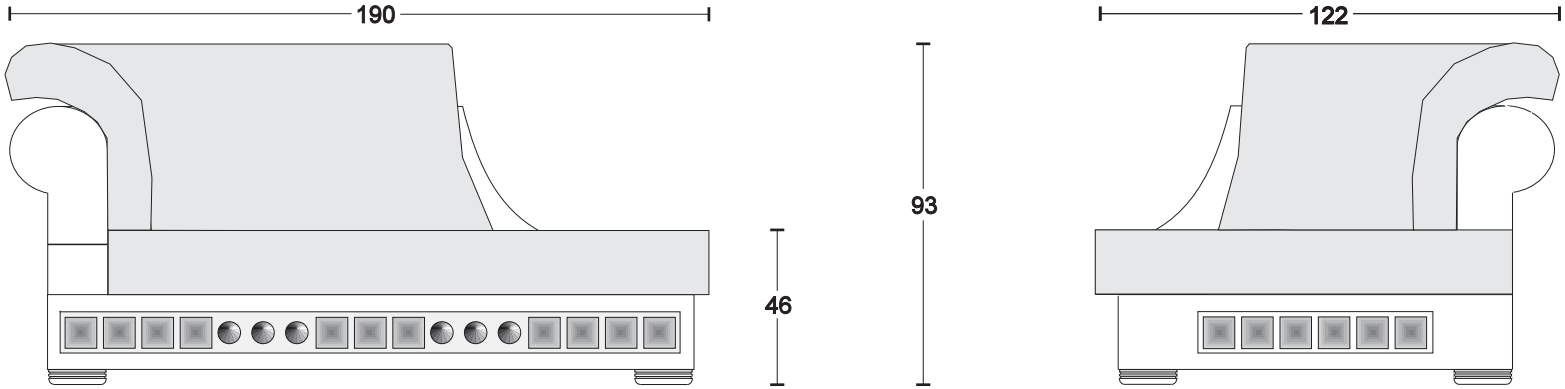

Pelle-Leather cat."SOFT"	Pelle-Leather cat."EXTRA"	Pelle-Leather cat."GLAM"
€ 9.498,50	€ 10.488,50	€ 11.462,00
Eco Nabuk Eco Nubuk	Velluto Velvet	
€ 7.741,80	€ 8.845,10	

CONFORT NOUVEAU

Pelle Leather cat.SOFT	Pelle Leather cat.EXTRA	Pelle Leather cat.GLAM	Eco Nabuk Eco Nubuk	Velluto Velvet
€ 495,00	€ 583,00	€ 676,50	€ 284,90	€ 367,40

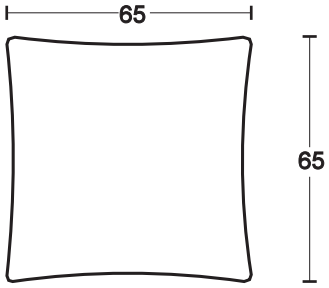

EXTRA CUSCINO - EXTRA CUSCION 65-55-45

Pelle Leather cat.SOFT	Pelle Leather cat.EXTRA	Pelle Leather cat.GLAM	Eco Nabuk Eco Nubuk	Velluto Velvet
€ 456,50	€ 533,50	€ 632,50	€ 266,20	€ 335,50

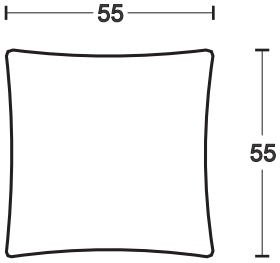

Pelle Leather cat.SOFT	Pelle Leather cat.EXTRA	Pelle Leather cat.GLAM	Eco Nabuk Eco Nubuk	Velluto Velvet
€ 412,50	€ 484,00	€ 561,00	€ 242,00	€ 303,60

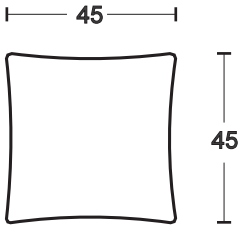

SCRIGNO PIRAMID

Porta CD/DVD per 960 CD (e/o 432 DVD) a parete
Wall CD/DVD Rack for 960 CD (and or 432 DVD)

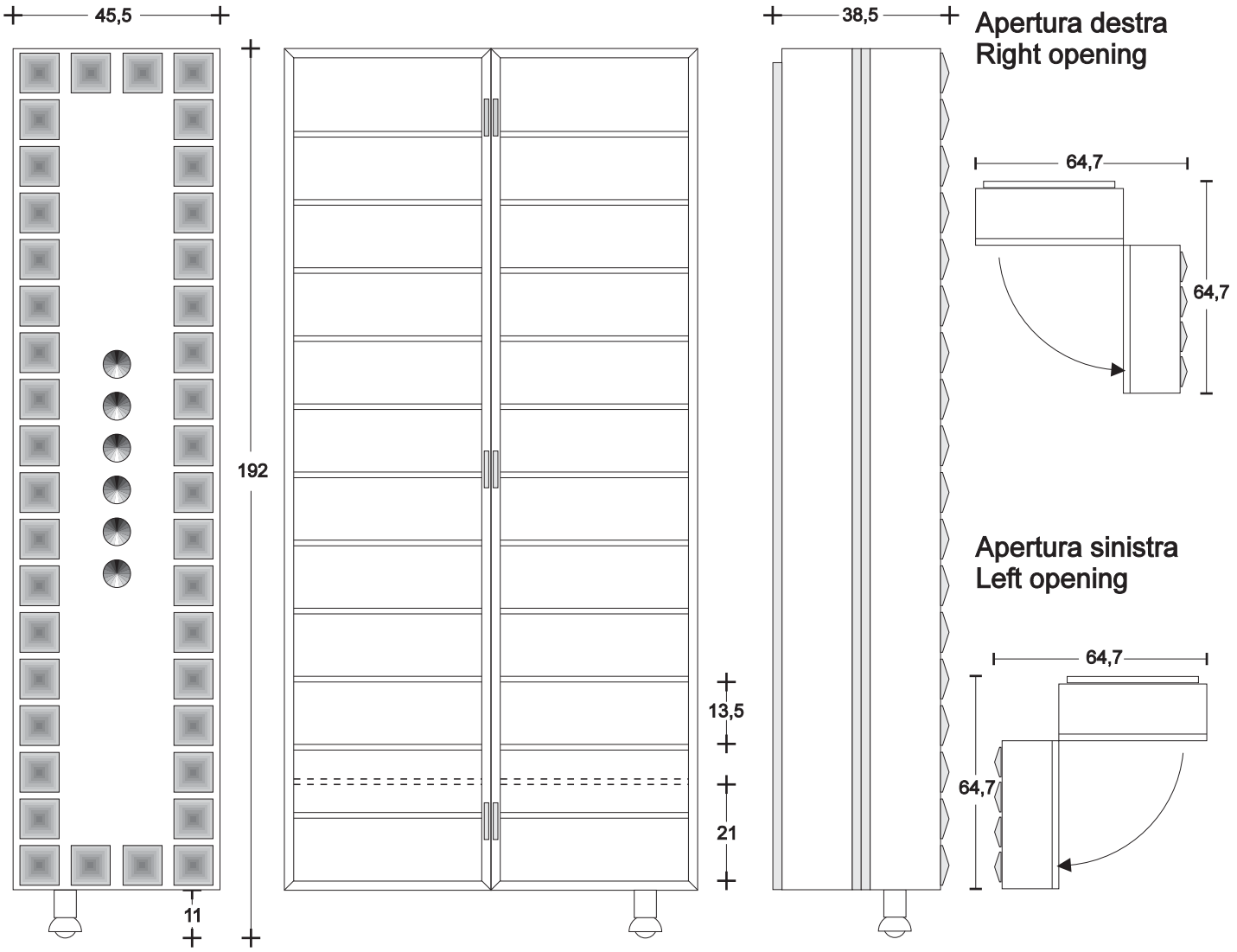

METALBLACK **€ 4.896,10**
piramidi - piramids: ORO FOGLIA - GOLD FOIL
Cornice centrale - Central frame: ORO FOGLIA - GOLD FOIL
Ripiani interni - Inner shelves: METALTITANIO

METALBLACK **€ 4.896,10**
piramidi - piramids: ARGENTO FOGLIA - SILVER FOIL
Cornice centrale - Central frame:ARGENTO FOGLIA - SILVER FOIL
Ripiani interni - Inner shelves:METALTITANIO

BIANCO - WHITE **€ 4.896,10**
piramidi - piramids: ARGENTO FOGLIA - SILVER FOIL
Cornice centrale - Central frame: ARGENTO FOGLIA - SILVER FOIL
Ripiani interni - Inner shelves: METALTITANIO

BIANCO - WHITE **€ 4.896,10**
piramidi - piramids: ORO FOGLIA - ORO FOIL
Cornice centrale - Central frame:ORO FOGLIA - GOLD FOIL
Ripiani interni - Inner shelves:METALTITANIO

BIANCO/NERO LUCIDO - GLOSS WHITE/BLACK **€ 5.680,40**
piramidi - piramids: Bianco/Nero opaco-opaque White/Black
Cornice centrale - Central frame:ARGENTO FOGLIA - SILVER FOIL
Ripiani interni - Inner shelves:METALSILVER

PLAY ROOM - POOL TABLE 10-12 FEET - PIRAMID

10 piedi dimensioni campo gioco cm. 284 x 142 - Dimensioni esterne cm. 320 x 178 - Russo H. 80; Snooker inglese H. 80; Americano H. 78
10 Feet playng fiel dimention cm. 284 x 142 - External dimention cm. 320 x 178 - Russian H. 80; English Snooker H. 80; American H. 78
Con piano in ardesia 40 mm - With playground stone slate 40 mm

12 piedi dimensioni campo gioco cm. 355 x 177 - Dimensioni esterne cm. 391 x 213 - Russo H. 80; Snooker inglese H. 80; Americano H. 78
12 Feet playng fiel dimention cm. 355 x 177 - External dimention cm. 391 x 213 - Russian H. 80; English Snooker H. 80; American H. 78
Con piano in ardesia 40 mm - With playground stone slate 40 mm

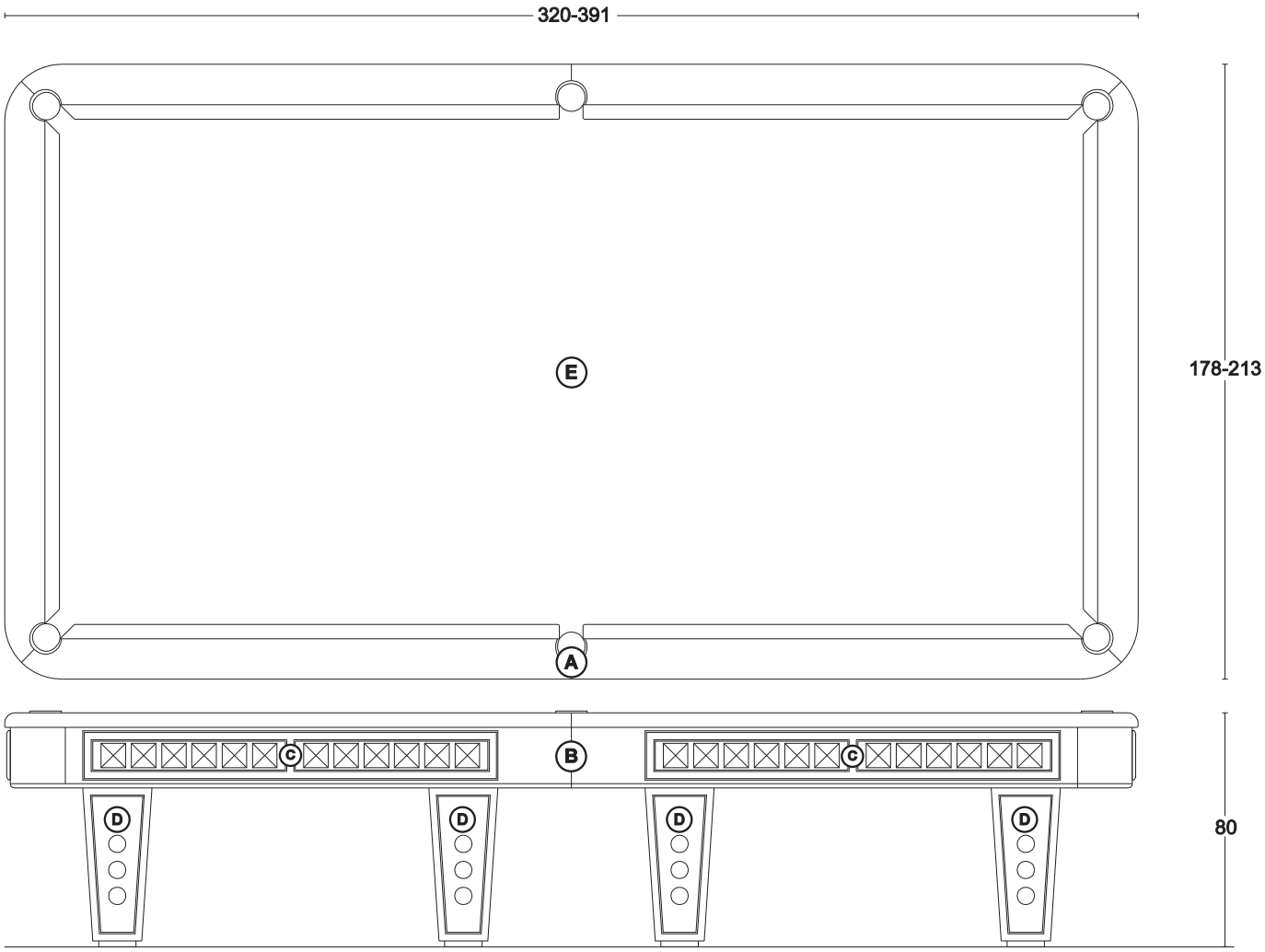

A+B+D Tutti i Laccato opaco — D Decorazioni e Piramidi: Oro/Argento foglia/Tutti i laccati
All Opaque laquered — D Decoration and Piramids: Gold/Silver foil/All Opaque laquered

C Inserti: Tutti i laccati opachi - Decorazioni e Piramidi: Oro/Argento foglia/Tutti i laccati
Insert: All Opaque laquered - Decoration and Piramids: Gold/Silver foil/All Opaque laquered

E Tappeto biliardo colori diversi - Pool table cloth different colours

10 PIEDI-10 FEET € 63.882,50
12 PIEDI-12 FEET € 75.773,50

A+B+D Tutti i Laccato lucido — D Decorazioni e Piramidi: Oro/Argento foglia/Tutti i laccati Lucidi
All Glossy laquered — D Decoration and Piramids: Gold/Silver foil/All Glossy laquered

C Inserti: Tutti i laccati lucidi - Decorazioni e Piramidi: Oro/Argento foglia/Tutti i laccati
Insert: All Glossy laquered - Decoration and Piramids: Gold/Silver foil/All Glossy laquered

E Tappeto biliardo colori diversi - Pool table cloth different colours

10 PIEDI-10 FEET € 65.021,00
12 PIEDI-12 FEET € 76.912,00

PLAY ROOM - POOL LAMP 10-12 FEET - PIRAMID

Lampada a LED per biliardo da 10-12 piedi - 170 Watt - peso kg. 85
LED Lamp for Pool 10-12 Feet - 170 Watt - Weight Kg. 85

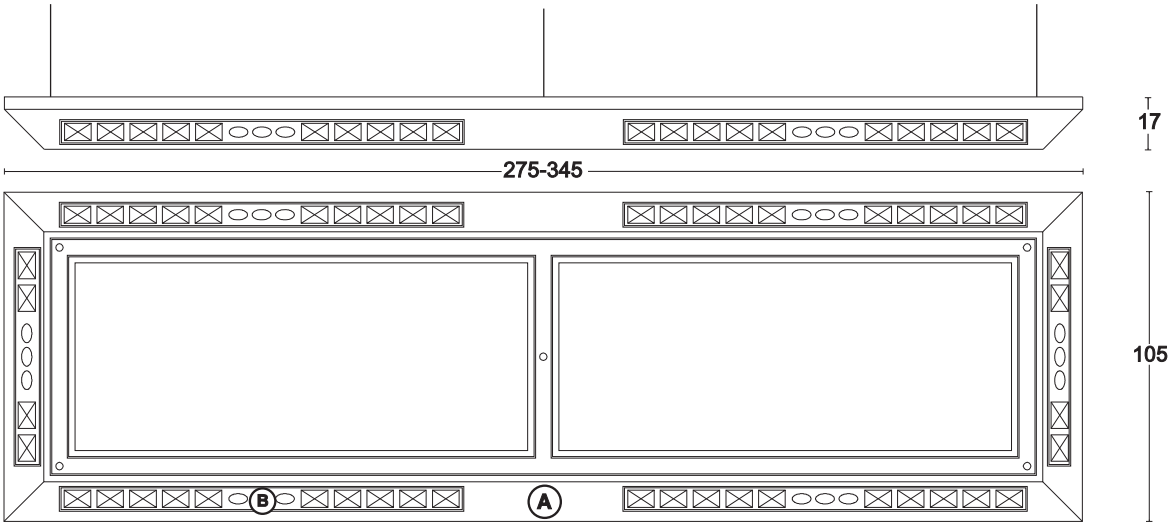

(A) Tutti i Laccato opaco - Decorazioni: anche in Oro/Argento foglia **€ 12.650,00**
All Opaque laquered - Decoration: Also Gold/Silver foil

(B) nserti: Tutti i laccati opachi - Decorazioni e Piramidi: Oro/Argento foglia/Tutti i laccati
Insert: All Opaque laquered - Decoration and Piramids: Gold/Silver foil/All Opaque laquered

(A) Tutti i Laccato lucido - Decorazioni: anche in Oro/Argento foglia **€ 12.650,00**
All Glossy laquered - Decoration: Also in Gold/Silver foil

(B) Inserti: Tutti i laccati lucidi - Decorazioni e Piramidi: Oro/Argento foglia/Tutti i laccati
Insert: All Glossy laquered - Decoration and Piramids: Gold/Silver foil/All Glossy laquered

CUE RACK-BODY-R - PIRAMID

Porta stecche per biliardo da 10-12 piedi con orologio al quarzo
Pool Cue Rack for 10-12 Feet with quarz clock

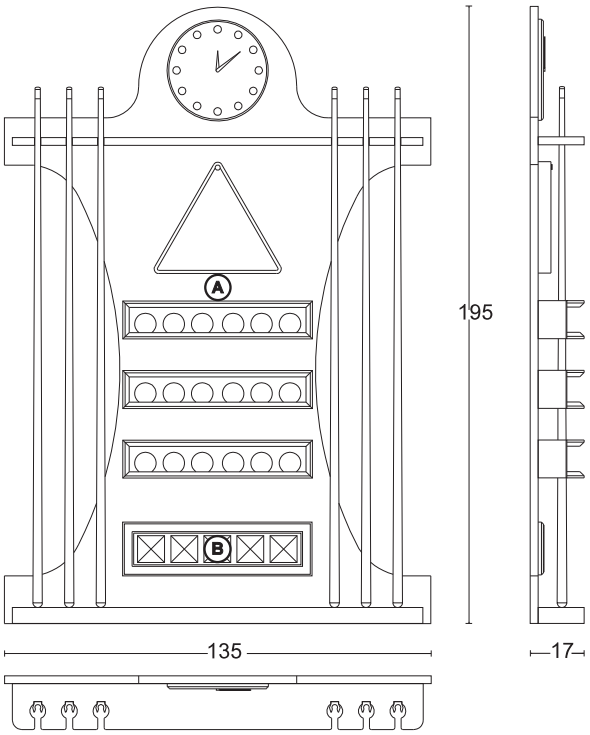

(A) Tutti i Laccato opaco - All Opaque laquered **€ 5.250,30**

(B) Inserti: Tutti i laccati opachi
Decorazioni e Piramidi: Oro/Argento foglia/Tutti i laccati
Insert: All Opaque laquered
Decoration and Piramids: Gold/Silver foil/All Opaque laquered

(A) Tutti i Laccato lucido - All Glossy laquered **€ 6.009,30**

(B) Inserti: Tutti i laccati lucidi
Decorazioni e Piramidi: Oro/Argento foglia/Tutti i laccati
Insert: All Glossy laquered
Decoration and Piramids: Gold/Silver foil/All Glossy laquered

- stecche in legno L.-Standard - da cm.160 (set 6 pezzi) - wooden Pool cue L.-Standard - cm. 160 (set 6 pieces) **€ 2.428,80**
- Set biglie Ø 52,4 mm. Snooker inglese - Ø 57mm. per Pool americano - Ø 68 mm per Piramide russa **€ 607,20**
  Set balls Ø 52,4 mm. english Snooker - Ø 57mm. American Pool - Ø 68 mm Russian Piramid

PLAY ROOM - POOL TABLE 8-9 FEET - PIRAMID

8 piedi dimensioni campo gioco cm. 224 x 112 - Dimensioni esterne cm. 260 x 148 - Russo H. 80; Snooker inglese H. 80; Americano H. 78
8 Feet playng fiel dimention cm. 224 x 112 - External dimention cm. 260 x 148 - Russian H. 80; English Snooker H. 80; American H. 78
Con piano in ardesia 25 mm - With playground stone slate 25 mm

9 piedi dimensioni campo gioco cm. 254 x 112 - Dimensioni esterne cm. 290 x 163 - Russo H. 80; Snooker inglese H. 80; Americano H. 78
9 Feet playng fiel dimention cm. 254 x 127 - External dimention cm. 290 x 163 - Russian H. 80; English Snooker H. 80; American H. 78
Con piano in ardesia 25 mm - With playground stone slate 25 mm

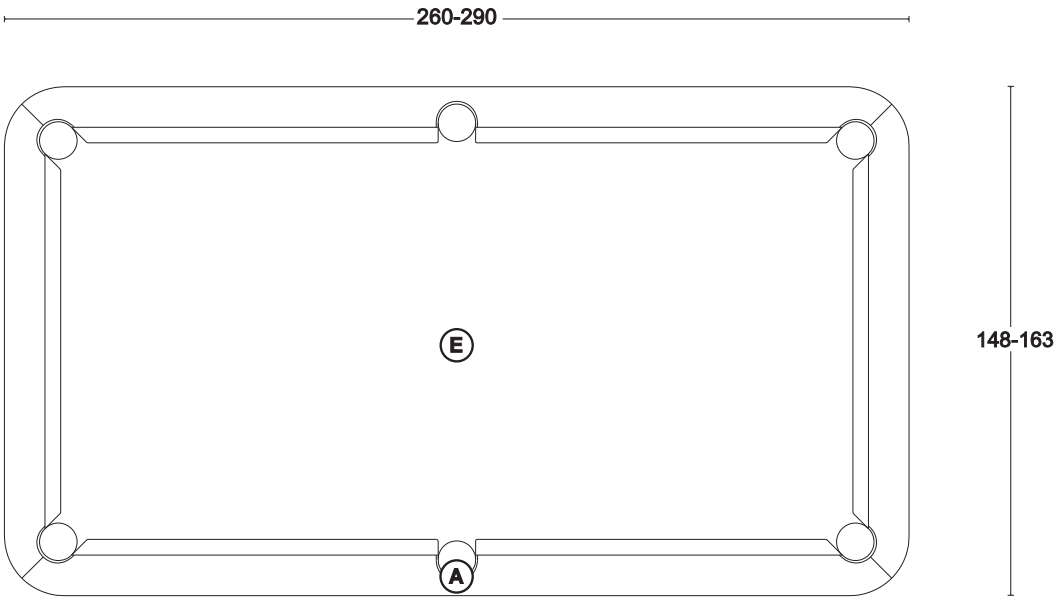

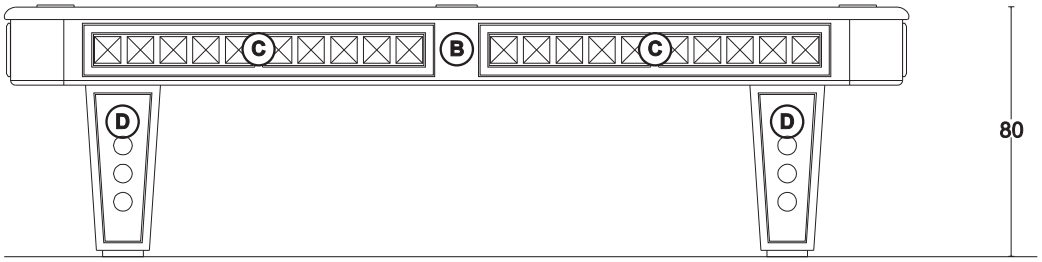

A+B+D Tutti i Laccato opaco / All Opaque laquered — D Decorazioni e Piramidi: Oro/Argento foglia/Tutti i laccati / D Decoration and Piramids: Gold/Silver foil/All Opaque laquered

C Inserti: Tutti i laccati opachi - Decorazioni e Piramidi: Oro/Argento foglia/Tutti i laccati
Insert: All Opaque laquered - Decoration and Piramids: Gold/Silver foil/All Opaque laquered

E Tappeto biliardo colori diversi - Pool table cloth different colours

8 PIEDI-8 FEET € 43.642,50
9 PIEDI-9 FEET € 43.642,50

A+B+D Tutti i Laccato lucido / All Glossy laquered — D Decorazioni e Piramidi: Oro/Argento foglia/Tutti i laccati Lucidi / D Decoration and Piramids: Gold/Silver foil/All Glossy laquered

C Inserti: Tutti i laccati lucidi - Decorazioni e Piramidi: Oro/Argento foglia/Tutti i laccati
Insert: All Glossy laquered - Decoration and Piramids: Gold/Silver foil/All Glossy laquered

E Tappeto biliardo colori diversi - Pool table cloth different colours

8 PIEDI-8 FEET € 44.654,50
9 PIEDI-9 FEET € 44.654,50

PLAY ROOM - POOL LAMP 8-9 FEET - PIRAMID

Lampada a LED per biliardo da 8-9 piedi - 130 Watt - peso kg. 70
LED Lamp for Pool 8-9 Feet - 130 Watt - Weight Kg. 70

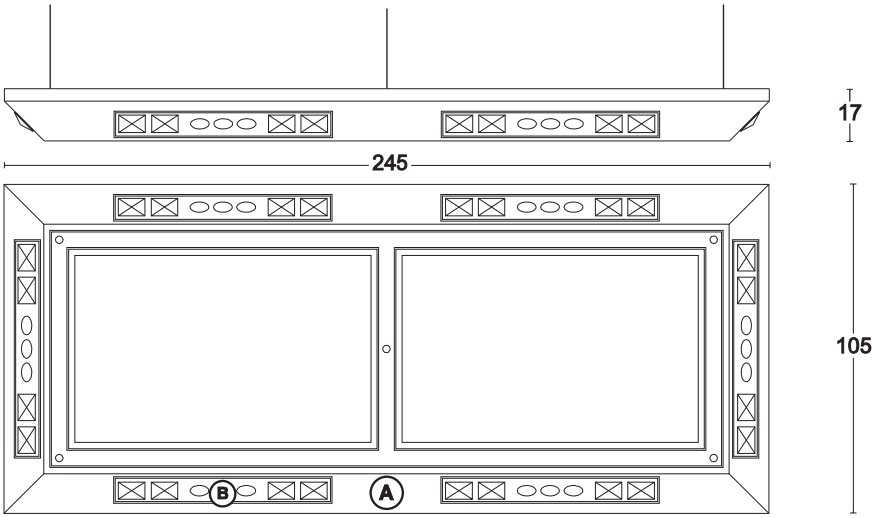

(A) Tutti i Laccato opaco - Decorazioni: anche in Oro/Argento foglia **€ 10.626,00**
All Opaque laquered - Decoration: Also Gold/Silver foil

(B) nserti: Tutti i laccati opachi - Decorazioni e Piramidi: Oro/Argento foglia/Tutti i laccati
Insert: All Opaque laquered - Decoration and Piramids: Gold/Silver foil/All Opaque laquered

(A) Tutti i Laccato lucido - Decorazioni: anche in Oro/Argento foglia **€ 11.385,00**
All Glossy laquered - Decoration: Also in Gold/Silver foil

(B) Inserti: Tutti i laccati lucidi - Decorazioni e Piramidi: Oro/Argento foglia/Tutti i laccati
Insert: All Glossy laquered - Decoration and Piramids: Gold/Silver foil/All Glossy laquered

CUE RACK-BODY-A - PIRAMID

Porta stecche per biliardo da 8-9 piedi con orologio al quarzo
Pool Cue Rack for 8-9 Feet with quarz clock

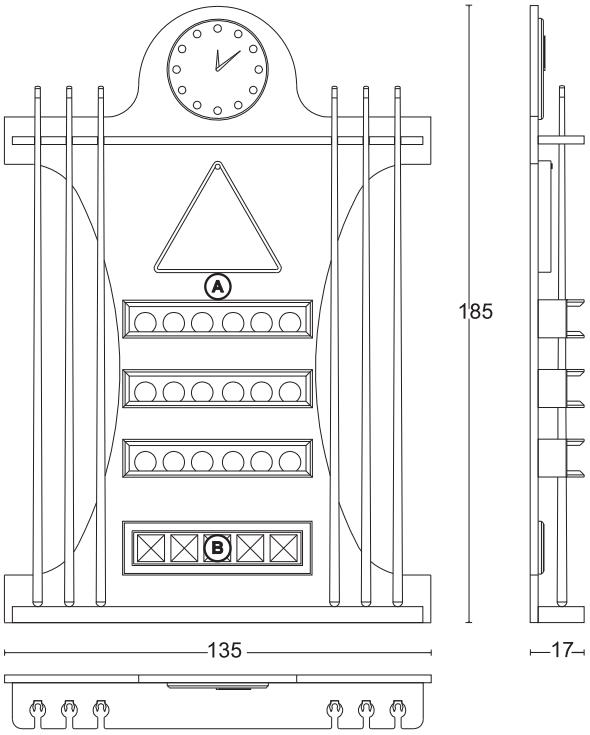

(A) Tutti i Laccato opaco - All Opaque laquered **€ 5.250,30**

(B) Inserti: Tutti i laccati opachi
Decorazioni e Piramidi: Oro/Argento foglia/Tutti i laccati
Insert: All Opaque laquered
Decoration and Piramids: Gold/Silver foil/All Opaque laquered

(A) Tutti i Laccato lucido - All Glossy laquered **€ 6.009,30**

(B) Inserti: Tutti i laccati lucidi
Decorazioni e Piramidi: Oro/Argento foglia/Tutti i laccati
Insert: All Glossy laquered
Decoration and Piramids: Gold/Silver foil/All Glossy laquered

- stecche in legno L.-Standard - da cm.145 (set 6 pezzi) - wooden Pool cue L.-Standard - cm. 145 (set 6 pieces) **€ 1.821,60**
- Set biglie Ø 52,4 mm. Snooker inglese - Ø 57mm. per Pool americano - Ø 68 mm per Piramide russa **€ 607,20**
  Set balls Ø 52,4 mm. english Snooker - Ø 57mm. American Pool - Ø 68 mm Russian Piramid

MODERN 263 > 298

VISMARADESIGN®

TV - LIFT & FIRE - 158 - MODERN

Struttura per Home Cinema - a parete (con salita TV motorizzata computerizzata e telecomandata - completo di Bio-Camino ecologico)
Home Cinema - Wall Rack (motorized, computerized and remote-controlled TV lift system - provided with ecological bio-fireplace)

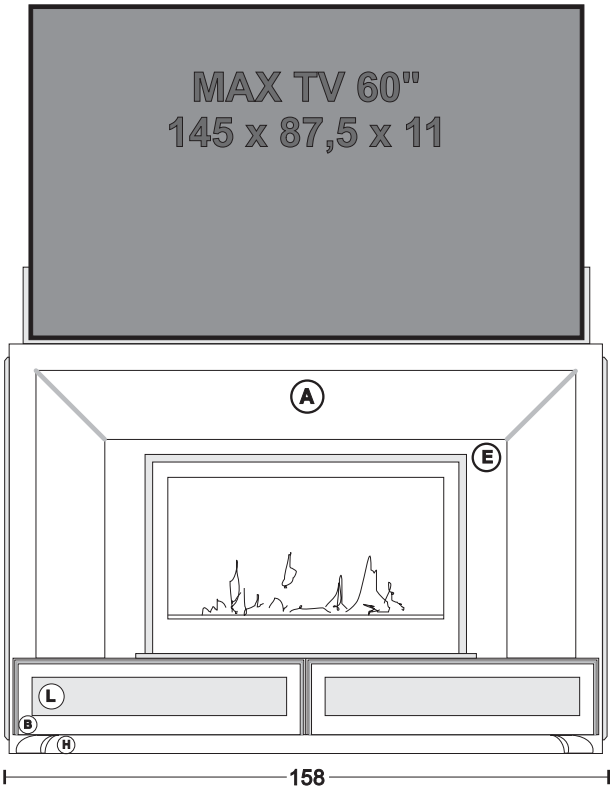

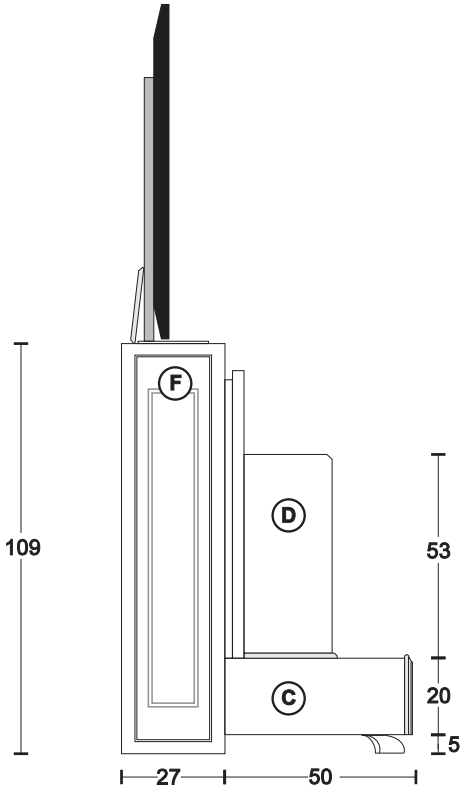

Finiture e combinazioni - Finishings and combinations

A+B+H	ORO/ARGENTO FOGLIA (gold/silverfoil)	C+D+E+F	TUTTI I LACCATI OPACHI (all opaque laquering) (decorazioni argento foglia - silver foil decorations)	L	VETRI BIANCO/FUME (glass white or fume)	€ 18.518,50
A+B+H	NERO o BIANCO LUCIDO (gloss black or white)	C+D+E+F	NERO o BIANCO (black or white) (decorazioni argento foglia - silver foil decorations)	L	VETRI BIANCO/FUME (glass white or fume)	€ 18.771,50
A+B	TUTTE LE PELLI (all our leather)	C+D+E+F+H	TUTTI I LACCATI OPACHI (all opaque laquering)	L	VETRI BIANCO/FUME (glass white or fume)	€ 20.416,00

TV - LIFT & BAR - 158 - MODERN

Struttura per Home Cinema - a parete (con salita TV motorizzata computerizzata e telecomandata - completo di Mobile a 3 ante push)
Home Cinema - Wall Rack (with motorized, computerized and remote-controlled TV lift system - provided with a 3 push-doors cabinet)

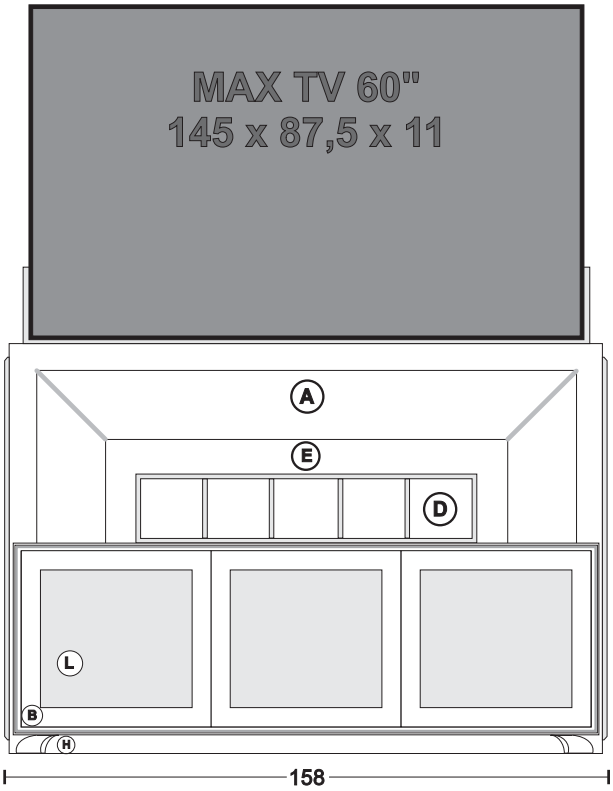

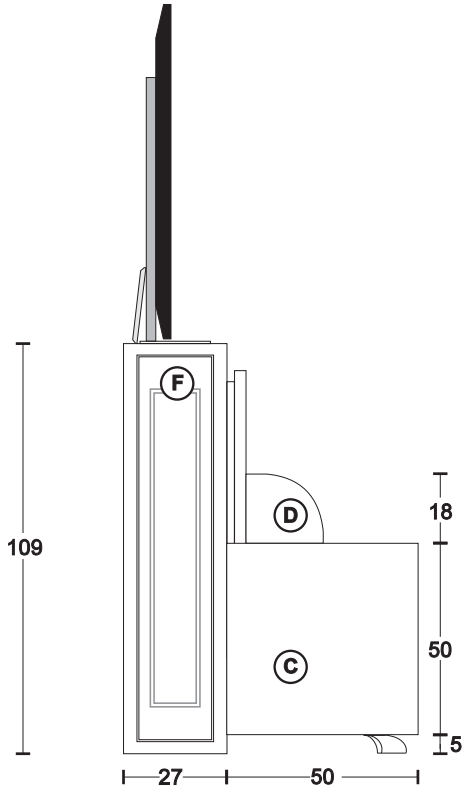

Finiture e combinazioni - Finishings and combinations

A+B+H	ORO/ARGENTO FOGLIA (gold/silverfoil)	C+D+E+F	TUTTI I LACCATI OPACHI (all opaque laquering) (decorazioni argento foglia - silver foil decorations)	L	VETRI BIANCO/FUME (glass white or fume)	€ 16.836,60
A+B+H	NERO o BIANCO LUCIDO (gloss black or white)	C+D+E+F	NERO o BIANCO (black or white) (decorazioni argento foglia - silver foil decorations)	L	VETRI BIANCO/FUME (glass white or fume)	€ 17.089,60
A+B	TUTTE LE PELLI (all our leather)	C+D+E+F+H	TUTTI I LACCATI OPACHI (all opaque laquering)	L	VETRI BIANCO/FUME (glass white or fume)	€ 19.114,70

TV - LIFT & FIRE - 182 - MODERN

Struttura per Home Cinema - a parete (con salita TV motorizzata computerizzata e telecomandata - completo di Bio-Camino ecologico)
Home Cinema - Wall Rack (motorized, computerized and remote-controlled TV lift system - provided with ecological bio-fireplace)

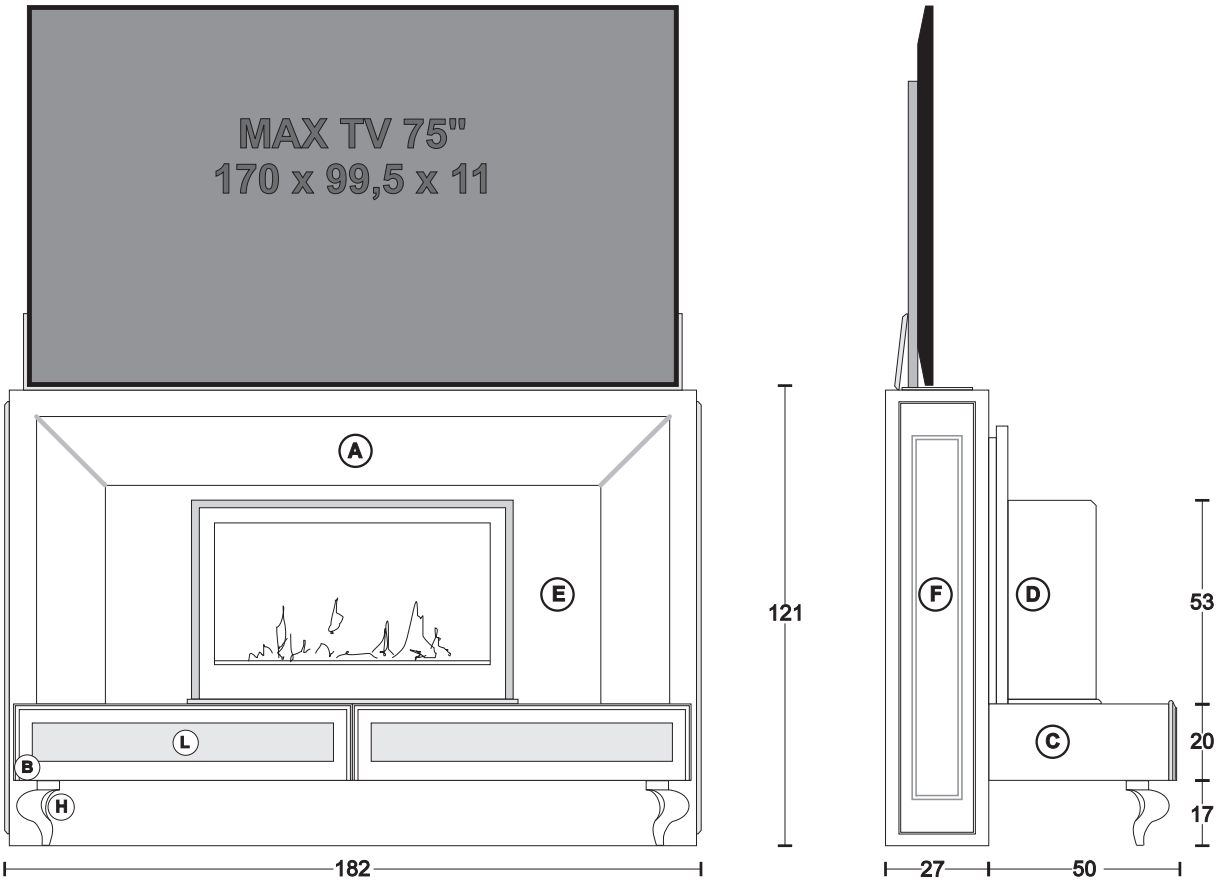

Finiture e combinazioni - Finishings and combinations

A+H	ORO/ARGENTO FOGLIA (gold/silverfoil)	B+C+D+E+F	TUTTI I LACCATI OPACHI (all opaque laquering) (decorazioni argento foglia - silver foil decorations)	L	VETRI BIANCO/FUME (glass white or fume)	€ 18.909,00
A+H	NERO o BIANCO LUCIDO (gloss black or white)	B+C+D+E+F	NERO o BIANCO (black or white) (decorazioni argento foglia - silver foil decorations)	L	VETRI BIANCO/FUME (glass white or fume)	€ 19.162,00
A+B	TUTTE LE PELLI (all our leather)	C+D+E+F+H	TUTTI I LACCATI OPACHI (all opaque laquering)	L	VETRI BIANCO/FUME (glass white or fume)	€ 20.812,00

TV - LIFT & BAR - 182 - MODERN

Struttura per Home Cinema - a parete (con salita TV motorizzata computerizzata e telecomandata - completo di Mobile a 4 ante push)
Home Cinema - Wall Rack (with motorized, computerized and remote-controlled TV lift system - provided with a 4 push-doors cabinet)

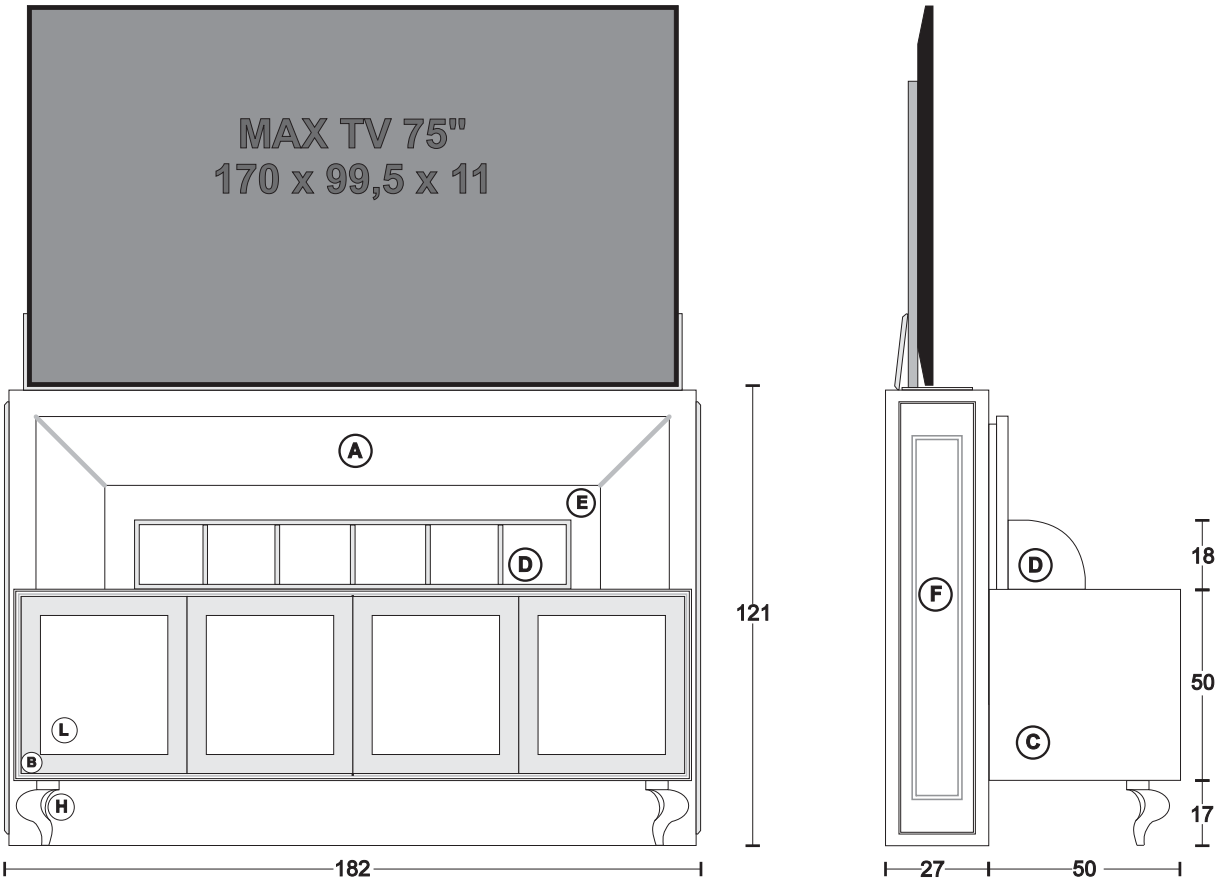

Finiture e combinazioni - Finishings and combinations

A+B+H	ORO/ARGENTO FOGLIA (gold/silverfoil)	C+D+E+F	TUTTI I LACCATI OPACHI (all opaque laquering) (decorazioni argento foglia - silver foil decorations)	L	VETRI BIANCO/FUME (glass white or fume)	€ 17.330,50
A+B+H	NERO o BIANCO LUCIDO (gloss black or white)	C+D+E+F	NERO o BIANCO (black or white) (decorazioni argento foglia - silver foil decorations)	L	VETRI BIANCO/FUME (glass white or fume)	€ 17.583,50
A+B	TUTTE LE PELLI (all our leather)	C+D+E+F+H	TUTTI I LACCATI OPACHI (all opaque laquering)	L	VETRI BIANCO/FUME (glass white or fume)	€ 19.673,50

SLIDING HOME CINEMA - MODERN

Struttura per Home Cinema - a parete con apertura motorizzata, computerizzata e telecomandata - luci led laterali
Home Cinema - Wall Rack - Motorized and computerized opening, with remote control - LED lights on sides

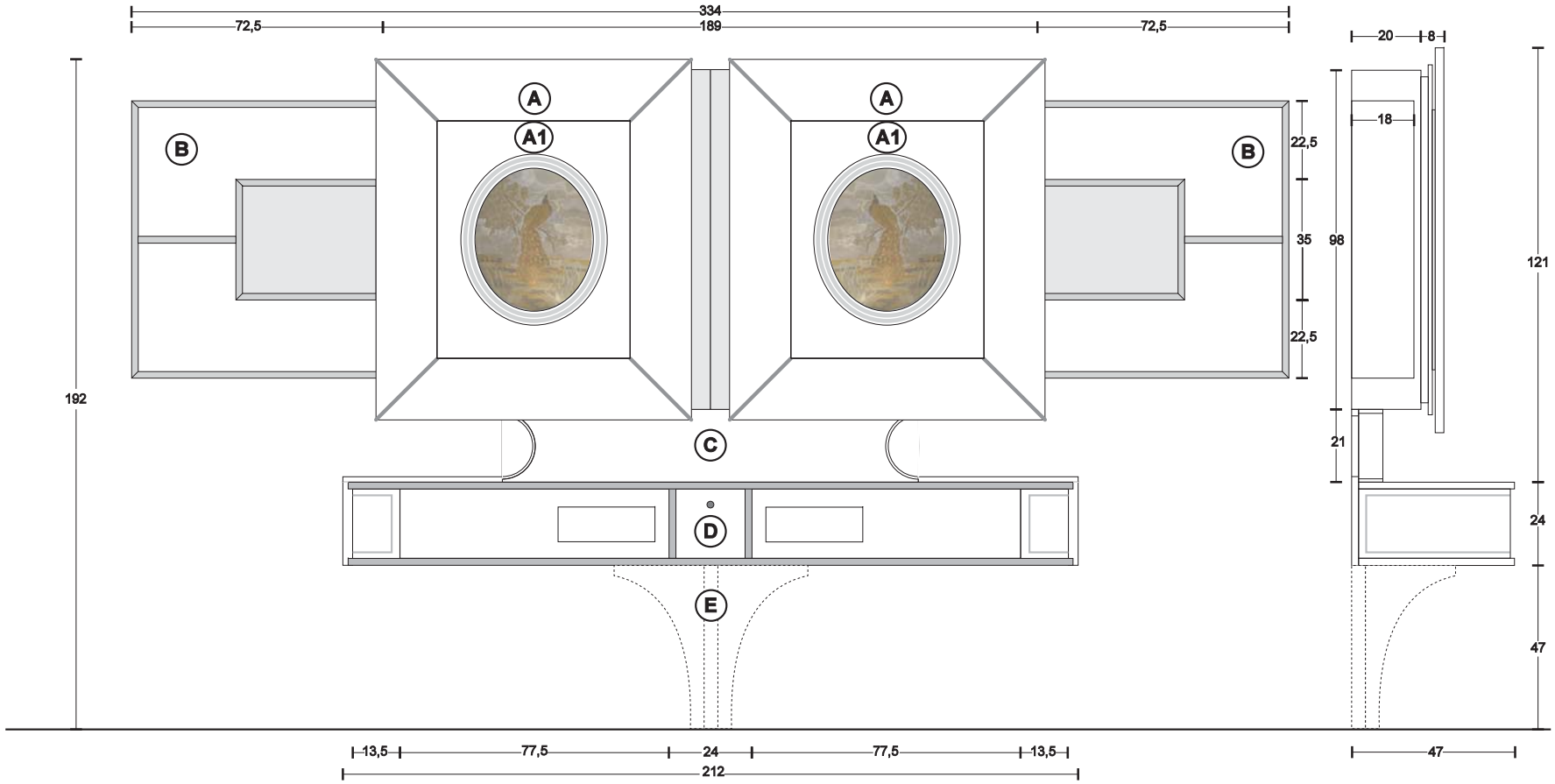

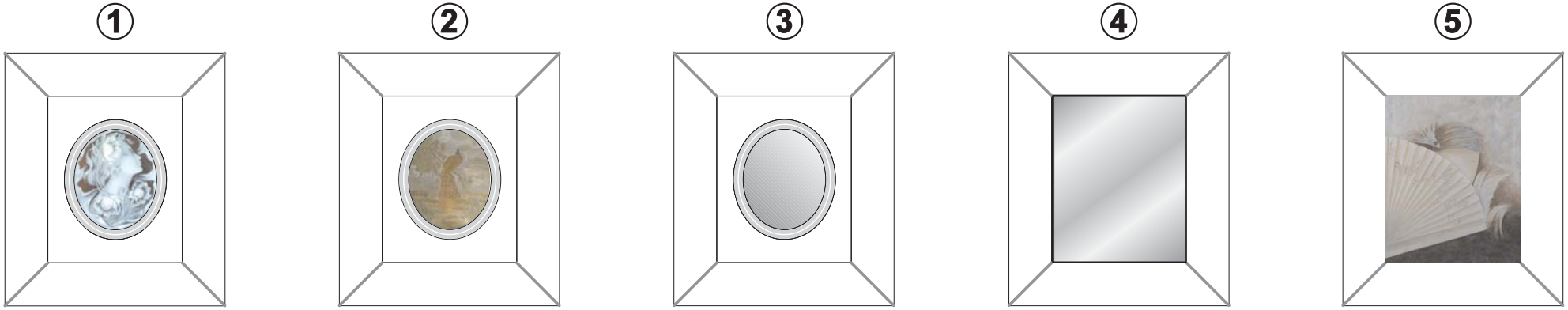

SLIDING HOME CINEMA - MODERN

Struttura per Home Cinema - a parete con apertura motorizzata, computerizzata e telecomandata - luci led laterali
Home Cinema - Wall Rack - Motorized and computerized opening, with remote control - LED lights on sides

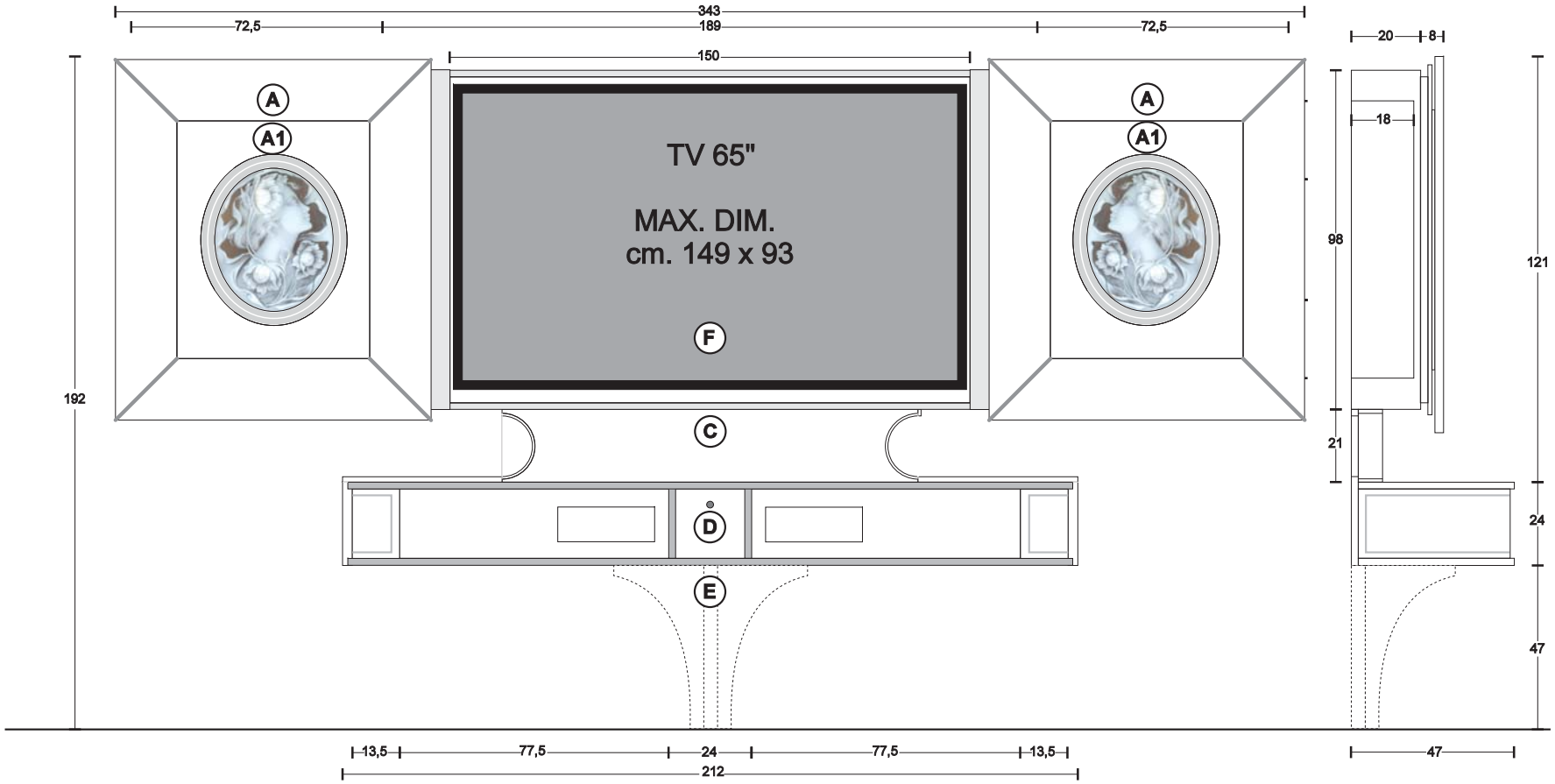

(A) Oro/Argento Foglia/tutti i laccati
Gold/Silver foil/all laquering

(A1) + (C) + (E) + (F) Tutti i laccati opachi
all opaque laquering

(B) Tutti i laccati opachi-Decorazioni Oro/Argento
all opaque laquering-decoration gold/silver foil

(D) Top Oro/Argento Foglia-parti rimanenti
tutti i laccati opachi-Decorazioni Oro/Argento
Top gold/silver foil-remaining parts all opaque laquering-decoration gold/silver foil

Con-with (1) EURO 19.885,80 | Con-with (2) EURO 23.237,50 | Con-with (3) EURO 19.228,00 | Con-with (4) EURO 19.278,60 | Con-with (5) EURO 20.113,50

(A) Tutte le nostre pelli
All our Leather

(A1) + (C) + (E) + (F) Tutti i laccati opachi
all opaque laquering

(B) Tutti i laccati opachi-Decorazioni Oro/Argento
all opaque laquering-decoration gold/silver foil

(D) Top Tutte le Nostre pelli-parti rimanenti
tutti i nostri laccati opachi
Top all our Leathers-remaining parts all opaque laquering-decoration gold/silver foil

Con-with (1) EURO 22.049,50 | Con-with (2) EURO 25.401,20 | Con-with (3) EURO 21.378,50 | Con-with (4) EURO 21.429,10 | Con-with (5) EURO 22.277,20

REVOLVING HOME CINEMA - MODERN

Struttura per Home Cinema - centro stanza con rotazione TV motorizzata, computerizzata e telecomandata
Home Cinema - Standing rack - Motorized and computerized revolving TV , with remote control

LATO -SIDE "A"

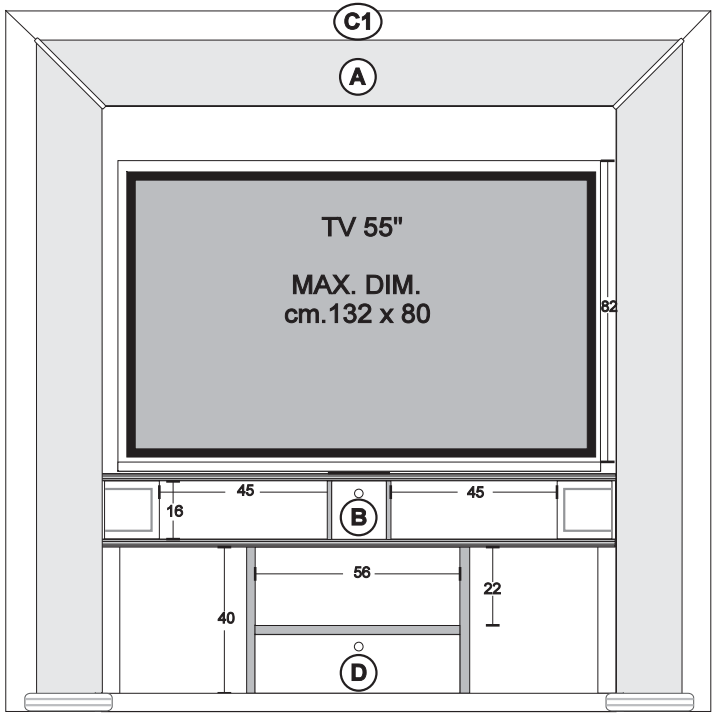

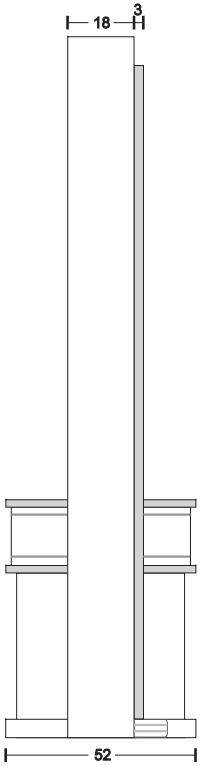

LATO -SIDE "B"

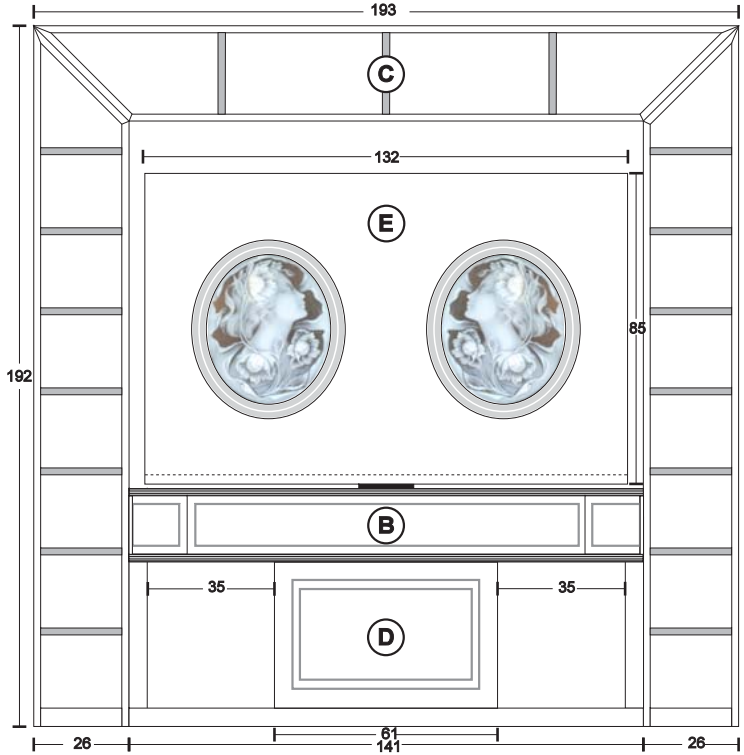

REVOLVING HOME CINEMA - MODERN

Struttura per Home Cinema - centro stanza con rotazione TV motorizzata, computerizzata e telecomandata
Home Cinema - Standing rack - Motorized and computerized revolving TV , with remote control

DECORAZIONE PANNELLO LATO "B" -DECORATION PANEL SIDE "B"

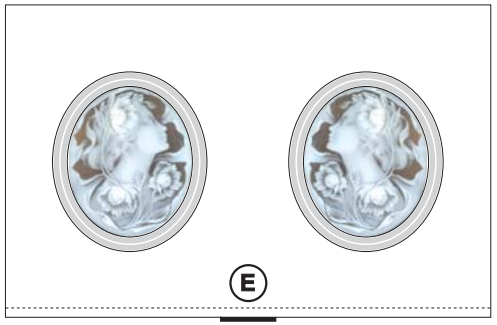

1 ovale con Cammeo
Oval with Cameo

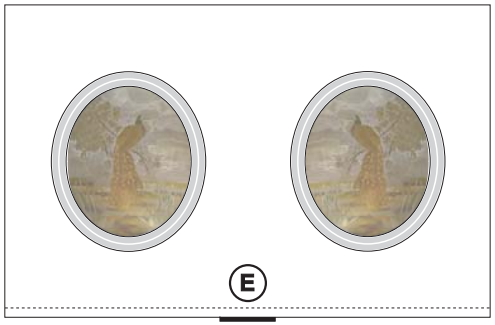

2 Ovale con Pavone Artistico oro 23/22/20/18/16/12 Carati
Oval with Artistic peacock Gold 23/22/20/18/16/12 carats

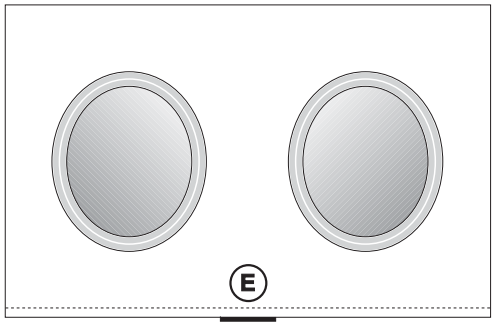

3 Ovale con specchio bisellato
Oval with bevelled mirror

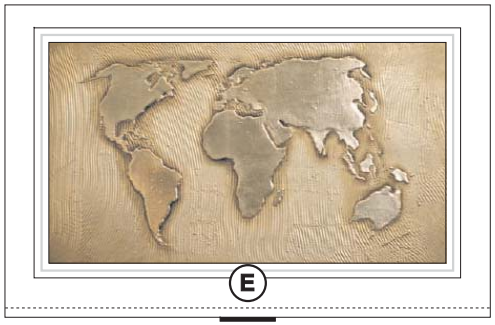

4 "Il Mondo" decorazione in rilievo in foglia platino
"The world" decoration in relief - platinum foil

A Oro/Argento Foglia/tutti i laccati
Gold/Silver foil/all laquering

C1+C+E+D Tutti i laccati opachi-Decorazioni Oro/Argento
all opaque laquering-decoration gold/silver foil

B Oro/Argento Foglia/tutti i laccati opachi
Gold/silver foil all opaque laquering

Con-with 1 EURO 14.105,30 | Con-with 2 EURO 17.718,80 | Con-with 3 EURO 13.680,70 | Con-with 4 EURO 15.221,80

A Tutti i laccati Lucidi
All Glosslaquering

C1+C+E+D Tutti i laccati opachi-Decorazioni Oro/Argento
all opaque laquering-decoration gold/silver foil

B Oro/Argento Foglia/tutti i laccati opachi
Gold/silver foil all opaque laquering

Con-with 1 EURO 14.504,60 | Con-with 2 EURO 18.117,00 | Con-with 3 EURO 14.080,00 | Con-with 4 EURO 15.620,00

A Pelle
Leather

C1+C+E+D Tutti i laccati opachi-Decorazioni Oro/Argento
all opaque laquering-decoration gold/silver foil

B Top in pelle-parti rimanenti tutti i nostri laccati opachi
Top Leather-remaining parts all opaque laquering

Con-with 1 EURO 15.500,10 | Con-with 2 EURO 19.114,70 | Con-with 3 EURO 15.075,50 | Con-with 4 EURO 16.615,50

REVOLVING HOME CINEMA - SOLO BASE

Struttura per Home Cinema - centro stanza con rotazione TV motorizzata, computerizzata e telecomandata
Home Cinema - Standing rack - Motorized and computerized revolving TV , with remote control

LATO -SIDE "A"

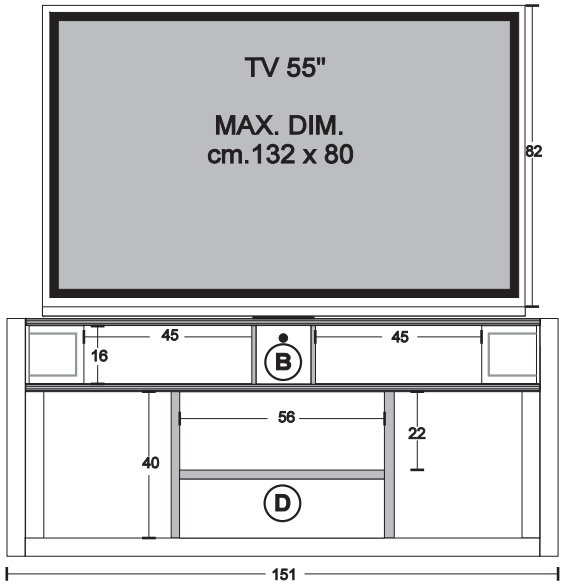

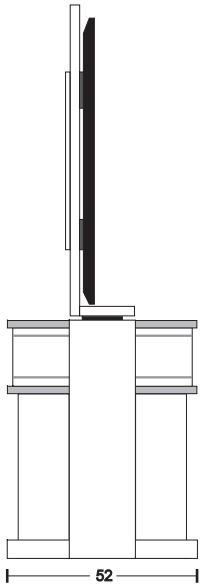

LATO -SIDE "B"

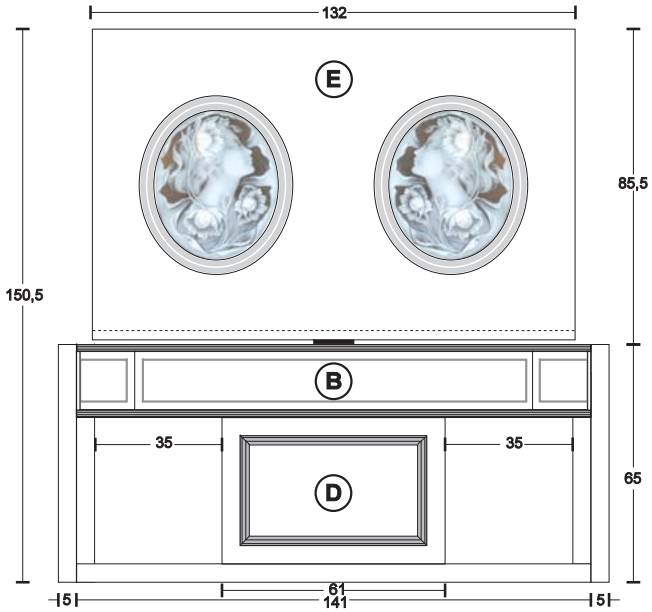

DECORAZIONE PANNELLO LATO "B" -DECORATION PANEL SIDE "B"

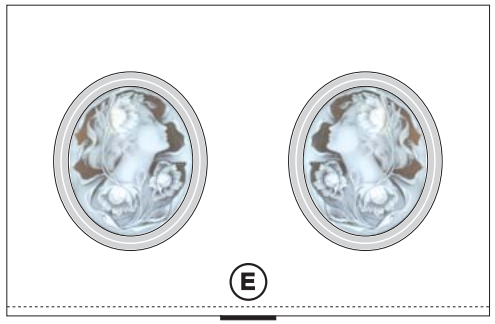

1 ovale con Cammeo
Oval with Cameo

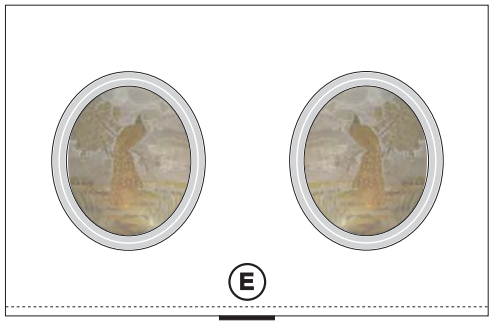

2 Ovale con Pavone Artistico oro 23/22/20/18/16/12 Carati
Oval with Artistic peacock Gold 23/22/20/18/16/12 carats

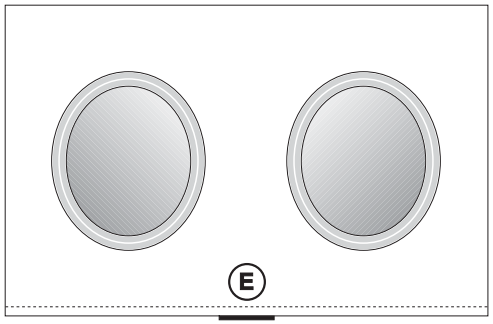

3 Ovale con specchio bisellato
Oval with bevelled mirror

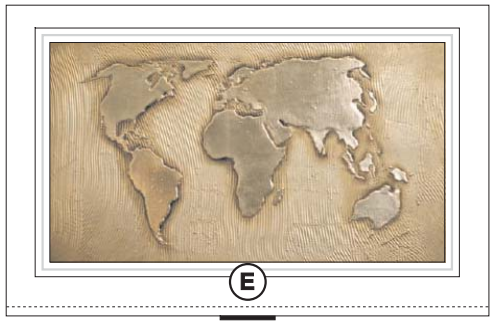

4 "Il Mondo" decorazione in rilievo in foglia platino
"The world" decoration in relief - platinum foil

E + D Tutti i laccati opachi-Decorazioni Oro/Argento
all opaque laquering-decoration gold/silver foil

B Oro/Argento Foglia/tutti i laccati opachi
Gold/silver foil all opaque laquering

Con-with 1 **EURO 10.107,90** Con-with 2 **EURO 13.719,20** Con-with 3 **EURO 9.683,30** Con-with 4 **EURO 11.224,40**

THE WALL HOME CINEMA - MODERN

Struttura per Home Cinema - a parete
Home Cinema - Wall Rack

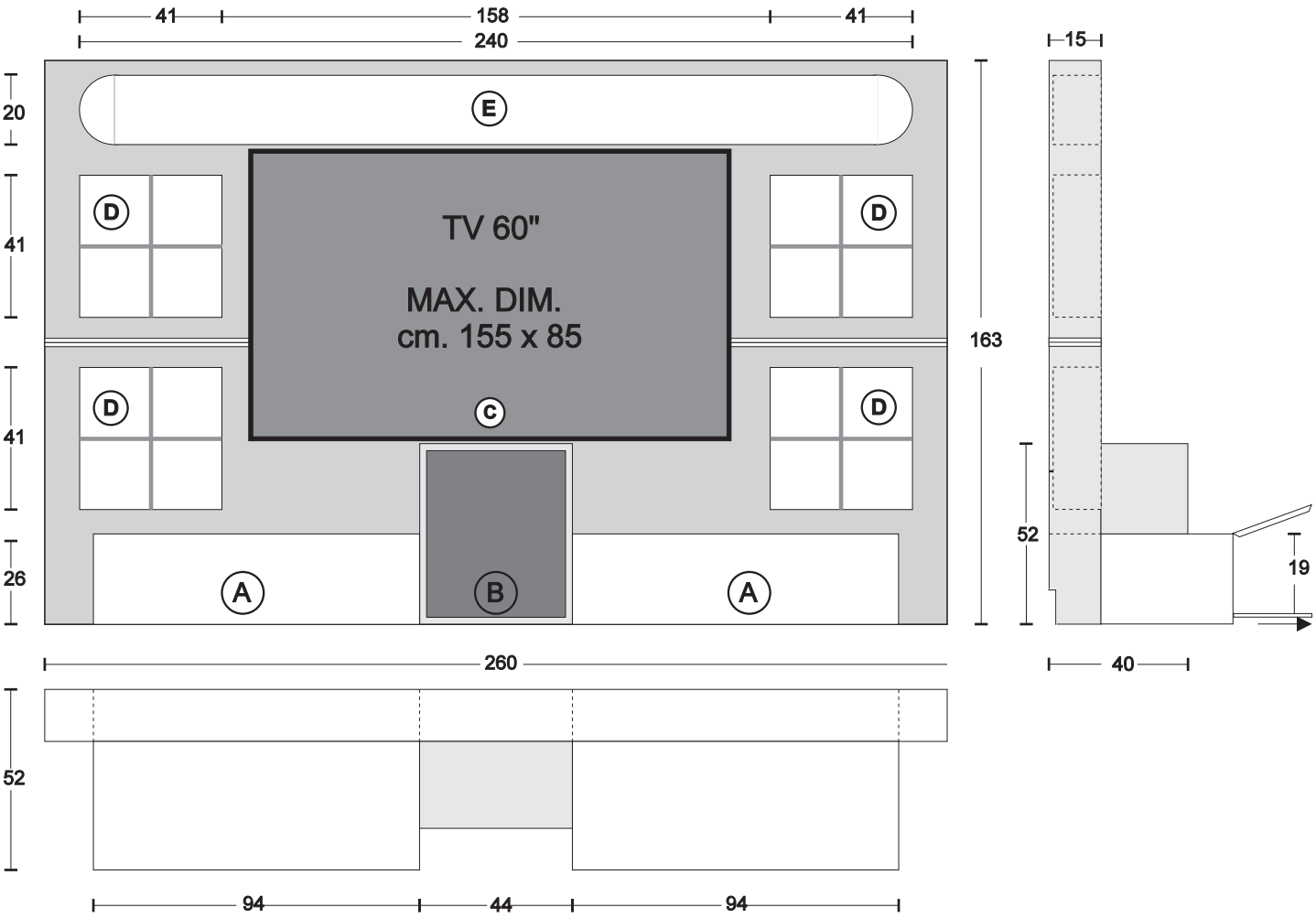

Finiture e combinazioni - Finishings and combinations

B+C	ZEBRAN	A+D+E	METALSILVER/ITALIAN COFFE	€ 7.640,60
B+C	ROVERE WENGE	A+D+E	ROSSO CARDINAL/METALSILVER	€ 7.640,60
B+C	ORO FOGLIA (gold foil)	A+D+E	METALTITANIO/BIANCO	€ 8.303,90
B+C	ARGENTO FOGLIA (silver foil)	A+D+E	METALTITANIO/BIANCO	€ 8.303,90
B+C	COCCO bianco(white) (Pelle-Leather)	A+D+E	METALTITANIO/ROSSO CARDINAL	€ 11.357,50
B+C	STRUZZO Crema (cream) (Pelle-Leather)	A+D+E	ITALIAN COFFEE/BRONZE	€ 11.357,50
B+C	SERPE TORTORA (Pelle-Leather)	A+D+E	BIANCO (white)	€ 11.357,50
B+C	SERPE TESTA MORO (Pelle-Leather)	A+D+E	ROSSO CARDINAL	€ 11.357,50
B+C	COCCO TESTA MORO (Pelle-Leather)	A+D+E	CREMA (cream)	€ 11.357,50

THE WALL HOME CINEMA - MODERN FRAME

Struttura per Home Cinema - a parete
Home Cinema - Wall Rack

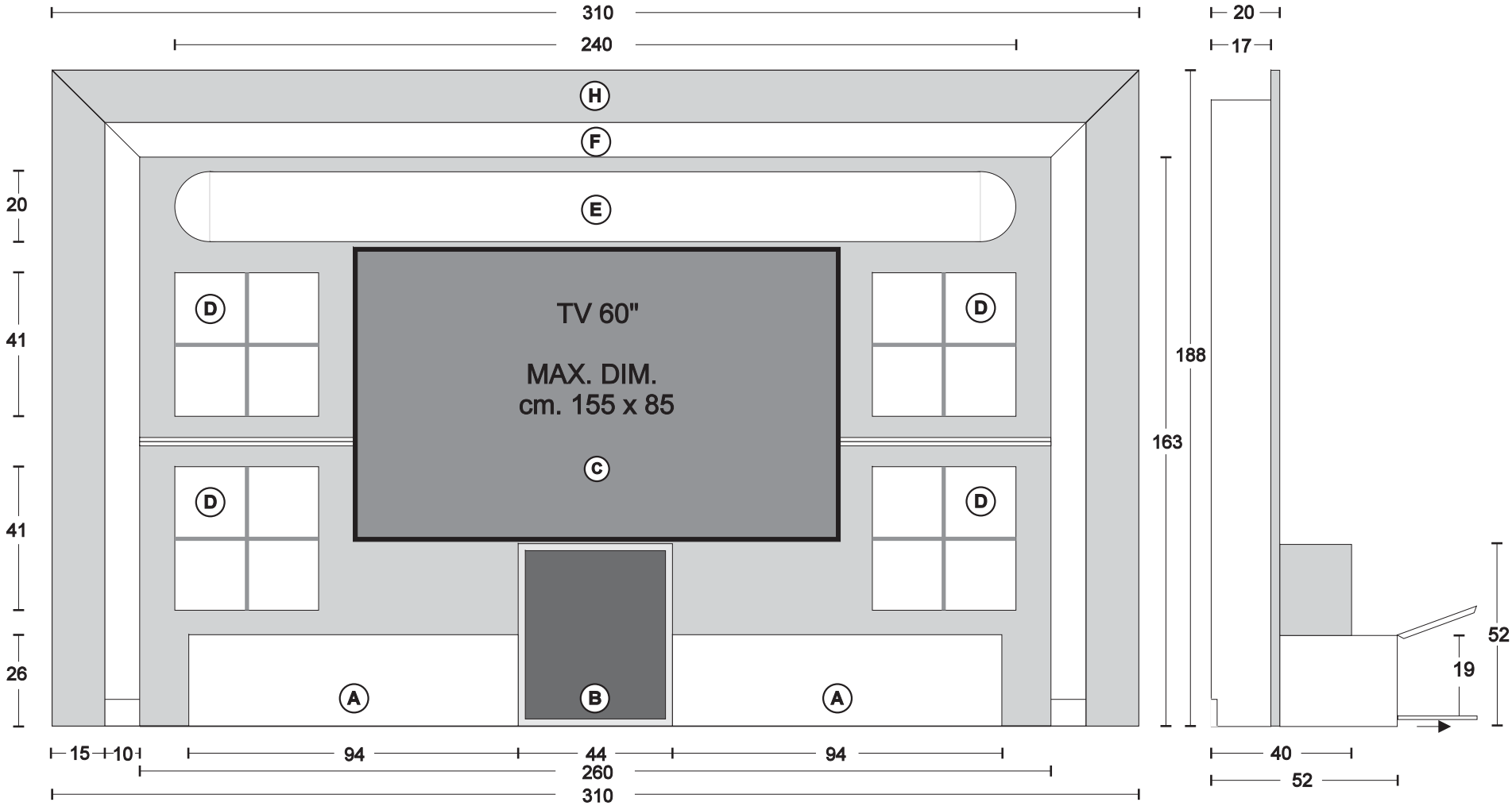

B+C+H	WENGE - GRAYWOOD - BLACKWOOD - ZEBRANO	A+D+E+F	TUTTI I LACCATI OPACHI (All laquering)	€ 11.916,30
B+C+H	ORO/ARGENTO FOGLIA (gold/silver foil)	A+D+E+F	TUTTI I LACCATI OPACHI (All laquering)	€ 12.460,80
B+C+H	BIANCO/NERO LUCIDO (gloss White/black)	A+D+E+F	TUTTI I LACCATI OPACHI (All laquering)	€ 13.510,20
B+C+H	COCCO (TESTA MORO-BIANCO) SERPE (TESTA MORO-TORTORA)STRUZZO CREMA	A+D+E+F	TUTTI I LACCATI OPACHI (All laquering)	€ 15.875,20

THE FRAME HOME CINEMA - MODERN

Struttura per Home Cinema - a parete (con luci retro-pannello diffuse)
Home Cinema - Wall Rack (with spreading back-panel lighting)

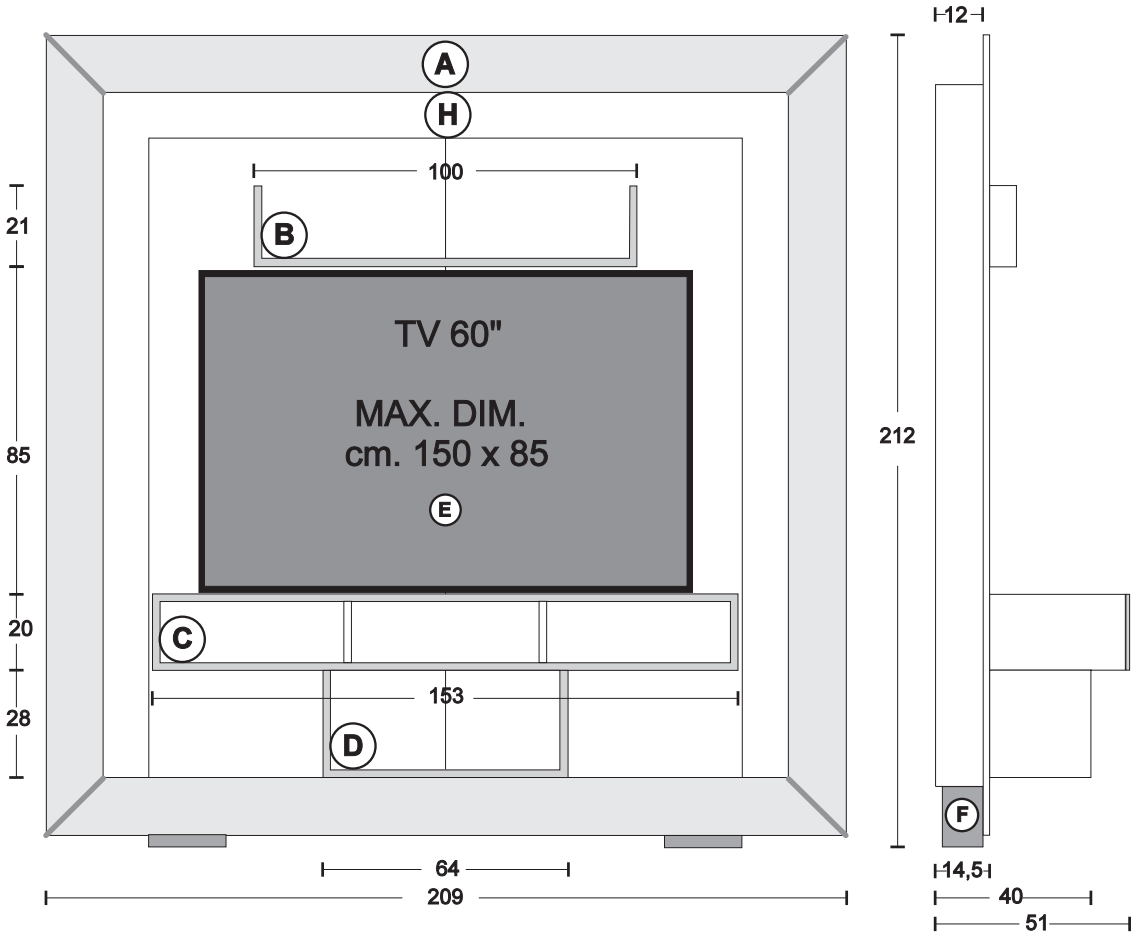

Finiture e combinazioni - Finishings and combinations

A+B+C+D	ZEBRANO		E+F	METALSILVER	H METALSILVER	€ 5.161,20
A+B+C+D	ZEBRANO		E+F	ITALIAN COFFEE	H METALSILVER	€ 5.161,20
A+B+C+D	ROVERE WENGE		E+F	ROSSO CARDINAL	H METALSILVER	€ 5.161,20
A+B+C+D	ROVERE WENGE		E+F	METALSILVER	H METALSILVER	€ 5.161,20
A+B+C+D	BLACKWOOD		E+F	METALSILVER	H METALSILVER	€ 5.161,20
A+B+C+D	GRAYWOOD		E+F	METALTITANIO	H METALSILVER	€ 5.161,20
A+C	ORO FOGLIA (gold foil)	B+D+E+F		METALTITANIO	H METALGOLD	€ 6.122,60
A+C	ARGENTO FOGLIA (silver foil)	B+D+E+F		METALTITANIO	H METALSILVER	€ 6.122,60
A+C	SERPE TESTA MORO (Pelle-Leather)	B+D+E+F		METALSILVER	H METALSILVER	€ 6.813,40
A+C	COCCO TESTA MORO (Pelle-Leather)	B+D+E+F		ROSSO CARDINAL	H METALSILVER	€ 6.813,40
A+C	STRUZZO CREMA (Pelle-Leather)	B+D+E+F		ITALIAN COFFEE	H METALSILVER	€ 6.813,40
A+C	NERO o BIANCO LUCIDO (gloss black or white) (decorazioni argento foglia - silver foil decorations)	B+D+E+F		NERO o BIANCO (black or white)	H METALSILVER	€ 6.866,20

THE FRAME CONTAINER-BAR - MODERN

Mobile con scaffali a giorno e ante scorrevoli - a parete (con led bianchi sotto piani orizzontali) ①②③④
Open wall-container, with sliding doors- Horizontal shelves enlightened by white LEDs ①②③④

-Sezione
-Section

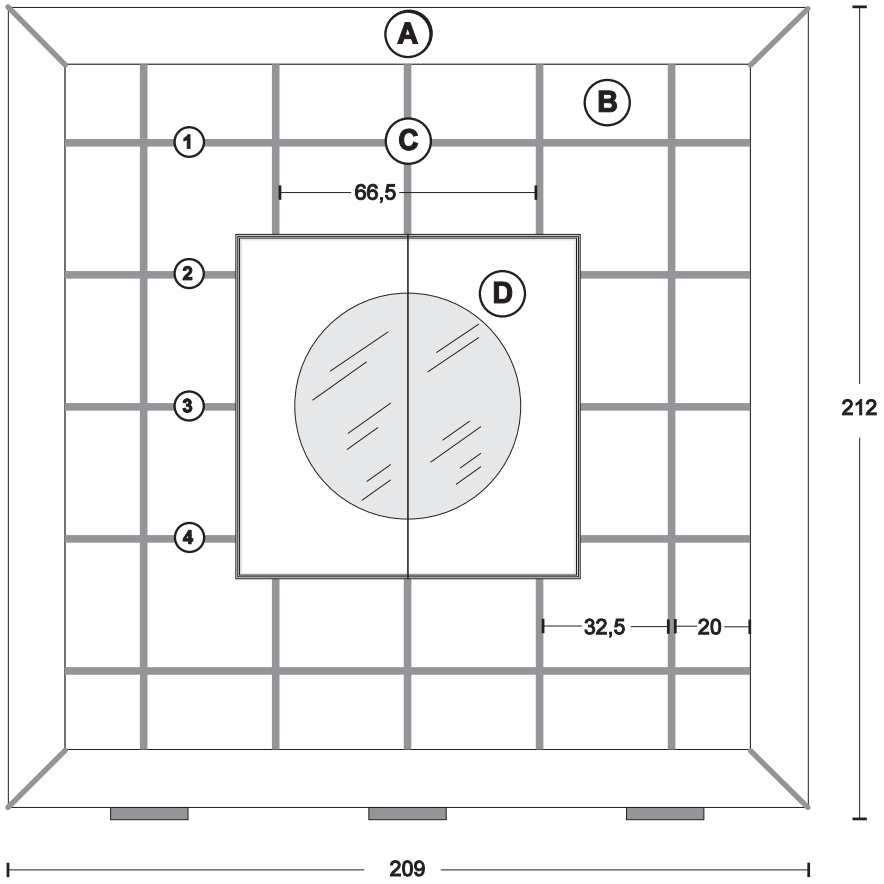

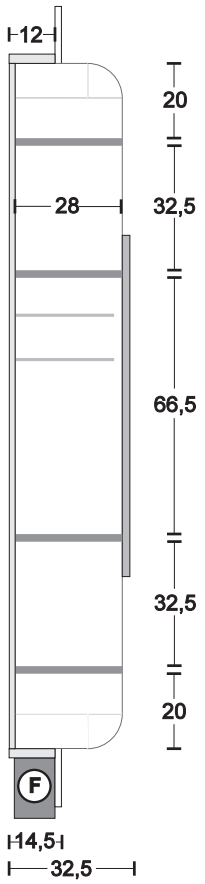

Finiture e combinazioni - Finishings and combinations

A ORO FOGLIA (gold foil)	B ORO FOGLIA (gold foi)	C+F METALBLACK	D METALBLACK	€ 9.456,70
A ORO FOGLIA L (gold foil)	B ORO FOGLIA (gold foil)	C+F CREMA (cream)	D CREMA (cream)	€ 9.456,70
A ARGENTO FOGLIA (silver foil)	B ARGEN. FOGLIA (silver foil)	C+F METALBLACK	D METALBLACK	€ 9.456,70
A ARGENTO FOGLIA (silver foil)	B ARGEN. FOGLIA (silver foil)	C+F ROSSO CARDINAL	D ROSSO CARDINAL	€ 9.456,70
A BIANCO LUCIDO (gloss white)	B ORO FOGLIA (gold foil)	C+F BIANCO (white)	D BIANCO LUCIDO (gloss white)	€ 10.139,80
A BIANCO LUCIDO (gloss white)	B ARG. FOGLIA (silver foil)	C+F BIANCO (white)	D BIANCO LUCIDO (gloss-white)	€ 10.139,80
A NERO LUCIDO (gloss black)	B ARG. FOGLIA (silver foil)	C+F NERO (black)	D NERO LUCIDO (gloss black)	€ 10.139,80
A NERO LUCIDO (gloss black)	B ORO FOGLIA (gold foil)	C+F NERO (black)	D NERO LUCIDO (gloss black)	€ 10.139,80
A COCCO TESTA MORO (Pelle-Leather)	B ORO FOGLIA (gold foil)	C+F ROSSO CARDINAL	D ROSSO CARDINAL	€ 10.656,80
A STRUZZO CREMA (Pelle-Leather)	B ORO FOGLIA (gold foil)	C+F ITALIAN COFFEE	D ITALIAN COFFEE	€ 10.656,80

THE FRAME "BIG MIRROR" - MODERN

Specchio a parete completo di consolle a 2 cassetti e vano a giorno - led bianchi perimetrali - bolle perimetrali su specchio
Wall-mirror with 2-drawer-consolle and open compartment- white leds on perimeter- bubbles on mirror border

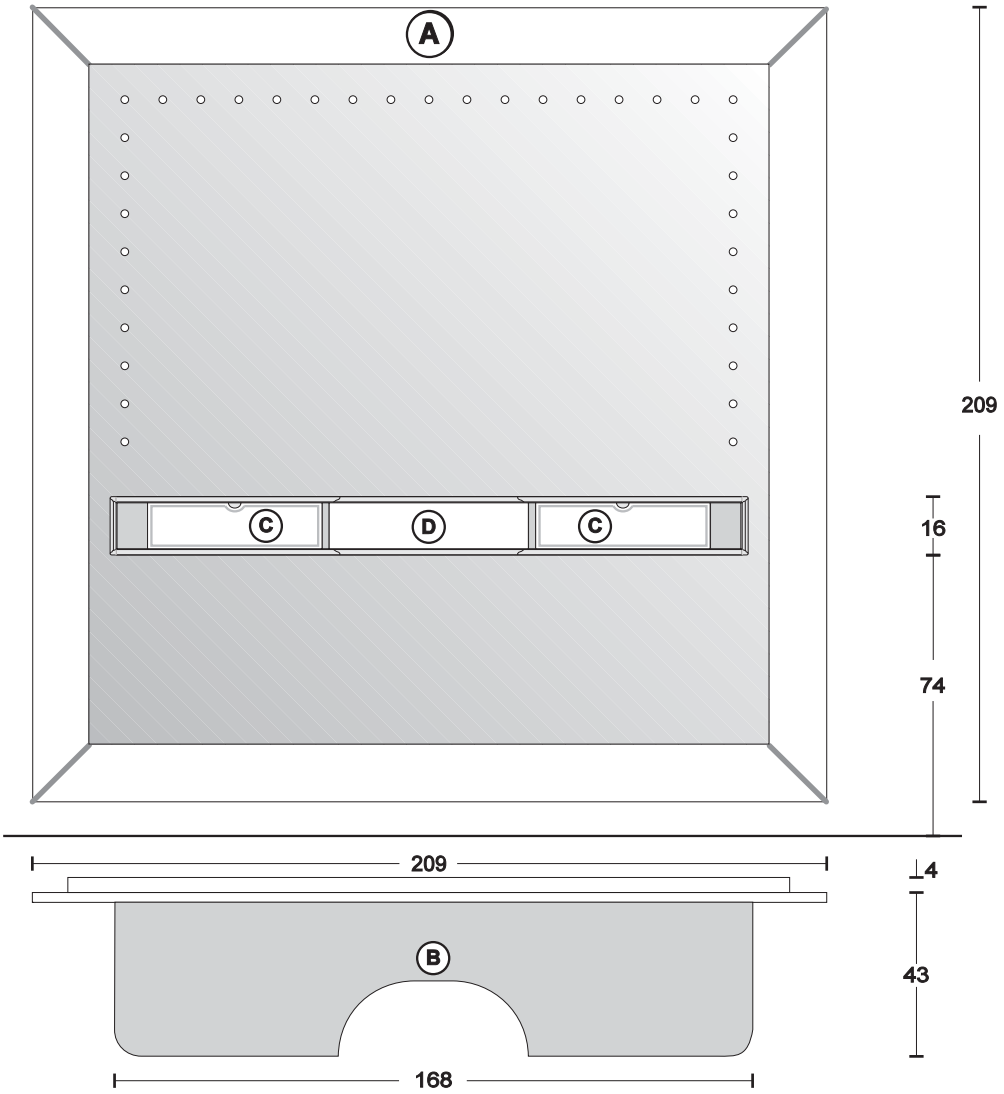

Finiture e combinazioni - Finishings and combinations

A ORO FOGLIA (gold foil)	B ORO FOGLIA (gold foi)	C METALBLACK	D METALBLACK	€ 6.708,90
A ORO FOGLIA (gold foil)	B ORO FOGLIA (gold foil)	C CREMA (cream)	D CREMA (cream)	€ 6.708,90
A ARGENTO FOGLIA (silver foil)	B ARGEN. FOGLIA (silver foil)	C METALBLACK	D METALBLACK	€ 6.708,90
A ARGENTO FOGLIA (silver foil)	B ARGEN. FOGLIA (silver foil)	C ROSSO CARDINAL	D ROSSO CARDINAL	€ 6.708,90
A BIANCO LUCIDO (gloss white)	B ORO FOGLIA (gold foil)	C BIANCO LUCIDO (gloss white)	D BIANCO (white)	€ 7.261,10
A BIANCO LUCIDO (gloss white)	B ARG. FOGLIA (silver foil)	C BIANCO LUCIDO (gloss-white)	D BIANCO (white)	€ 7.261,10
A NERO LUCIDO (gloss black)	B ARG. FOGLIA (silver foil)	C NERO LUCIDO (gloss black)	D NERO (black)	€ 7.261,10
A NERO LUCIDO (gloss black)	B ORO FOGLIA (gold foil)	C NERO LUCIDO (gloss black)	D NERO (black)	€ 7.261,10
A COCCO TESTA MORO (Pelle-Leather)	B ROSSO CARDINAL	C COCCO TESTA MORO (Pelle-Leather)	D ROSSO CARDINAL	€ 7.862,80
A STRUZZO CREMA (Pelle-Leather)	B ITALIAN COFFEE	C STRUZZO CREMA (Pelle-Leather)	D ITALIAN COFFEE	€ 7.862,80

STAR GATE - MODERN

Struttura per Home Cinema - a parete (con luci retro-pannello diffuse)
Home Cinema - Wall Rack (with spreading back-panel lighting)

-Sezione
-Section

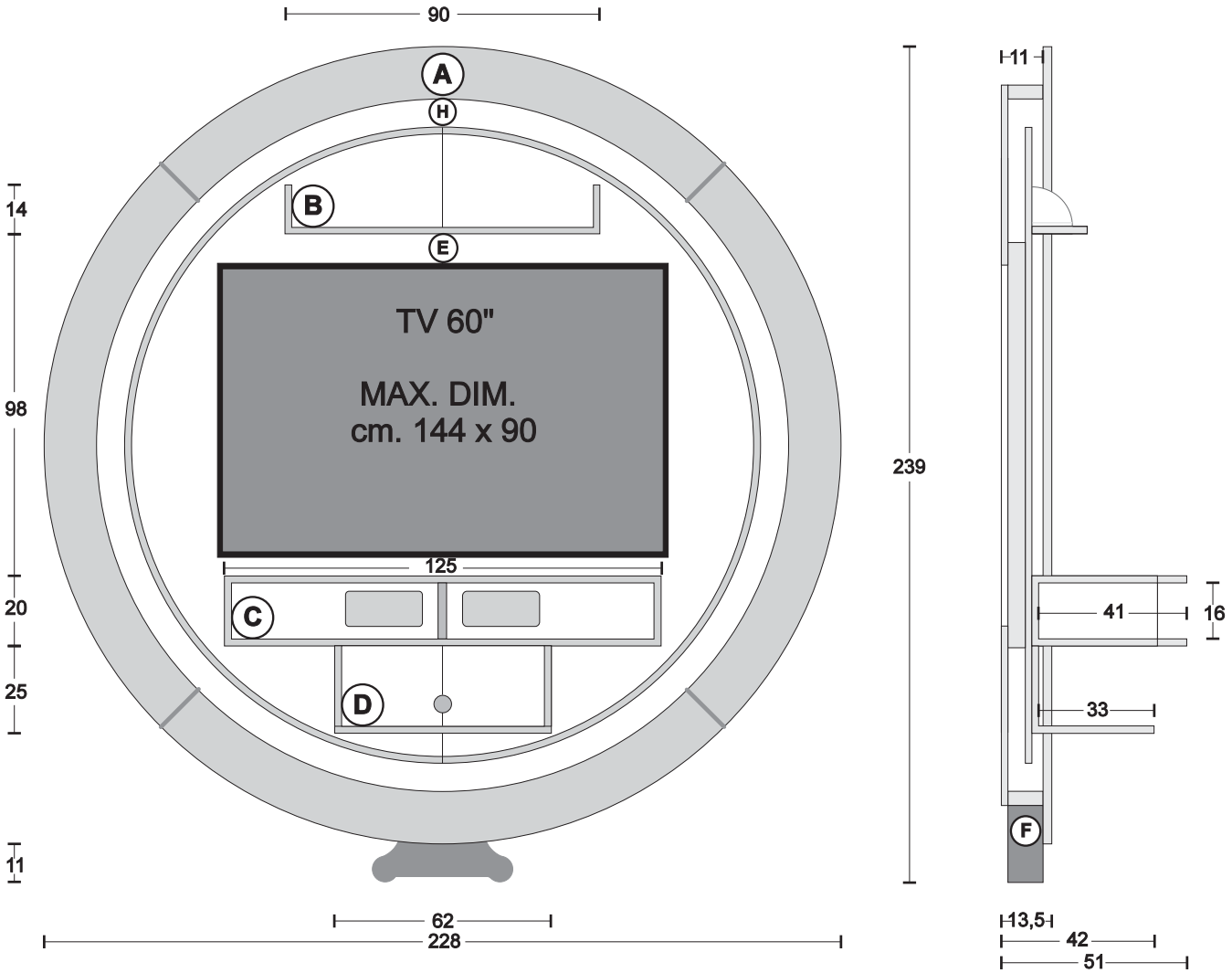

Finiture e combinazioni - Finishings and combinations

A+B+C+D	ROVERE WENGE		E+F	METALSILVER	H	METALSILVER	€ 7.741,80
A+B+C+D	ROVERE WENGE		E+F	ROSSO CARDINAL	H	METALSILVER	€ 7.741,80
A+C	ORO FOGLIA (gold foil)(decorazioni oro foglia - gold foli decorations)	B+D+E+F	METALTITANIO		H	METALGOLD	€ 8.412,80
A+C	ARGENTO FOGLIA (silver foil)(decorazioni argento foglia - silver foil decorations)	B+D+E+F	ROSSO CARDINAL		H	METALSILVER	€ 8.412,80
A+C	ARGENTO FOGLIA (silver foil)(decorazioni argento foglia - silver foil decorations)	B+D+E+F	METALTITANIO		H	METALSILVER	€ 8.412,80
A+C	COCCO TESTA MORO (Pelle-Leather) (decorazioni oro foglia - gold foil decorations)	B+D+E+F	ITALIAN COFFEE		H	METALGOLD	€ 9.082,70
A+C	COCCO TESTA MORO (Pelle-Leather)	B+D+E+F	ROSSO CARDINAL		H	METALSILVER	€ 9.082,70
A+C	STRUZZO CREMA (Pelle-Leather)(decorazioni oro foglia - gold foil decorations)	B+D+E+F	ITALIAN COFFEE		H	METALGOLD	€ 9.082,70
A+C	SERPE TESTA MORO (Pelle-Leather)(decorazioni argento foglia - silver foil decorations)	B+D+E+F	METALSILVER		H	METALSILVER	€ 9.082,70
A+C	NERO o BIANCO LUCIDO (gloss black or white) (decorazioni argento foglia - silver foil decorations)	B+D+E+F	NERO o BIANCO (black or white)		H	METALSILVER	€ 9.234,50

STAR GATE CONTAINER-BAR - MODERN

Mobile con scaffali a giorno e ante scorrevoli - a parete (con led bianchi sotto piani orizzontali) ①②③④
Open wall-container, with sliding doors- Horizontal shelves enlightened by white LEDs ①②③④

-Sezione
-Section

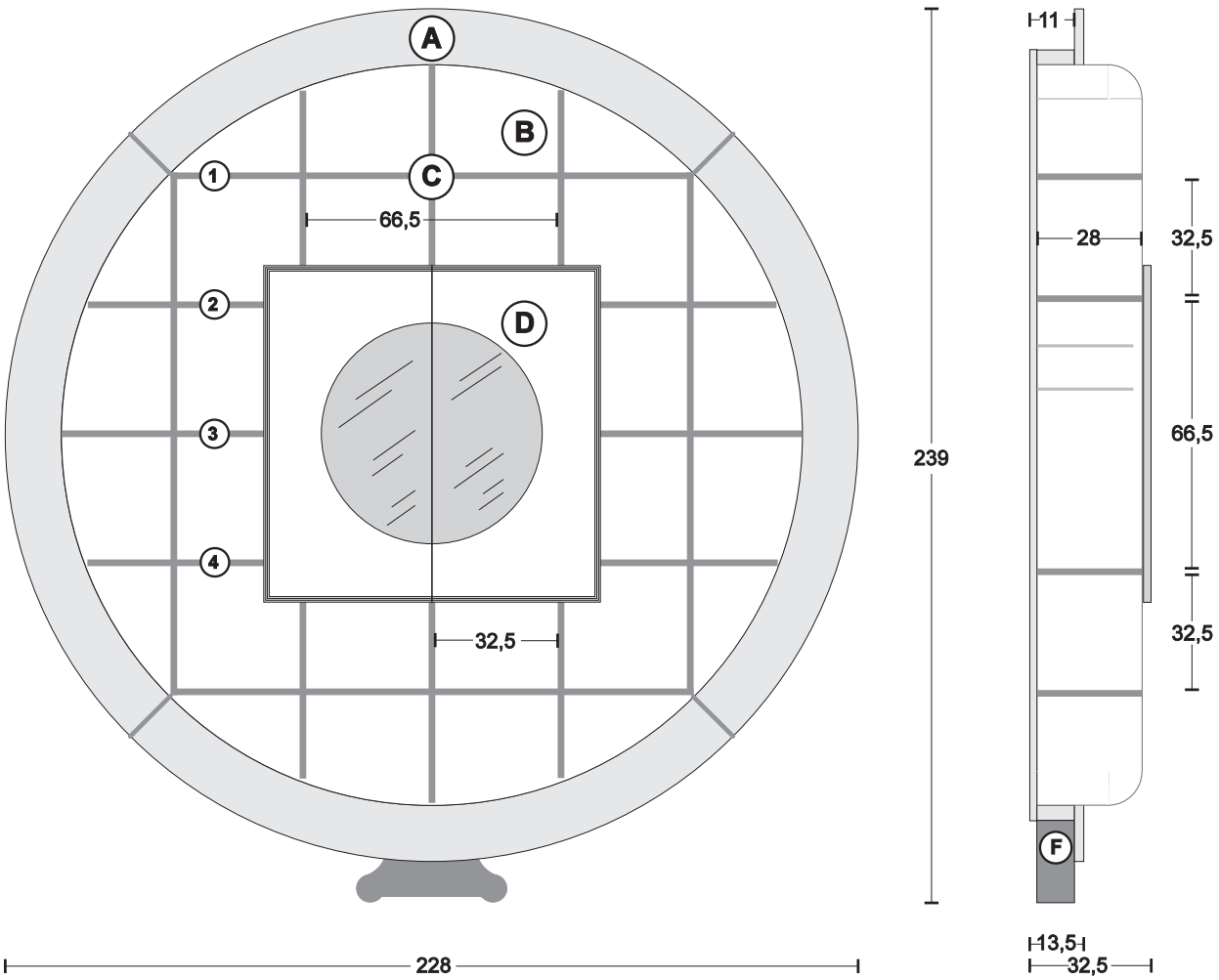

Finiture e combinazioni - Finishings and combinations

Ⓐ ORO FOGLIA (gold foil)	Ⓑ ORO FOGLIA (gold foil)	Ⓒ+Ⓕ METALBLACK	Ⓓ METALBLACK	€ 12.020,80
Ⓐ ORO FOGLIA (gold foil)	Ⓑ ORO FOGLIA (gold foil)	Ⓒ+Ⓕ CREMA (cream)	Ⓓ CREMA (cream)	€ 12.020,80
Ⓐ ARGENTO FOGLIA (silver foil)	Ⓑ ARGEN. FOGLIA (silver foil)	Ⓒ+Ⓕ METALBLACK	Ⓓ METALBLACK	€ 12.020,80
Ⓐ ARGENTO FOGLIA (silver foil)	Ⓑ ARGEN. FOGLIA (silver foil)	Ⓒ+Ⓕ ROSSO CARDINAL	Ⓓ ROSSO CARDINAL	€ 12.020,80
Ⓐ BIANCO LUCIDO (gloss white)	Ⓑ ORO FOGLIA (gold foil)	Ⓒ+Ⓕ BIANCO (white)	Ⓓ BIANCO LUCIDO (gloss white)	€ 12.369,50
Ⓐ BIANCO LUCIDO (gloss white)	Ⓑ ARG. FOGLIA (silver foil)	Ⓒ+Ⓕ BIANCO (white)	Ⓓ BIANCO LUCIDO (gloss-white)	€ 12.369,50
Ⓐ NERO LUCIDO (gloss black)	Ⓑ ARG. FOGLIA (silver foil)	Ⓒ+Ⓕ NERO (black)	Ⓓ NERO LUCIDO (gloss black)	€ 12.369,50
Ⓐ NERO LUCIDO (gloss black)	Ⓑ ORO FOGLIA (gold foil)	Ⓒ+Ⓕ NERO (black)	Ⓓ NERO LUCIDO (gloss black)	€ 12.369,50
Ⓐ COCCO TESTA MORO (Pelle-Leather)	Ⓑ ORO FOGLIA (gold foil)	Ⓒ+Ⓕ ROSSO CARDINAL	Ⓓ ROSSO CARDINAL	€ 13.153,80
Ⓐ STRUZZO CREMA (Pelle-Leather)	Ⓑ ORO FOGLIA (gold foil)	Ⓒ+Ⓕ ITALIAN COFFEE	Ⓓ ITALIAN COFFEE	€ 13.153,80

STAR GATE "BIG MIRROR" - MODERN

Specchio a parete completo di consolle a 2 cassetti e vano a giorno - led bianchi perimetrali - bolle perimetrali su specchio
Wall-mirror with 2-drawer-consolle and open compartment- white leds on perimeter- bubbles on mirror border

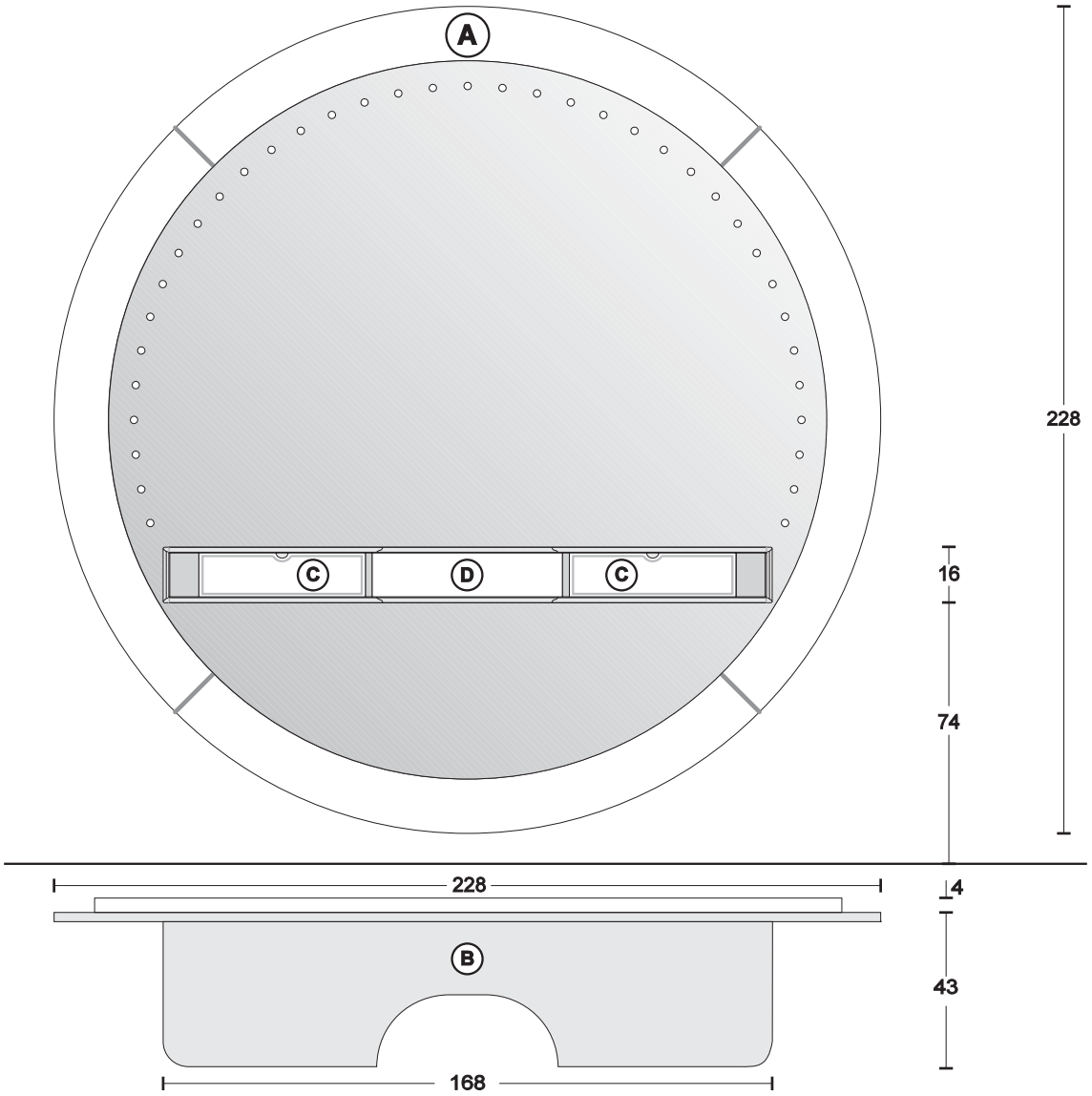

Finiture e combinazioni - Finishings and combinations

A ORO FOGLIA (gold foil)	B ORO FOGLIA (gold foil)	C METALBLACK	D METALBLACK	€ 7.785,80
A ORO FOGLIA (gold foil)	B ORO FOGLIA (gold foil)	C CREMA (cream)	D CREMA (cream)	€ 7.785,80
A ARGENTO FOGLIA (silver foil)	B ARGEN. FOGLIA (silver foil)	C METALBLACK	D METALBLACK	€ 7.785,80
A ARGENTO FOGLIA (silver foil)	B ARGEN. FOGLIA (silver foil)	C ROSSO CARDINAL	D ROSSO CARDINAL	€ 7.785,80
A BIANCO LUCIDO (gloss white)	B ORO FOGLIA (gold foil)	C BIANCO LUCIDO (gloss white)	D BIANCO (white)	€ 8.354,50
A BIANCO LUCIDO (gloss white)	B ARG. FOGLIA (silver foil)	C BIANCO LUCIDO (gloss-white)	D BIANCO (white)	€ 8.354,50
A NERO LUCIDO (gloss black)	B ARG. FOGLIA (silver foil)	C NERO LUCIDO (gloss black)	D NERO (black)	€ 8.354,50
A NERO LUCIDO (gloss black)	B ORO FOGLIA (gold foil)	C NERO LUCIDO (gloss black)	D NERO (black)	€ 8.354,50
A COCCO TESTA MORO (Pelle-Leather)	B ROSSO CARDINAL	C COCCO TESTA MORO (Pelle-Leather)	D ROSSO CARDINAL	€ 9.102,50
A STRUZZO CREMA (Pelle-Leather)	B ITALIAN COFFEE	C STRUZZO CREMA (Pelle-Leather)	D ITALIAN COFFEE	€ 9.102,50

FRAME - 120 MODERN

Elemento porta CD-DVD a parete
Wall CD-DVD rack

cornice - frame:NOCE-WALLNUT (interno-inside:CORDA 4)	**€ 1.394,80**
cornice - frame :ROVERE SBIANCATO (interno-inside:METALSILVER)	**€ 1.394,80**
cornice - frame :ROVERE WENGE' (interno-inside:METALSILVER)	**€ 1.394,80**
cornice - frame:ZEBRAN (interno-inside:METALPIOMBO)	**€ 1.394,80**
cornice - frame:BLACKWOOD (interno-inside:METALSILVER)	**€ 1.394,80**
cornice - frame:GRAYWOOD (interno-inside:METALSILVER	**€ 1.394,80**
cornice - frame:Bianco/Nero Lucido Gloss White/Black (interno-inside:Bianco/Nero-White/Black)	**€ 2.118,60**
cornice - frame:ORO/ARGENTO FOGLIA GOLD/SILVER FOIL (interno-inside:METALPIOMBO)	**€ 1.661,00**
cornice - frame:(pelle-leather). COCCO TESTA MORO - SERPE TESTA MORO (interno-inside:ROSSO CARDINAL)	**€ 2.577,30**
cornice - frame:(pelle-leather)STRUZZO CREMA (interno-inside:ITALIAN COFFEE)	**€ 2.577,30**
cornice - frame:CRYSTAL STONES su laccatura - on lacquering:METALTITANIO (interno-inside:METALSILVER)	**€ 2.577,30**
cornice - frame:CRYSTAL STONES su laccatura - on lacquering:METALSILVER (interno-inside:METALPIOMBO)	**€ 2.577,30**

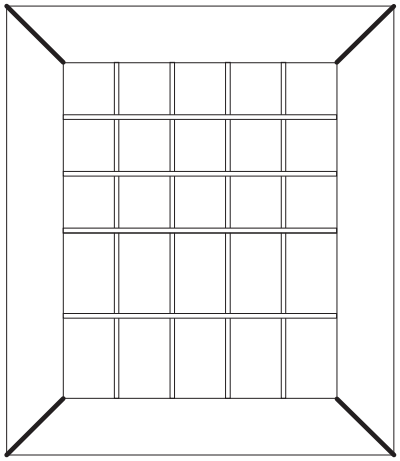

art.: F12-3C3V
234 CD + 90 DVD

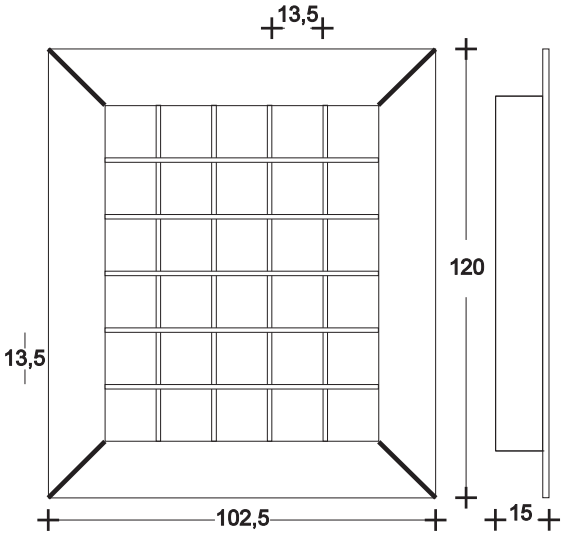

art.: F12-6C
390 CD

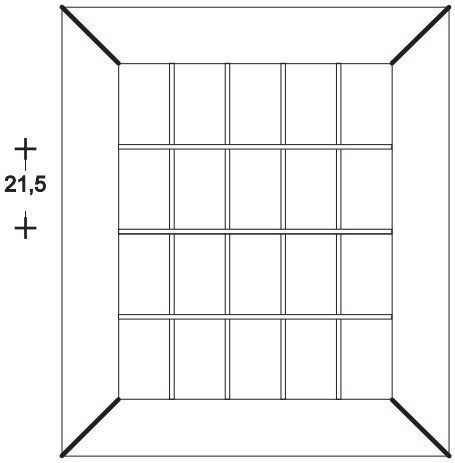

art.:.F12-4V
180 DVD

45 DEGREES

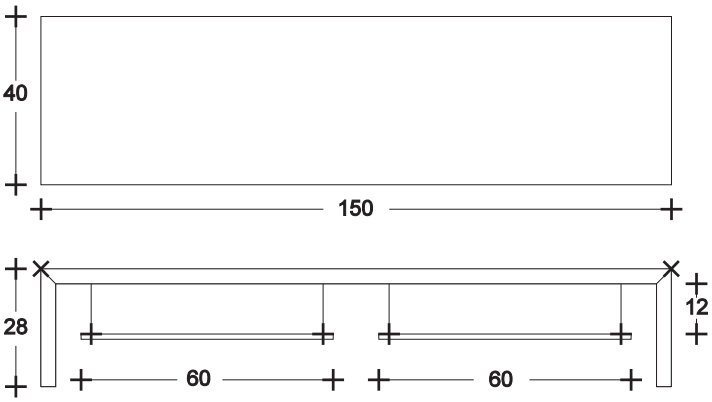

Supporter per apparecchi elettronici
Supporter for electronic equipment

METALSILVER	**€ 860,20**
METALPIOMBO	**€ 860,20**
METALTITANIO	**€ 860,20**
METALBLACK	**€ 860,20**
ROSSO CARDINAL	**€ 860,20**
ITALIAN COFFEE	**€ 860,20**

FRAME - 214 MODERN

Elemento porta CD-DVD a parete
Wall CD-DVD rack

cornice - frame:NOCE-WALLNUT (interno-inside:CORDA 4)	**€ 2.446,40**
cornice - frame:ROVERE SBIANCATO (interno-inside:METALSILVER)	**€ 2.446,40**
cornice - frame:ROVERE WENGE' (interno-inside:METALSILVER)	**€ 2.446,40**
cornice - frame:ZEBRAN (interno-inside:METALPIOMBO)	**€ 2.446,40**
cornice - frame:BLACKWOOD. (interno-inside:METALSILVER)	**€ 2.446,40**
cornice - frame:GRAYWOOD (interno-inside:METALSILVER)	**€ 2.446,40**
cornice - frame:Bianco/Nero Lucido Gloss White/Black (interno-inside:Bianco/Nero-White/Black)	**€ 3.417,70**
cornice - frame:ORO/ARGENTO FOGLIA GOLD/SILVER FOIL (interno-inside:METALPIOMBO)	**€ 2.770,90**
cornice - frame:(pelle-leather) COCCO TESTA MORO - SERPE TESTA MORO (interno-inside:ROSSO CARDINAL)	**€ 3.914,90**
cornice - frame:(pelle-leather) STRUZZO CREMA (interno-inside:ITALIAN COFFEE)	**€ 3.914,90**
cornice - frame:CRYSTAL STONES su laccatura - on lacquering:METALTITANIO (interno-inside:METALSILVER)	**€ 3.914,90**
cornice - frame:CRYSTAL STONES su laccatura - on lacquering:METALSILVER (interno-inside:METALPIOMBO)	**€ 3.914,90**

art. F214-9C2V
585 CD+90 DVD

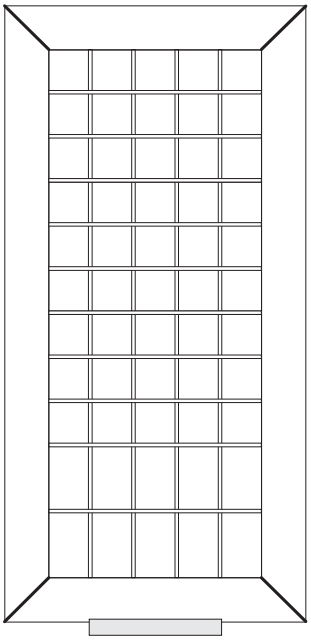

art. F214-6C4V
390 CD+180 DVD

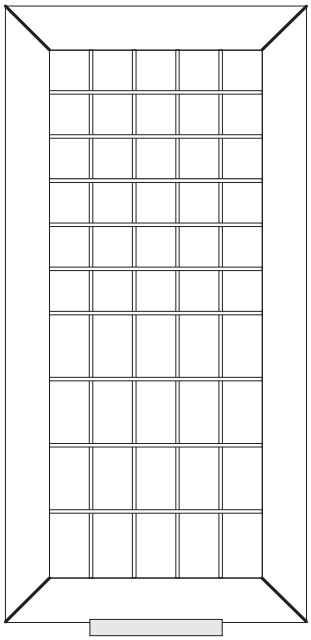

art. F214-12C
780 CD

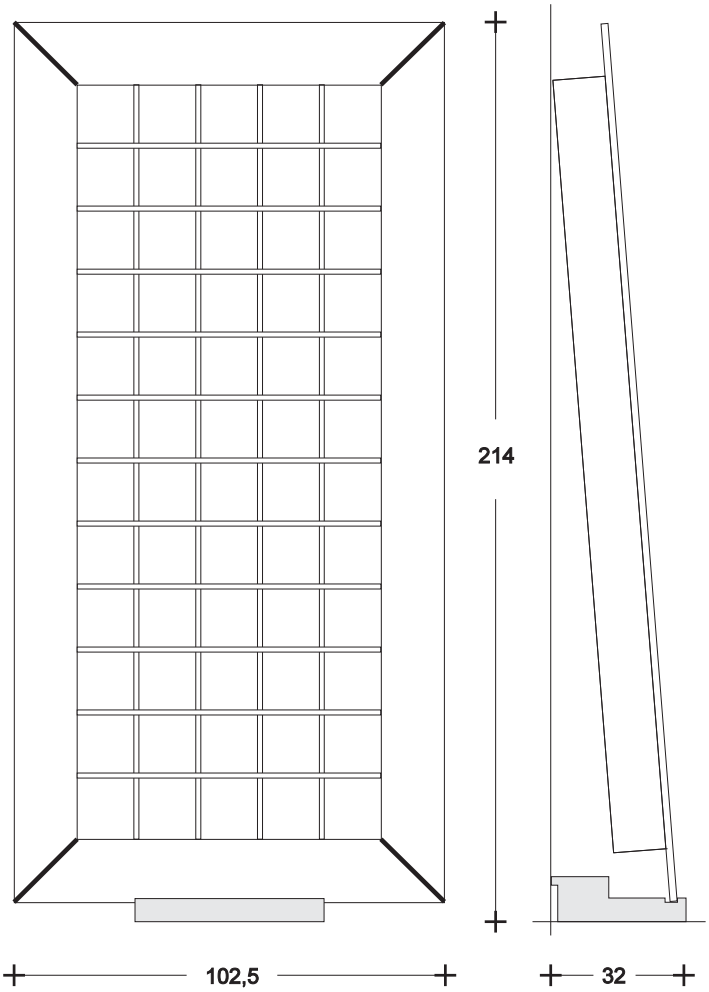

art. F214-3C6V
234 CD+270 DVD

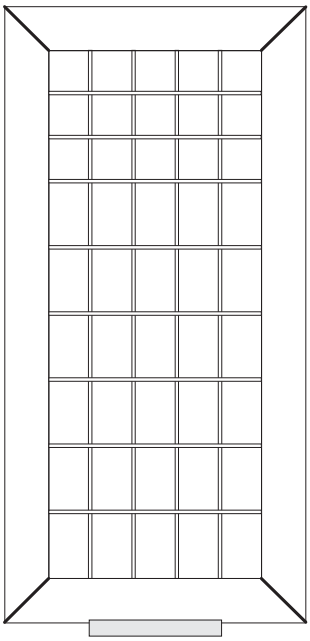

art. F214-8V
360 DVD

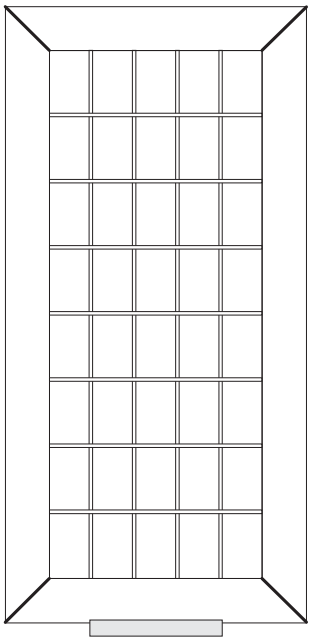

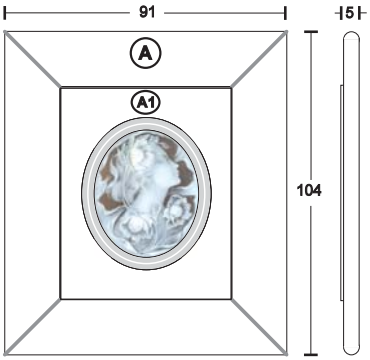

CAMMEO

Ovale con Cammeo (Sinistro o destro)
Oval with Cameo (Left or Right)

Ⓐ Oro/Argento Foglia/tutti i laccati-Gold/Silver foil/all laquering
Ⓐ1 tutti i laccati opachi-all opaque laquering **€ 1.567,50**

Ⓐ Tutte le nostre pelli da rivestimento-All our Leather covering
Ⓐ1 tutti i laccati opachi-all opaque laquering **€ 2.642,20**

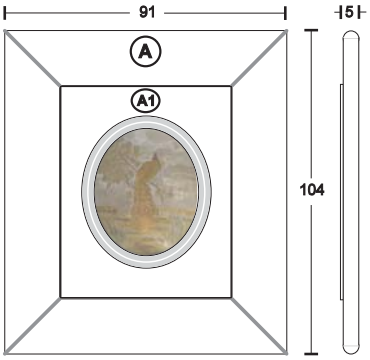

PAVONE

Ovale con Pavone Artistico oro 23/22/20/18/16/12 Carati (Sinistro o destro)
Oval with Artistic peacock Gold 23/22/20/18/16/12 carats (Left or Right)

Ⓐ Oro/Argento Foglia/tutti i laccati-Gold/Silver foil/all laquering
Ⓐ1 tutti i laccati opachi-all opaque laquering **€ 3.377,00**

Ⓐ Tutte le nostre pelli da rivestimento-All our Leather covering
Ⓐ1 tutti i laccati opachi-all opaque laquering **€ 4.440,70**

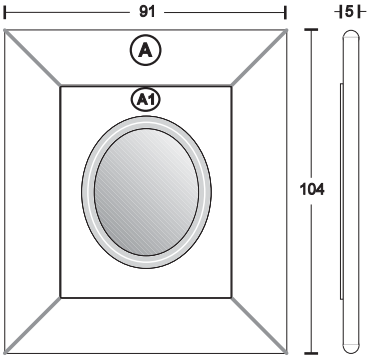

OVAL MIRROR

Ovale con specchio bisellato
Oval with bevelled mirror

Ⓐ Oro/Argento Foglia/tutti i laccati-Gold/Silver foil/all laquering
Ⓐ1 tutti i laccati opachi-all opaque laquering **€ 1.368,40**

Ⓐ Tutte le nostre pelli da rivestimento-All our Leather covering
Ⓐ1 tutti i laccati opachi-all opaque laquering **€ 2.431,00**

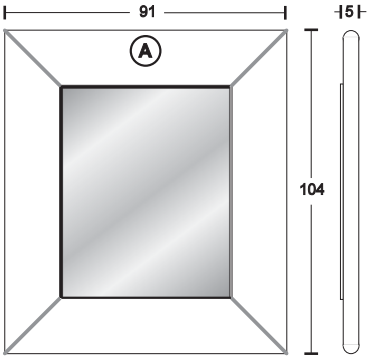

MIRROR

Specchio anticato o normale
Antique mirror or standard

Ⓐ Oro/Argento Foglia/tutti i laccati-
Gold/Silver foil/all laquering **€ 1.394,80**

Ⓐ Tutte le nostre pelli da rivestimento
All our Leather covering **€ 2.457,40**

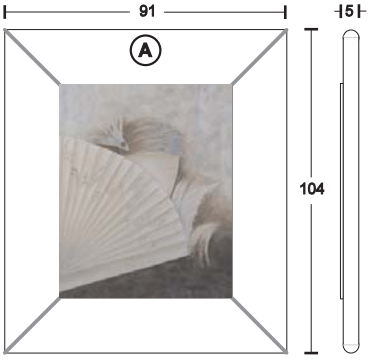

THE FAN

Dipinto materico "Donna con Ventaglio" (Sinistro o destro)
Hand-made Materic painting "Donna con Ventaglio" (Left or Right)

Ⓐ Tutti i laccati opachi-Decorazioni Oro/Argento
all opaque laquering-decoration gold/silver foil **€ 1.675,30**

Ⓐ Nero/Bianco Lucido-Decori Oro/ argento
Gloss Black/White-Gold/Silver Foil Decorations **€ 2.750,00**

CIAIKA -170 -MODERN

Tavolino porta CD/DVD per 800 Cd (e/o 378 DVD)
Coffee table CD/DVD rack for 800 CD (and or 378 DVD

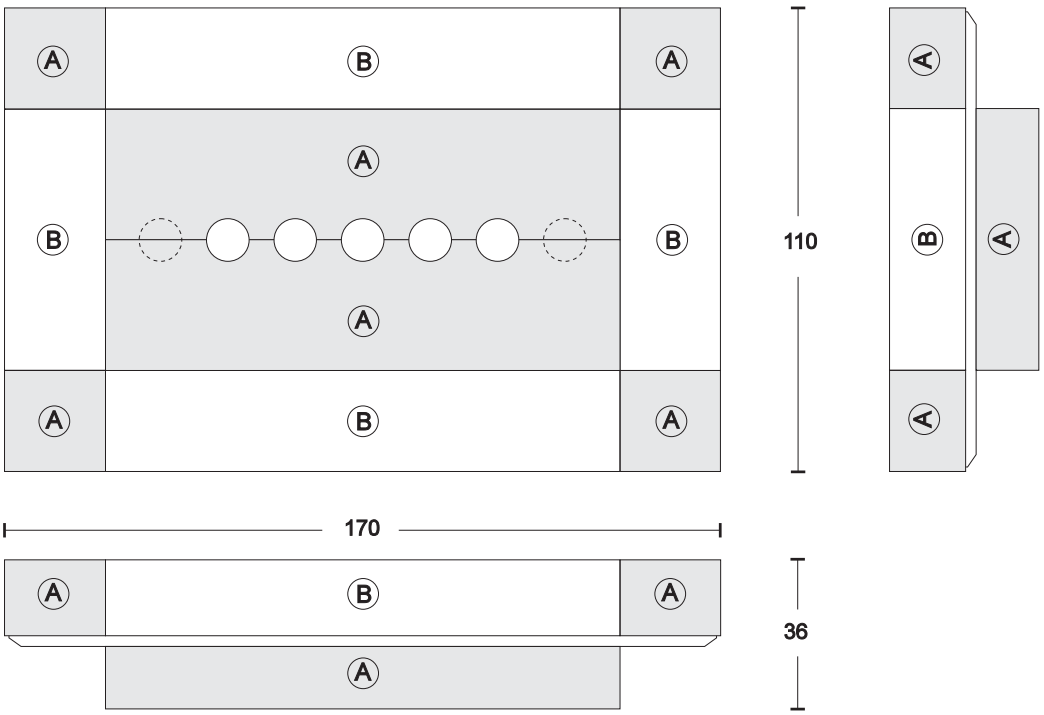

Finiture esterne standard
Outside Standard finishings

A CORDA 4	B ZEBRANO	€ 4.928,00
A METALSILVER	B ROVERE WENGE'	€ 4.928,00
A METALPIOMBO	B ROVERE SBIANCATO	€ 4.928,00
A METALBLACK	B BIANCO/WHITE	€ 4.928,00
A METALTITANIO	B METALSILVER	€ 4.928,00
A METALSILVER	B BLACKWOOD	€ 4.928,00
A METALSILVER	B GRAYWOOD	€ 4.928,00
A BORDEAUX	B ZEBRANO	€ 4.928,00
A ITALIAN coffee	B ZEBRANO	€ 4.928,00
A ROSSO cardinal	B SERPE TESTA MORO	€ 6.084,10
A ROSSO cardinal	B COCCO TESTA MORO	€ 6.084,10
A ITALIAN coffee	B STRUZZO CREMA	€ 6.084,10
A METALTITANIO	B ORO/argento FOGLIA	€ 6.084,10
A Argento Foglia Silver Foil	B Bianco/Nero Lucido (gloss white/black)	€ 6.706,70

Finitura superfici interne: METALSILVER
Finishings of inside surface: METALSILVER

CIAIKA - 110 - MODERN

Tavolino porta CD/DVD per 490 Cd (e/o 218 DVD)
Coffe table CD/DVD rack for 490 CD (and or 218 DVD)

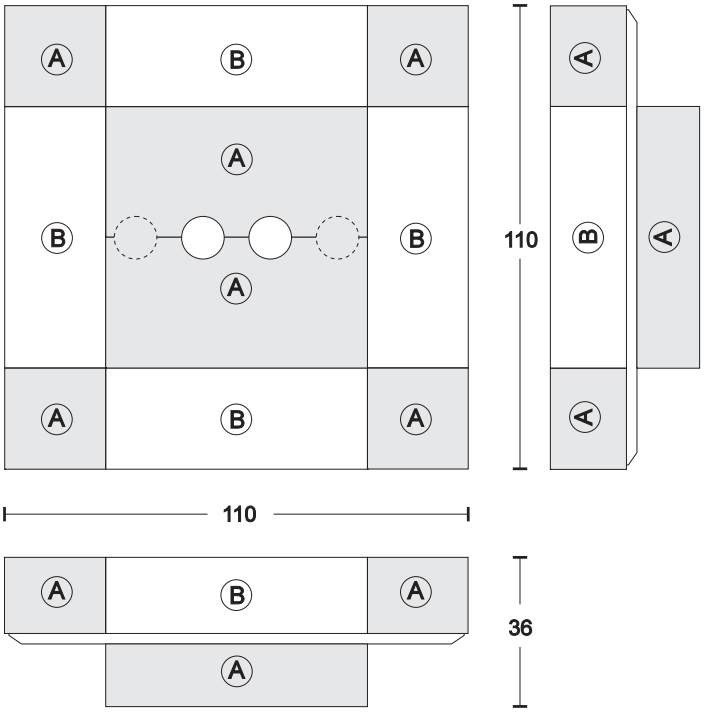

Finiture esterne standard
Outside Standard finishings

A CORDA 4	B ZEBRANO	€ 4.038,10
A METALSILVER	B ROVERE WENGE'	€ 4.038,10
A METALPIOMBO	B ROVERE SBIANCATO	€ 4.038,10
A METALBLACK	B BIANCO/WHITE	€ 4.038,10
A METALTITANIO	B METALSILVER	€ 4.038,10
A METALSILVER	B BLACKWOOD	€ 4.038,10
A METALSILVER	B GRAYWOOD	€ 4.038,10
A BORDEAUX	B ZEBRANO	€ 4.038,10
A ITALIAN coffee	B ZEBRANO	€ 4.038,10
A ROSSO cardinal	B SERPE TESTA MORO	€ 4.834,50
A ROSSO cardinal	B COCCO TESTA MORO	€ 4.834,50
A ITALIAN coffee	B STRUZZO CREMA	€ 4.834,50
A METALTITANIO	B ORO/argento FOGLIA	€ 4.738,80
A Argento Foglia Silver Foil	B Bianco/Nero Lucido (gloss white/black)	€ 5.535,20

Finitura superfici interne: METALSILVER
Finishings of inside surface: METALSILVER

CIAIKA - 110 SLIM - MODERN

Tavolino porta CD/DVD per 180 Cd (e/o 92 DVD)
Coffe table CD/DVD rack for 180 CD (and or 92 DVD)

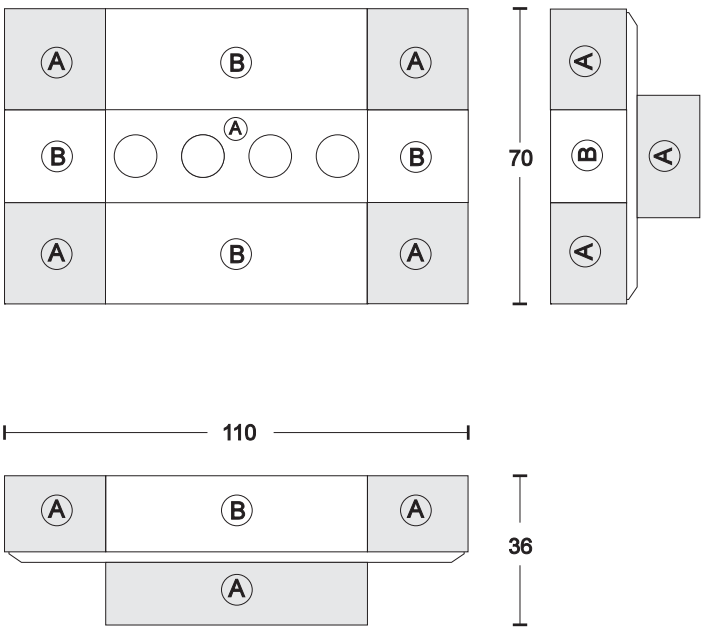

Finiture esterne standard
Outside Standard finishings

A CORDA 4	B ZEBRANO	€ 3.506,80
A METALSILVER	B ROVERE WENGE'	€ 3.506,80
A METALPIOMBO	B ROVERE SBIANCATO	€ 3.506,80
A METALBLACK	B BIANCO/WHITE	€ 3.506,80
A METALTITANIO	B METALSILVER	€ 3.506,80
A METALSILVER	B BLACKWOOD	€ 3.506,80
A METALSILVER	B GRAYWOOD	€ 3.506,80
A BORDEAUX	B ZEBRANO	€ 3.506,80
A ITALIAN coffee	B ZEBRANO	€ 3.506,80
A ROSSO cardinal	B SERPE TESTA MORO	€ 4.303,20
A ROSSO cardinal	B COCCO TESTA MORO	€ 4.303,20
A ITALIAN coffee	B STRUZZO CREMA	€ 4.303,20
A METALTITANIO	B ORO/argento FOGLIA	€ 4.170,10
A Argento Foglia Silver Foil	B Bianco/Nero Lucido (gloss white/black)	€ 4.702,50

Finitura superfici interne: METALSILVER
Finishings of inside surface: METALSILVER

1 WINDOWS - COFFEE TABLE - MODERN

Tavolino contenitore con vassoi estraibili - Coffee table container removable tray

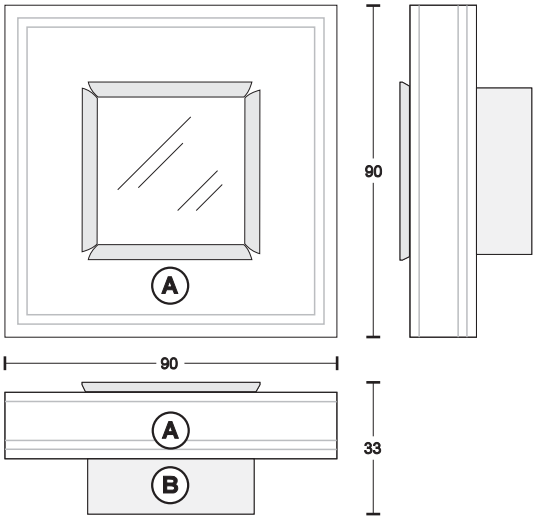

(A) tutti i laccati opachi, **€ 2.354,00**
decori oro/argento foglia - vassoi in vetro temperato,
maniglie oro/argento foglia
All opaque laquering,
decoration gold/silver foil - Ardened Glass Trays,
handles gold/silver foil

(B) tutti i laccati opachi-All opaque laquering

(A) Bianco/Nero lucido **€ 2.937,00**
decori oro/argento foglia - vassoi in vetro temperato,
maniglie decori oro/argento foglia
Gloss White or Black,
decoration gold/silver foil - Ardened Glass Trays,
handles Gold/Silverfoil

(B) tutti i laccati opachi-All opaque laquering

2 WINDOWS - COFFEE TABLE - MODERN

Tavolino contenitore con vassoi estraibili - Coffee table container removable tray

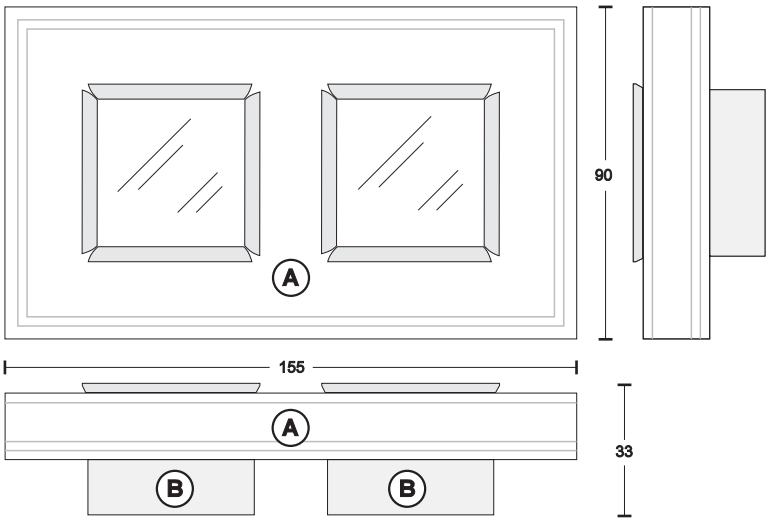

(A) Tutti laccati opachi - decori oro/argento foglia - vassoi in vetro temperato - maniglie oro/argento foglia **€ 3.861,00**
All opaque laquering - decoration gold/silver foil - Ardened Glass Trays - handles gold/silver foil

(B) tutti i laccati opachi-All opaque laquering

(A) Bianco/Nero lucido - decori oro/argento foglia - vassoi in vetro temperato - maniglie oro/argento foglia **€ 4.515,50**
Gloss White or Black - decoration gold/silver foil - Ardened Glass Trays - handles gold/silver foil

(D) tutti i laccati opachi-All opaque laquering

4 WINDOWS - COFFEE TABLE - MODERN

Tavolino contenitore con vassoi estraibili - Coffee table container removable tray

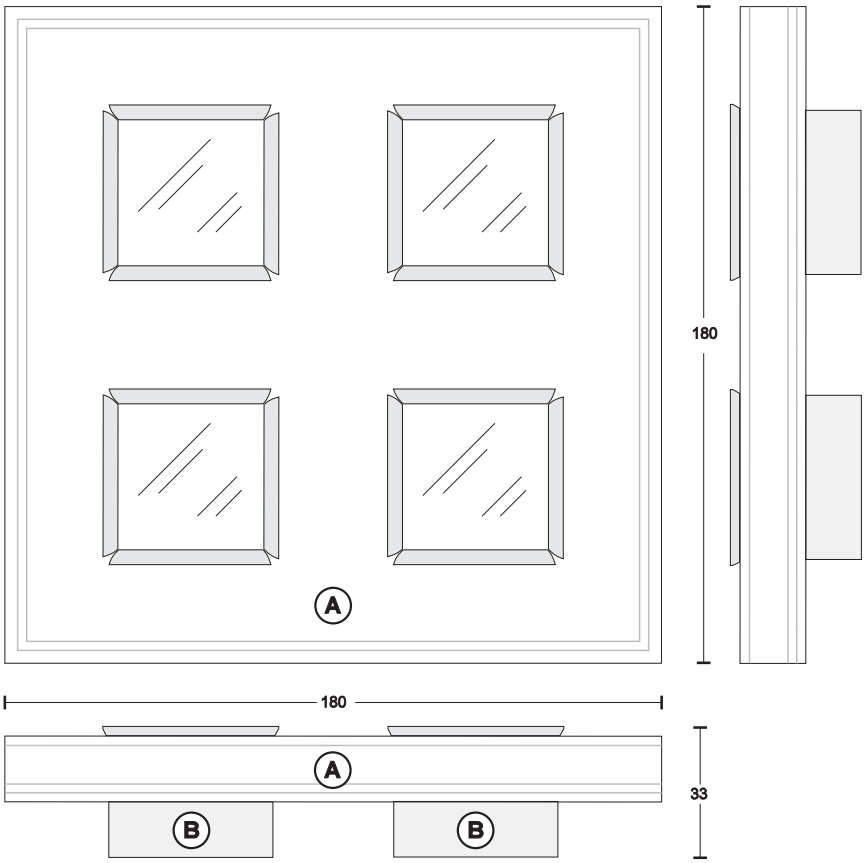

(A) tutti i laccati opachi,
decori oro/argento foglia-vassoi in vetro temperato,
maniglie oro/argento foglia
All opaque laquering,
decoration gold/silver foil - Ardened Glass Trays
handles gold/silver foil

(B) tutti i laccati opachi-All opaque laquering
€ 7.023,50

(A) Bianco/Nero lucido
decori oro/argento foglia-vassoi in vetro temperato,
maniglie decori oro/argento foglia
Gloss White or Black,
decoration gold/silver foil - Ardened Glass Trays
handles Gold/Silverfoil

(B) tutti i laccati opachi-All opaque laquering
€ 8.261,00

3 WINDOWS - COFFEE TABLE - MODERN

Tavolino contenitore con vassoi estraibili - Coffee table container removable tray

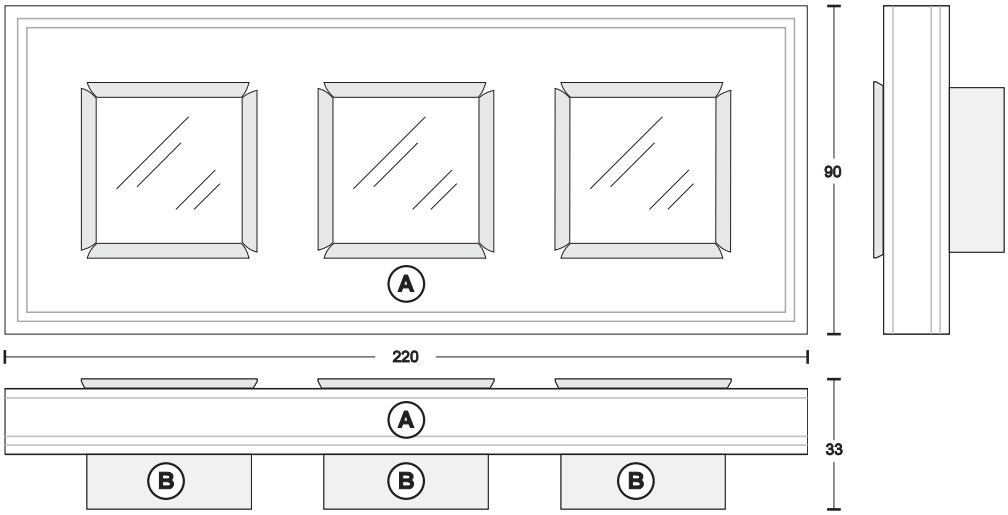

(A) Tutti laccati opachi - decori oro/argento foglia - vassoi in vetro temperato - maniglie oro/argento foglia
All opaque laquering - decoration gold/silver foil - Ardened Glass Trays - handles gold/silver foil — € 5.467,00

(B) tutti i laccati opachi-All opaque laquering

(A) Bianco/Nero lucido - decori oro/argento foglia - vassoi in vetro temperato - maniglie oro/argento foglia
Gloss White or Black - decoration gold/silver foil - Ardened Glass Trays - handles gold/silver foil — € 6.413,00

(D) tutti i laccati opachi-All opaque laquering

FLOWER 60

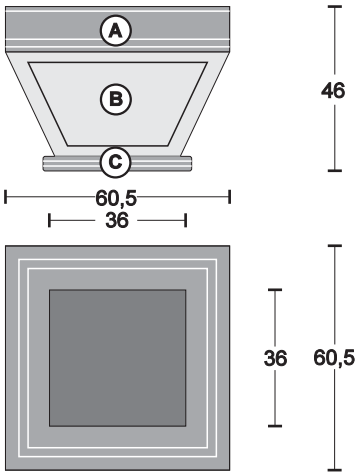

Finiture - finishings

A+B+C	- tutti i laccati-all laquering decorazioni-decorations (oro/argento foglia-gold/silver foil)	€ 1.515,80
A+C	- tutti i laccati-all laquering decorazioni-decorations (Oro/argento foglia-gold/silver foil)	€ 2.024,00
B	- oro/arg.foglia(gold/silver foil) decorazioni-decorations (tutti i laccati-all laquering)	
B	- tutte le pelli-all Leathers	
A+C	- Bianco/Nero Lucido-Gloss White/Black-	€ 1.912,90
B	- Bianco/Nero opaco-Opaque White/Black decorazioni-decorations (Argento foglia-Silver foil)	

Completo di vasca metallica zincata-including galvanized metal tank

VASE 90

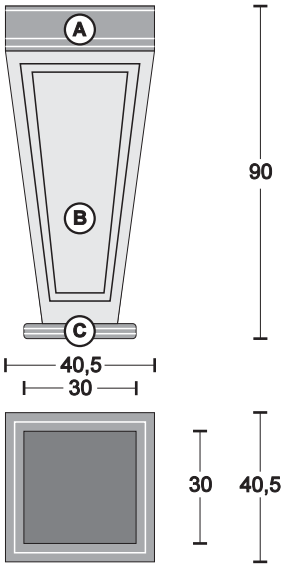

Finiture - finishings

A+B+C	- tutti i laccati-all laquering decorazioni-decorations (oro/argento foglia-gold/silver foil)	€ 1.507,00
A+C	- tutti i laccati-all laquering decorazioni-decorations (Oro/argento foglia-gold/silver foil)	€ 2.274,80
B	- oro/arg.foglia(gold/silver foil) decorazioni-decorations (tutti i laccati-all laquering)	
B	- tutte le pelli-all Leathers	
A+C	- Bianco/Nero Lucido-Gloss White/Black-	€ 2.064,70
B	- Bianco/Nero opaco-Opaque White/Black decorazioni-decorations (Argento foglia-Silver foil)	

Completo di vasca metallica zincata oppure chiusura top per colonna
including galvanized metal tank or top as column

VASE 125

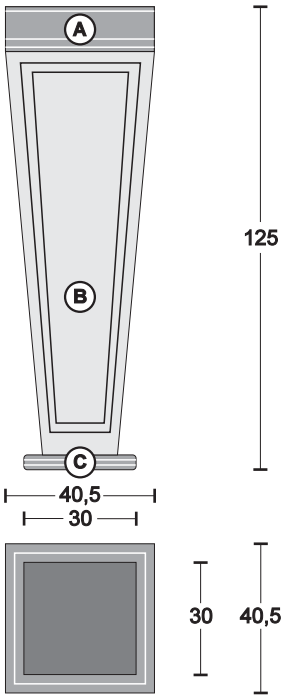

Finiture - finishings

A+B+C	- tutti i laccati-all laquering decorazioni-decorations (oro/argento foglia-gold/silver foil)	€ 1.646,70
A+C	- tutti i laccati-all laquering decorazioni-decorations (Oro/argento foglia-gold/silver foil)	€ 2.666,40
B	- oro/arg.foglia(gold/silver foil) decorazioni-decorations (tutti i laccati-all laquering)	
B	- tutte le pelli-all Leathers	
A+C	- Bianco/Nero Lucido-Gloss White/Black-	€ 2.205,50
B	- Bianco/Nero opaco-Opaque White/Black decorazioni-decorations (Argento foglia-Silver foil)	

Completo di vasca metallica zincata oppure chiusura top per colonna
including galvanized metal tank or top as column

FLOWER 60 - BRAZIER - MODERN

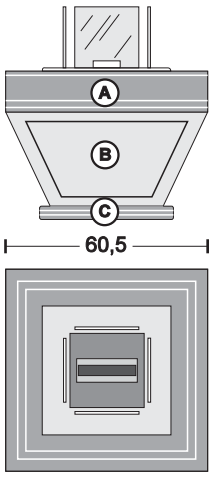

64

60,5

Finiture - finishings

A+B+C	- tutti i laccati-all laquering decorazioni-decorations (oro/argento foglia-gold/silver foil)	€ 3.086,60
A+C	- tutti i laccati-all laquering decorazioni-decorations (Oro/argento foglia-gold/silver foil)	€ 3.571,70
B	- oro/arg.foglia(gold/silver foil) decorazioni-decorations (tutti i laccati-all laquering)	
B	- tutte le pelli-all Leathers	
A+C	- Bianco/Nero Lucido-Gloss White/Black-	€ 3.466,10
B	- Bianco/Nero opaco-Opaque White/Black decorazioni-decorations (Argento foglia-Silver foil)	

Con braciere a bio-alcol removibile-completo di vetri temperati
Complete of bio-alcohol removable brazier-complete of tempered glass

VASE 90 - BRAZIER - MODERN

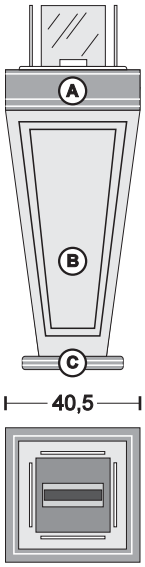

108

40,5

Finiture - finishings

A+B+C	- tutti i laccati-all laquering decorazioni-decorations (oro/argento foglia-gold/silver foil)	€ 3.078,90
A+C	- tutti i laccati-all laquering decorazioni-decorations (Oro/argento foglia-gold/silver foil)	€ 3.810,40
B	- oro/arg.foglia(gold/silver foil) decorazioni-decorations (tutti i laccati-all laquering)	
B	- tutte le pelli-all Leathers	
A+C	- Bianco/Nero Lucido-Gloss White/Black-	€ 3.610,20
B	- Bianco/Nero opaco-Opaque White/Black decorazioni-decorations (Argento foglia-Silver foil)	

Con braciere a bio-alcol removibile-completo di vetri temperati
Complete of bio-alcohol removable brazier-complete of tempered glass

VASE 125 - BRAZIER - MODERN

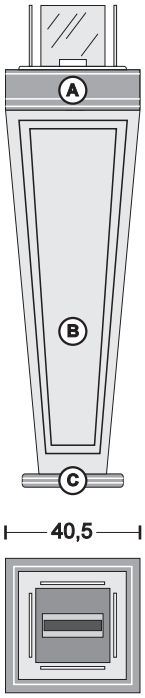

143

40,5

Finiture - finishings

A+B+C	- tutti i laccati-all laquering decorazioni-decorations (oro/argento foglia-gold/silver foil)	€ 3.213,10
A+C	- tutti i laccati-all laquering decorazioni-decorations (Oro/argento foglia-gold/silver foil)	€ 4.182,20
B	- oro/arg.foglia(gold/silver foil) decorazioni-decorations (tutti i laccati-all laquering)	
B	- tutte le pelli-all Leathers	
A+C	- Bianco/Nero Lucido-Gloss White/Black-	€ 3.744,40
B	- Bianco/Nero opaco-Opaque White/Black decorazioni-decorations (Argento foglia-Silver foil)	

Con braciere a bio-alcol removibile-completo di vetri temperati
Complete of bio-alcohol removable brazier-complete of tempered glass

CHEST-NOUVEAU-282 MODERN DIVANO - SOFA

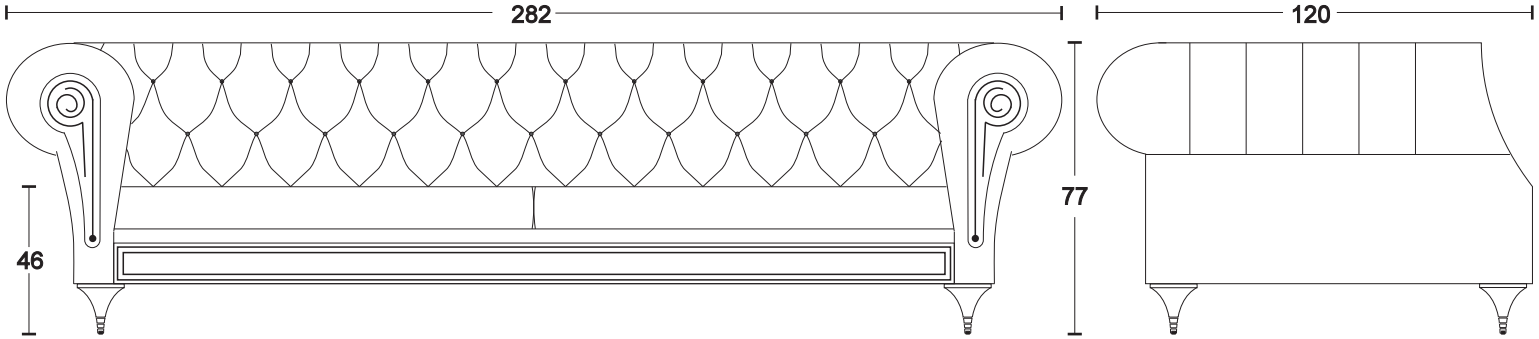

Pelle-Leather cat."SOFT"	Pelle-Leather cat."EXTRA"	Pelle-Leather cat."GLAM"
€ 13.651,00	€ 14.916,00	€ 16.307,50
Eco Nabuk Eco Nubuk	Velluto Velvet	
€ 11.663,30	€ 13.099,90	

CHEST-NOUVEAU-209 MODERN DIVANO - SOFA

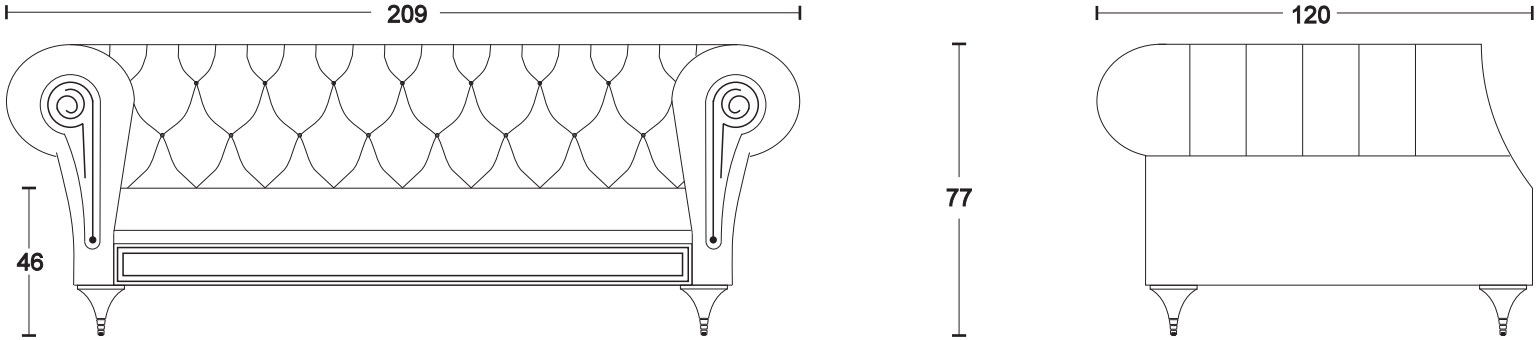

Pelle-Leather cat."SOFT"	Pelle-Leather cat."EXTRA"	Pelle-Leather cat."GLAM"
€ 10.928,50	€ 11.979,00	€ 13.145,00
Eco Nabuk Eco Nubuk	Velluto Velvet	
€ 9.512,80	€ 10.565,50	

CHEST-NOUVEAU-123 MODERN POLTRONA - ARMCHAIR

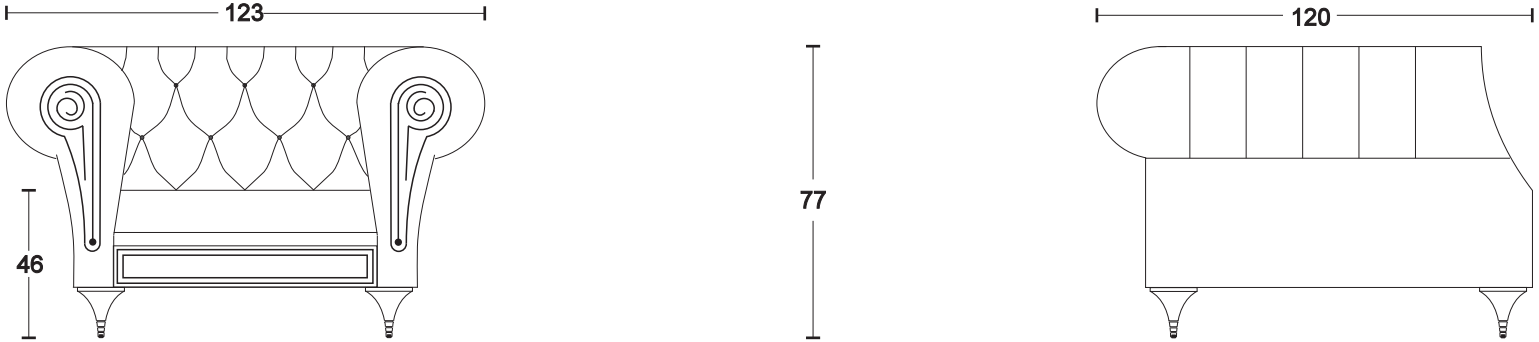

Pelle-Leather cat."SOFT"	Pelle-Leather cat."EXTRA"	Pelle-Leather cat."GLAM"
€ 9.212,50	€ 10.021,00	€ 10.956,00
Eco Nabuk Eco Nubuk	Velluto Velvet	
€ 7.362,30	€ 8.279,70	

CHEST NOUVEAU - MODERN

CHAISE LOUNGE - DX

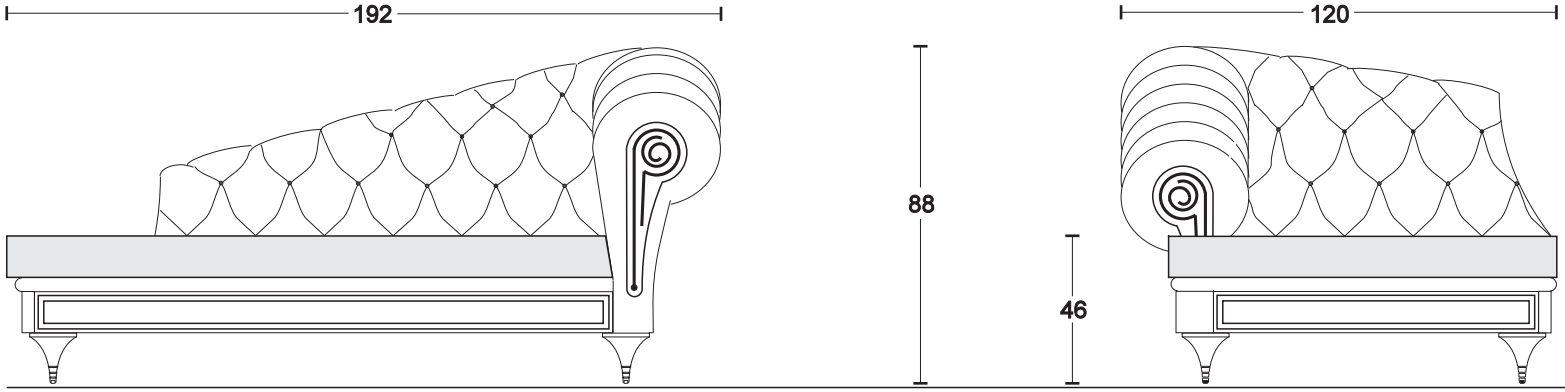

Pelle-Leather cat."SOFT"	Pelle-Leather cat."EXTRA"	Pelle-Leather cat."GLAM"
€ 10.912,00	€ 11.951,50	€ 13.106,50
Eco Nabuk Eco Nubuk	Velluto Velvet	
€ 8.684,50	€ 9.786,70	

CHEST NOUVEAU - MODERN

CHAISE LOUNGE - SX

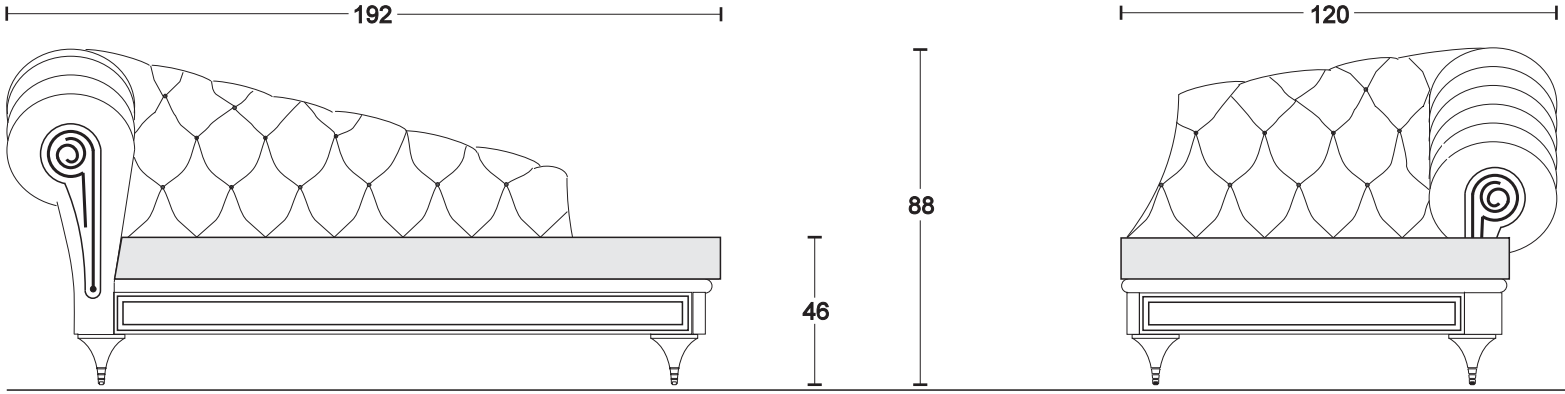

Pelle-Leather cat."SOFT"	Pelle-Leather cat."EXTRA"	Pelle-Leather cat."GLAM"
€ 10.912,00	€ 11.951,50	€ 13.106,50
Eco Nabuk Eco Nubuk	Velluto Velvet	
€ 8.684,50	€ 9.786,70	

CHEST NOUVEAU

Pelle Leather cat.SOFT	Pelle Leather cat.EXTRA	Pelle Leather cat.GLAM	Eco Nabuk Eco Nubuk	Velluto Velvet
€ 495,00	€ 583,00	€ 676,50	€ 284,90	€ 367,40

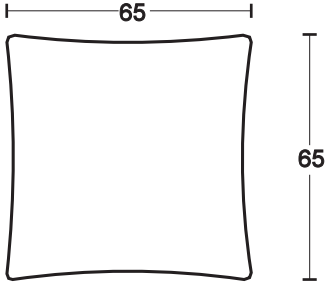

EXTRA CUSCINO - EXTRA CUSCION 65-55-45

Pelle Leather cat.SOFT	Pelle Leather cat.EXTRA	Pelle Leather cat.GLAM	Eco Nabuk Eco Nubuk	Velluto Velvet
€ 456,50	€ 533,50	€ 632,50	€ 266,20	€ 335,50

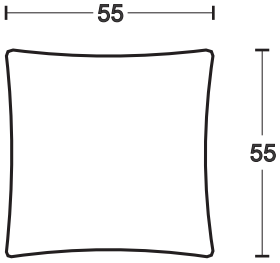

Pelle Leather cat.SOFT	Pelle Leather cat.EXTRA	Pelle Leather cat.GLAM	Eco Nabuk Eco Nubuk	Velluto Velvet
€ 412,50	€ 484,00	€ 561,00	€ 242,00	€ 303,60

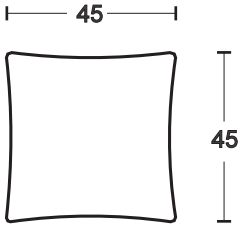

CONFORT-NOUVEAU-264 MODERN DIVANO - SOFA

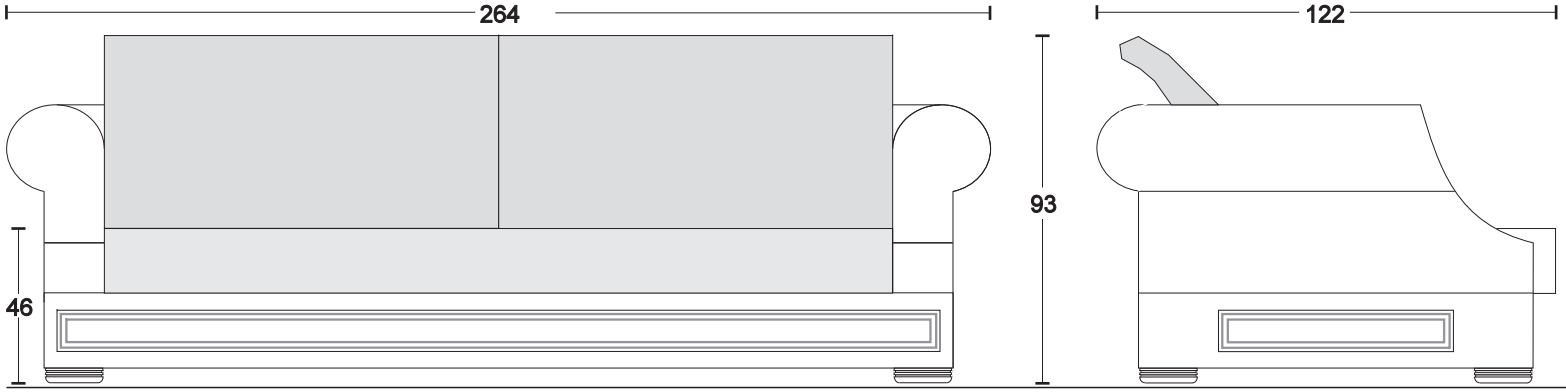

Pelle-Leather cat."SOFT"	Pelle-Leather cat."EXTRA"	Pelle-Leather cat."GLAM"
€ 10.906,50	€ 12.171,50	€ 13.497,00
Eco Nabuk Eco Nubuk	Velluto Velvet	
€ 8.323,70	€ 9.785,60	

CONFORT-NOUVEAU-193 MODERN DIVANO - SOFA

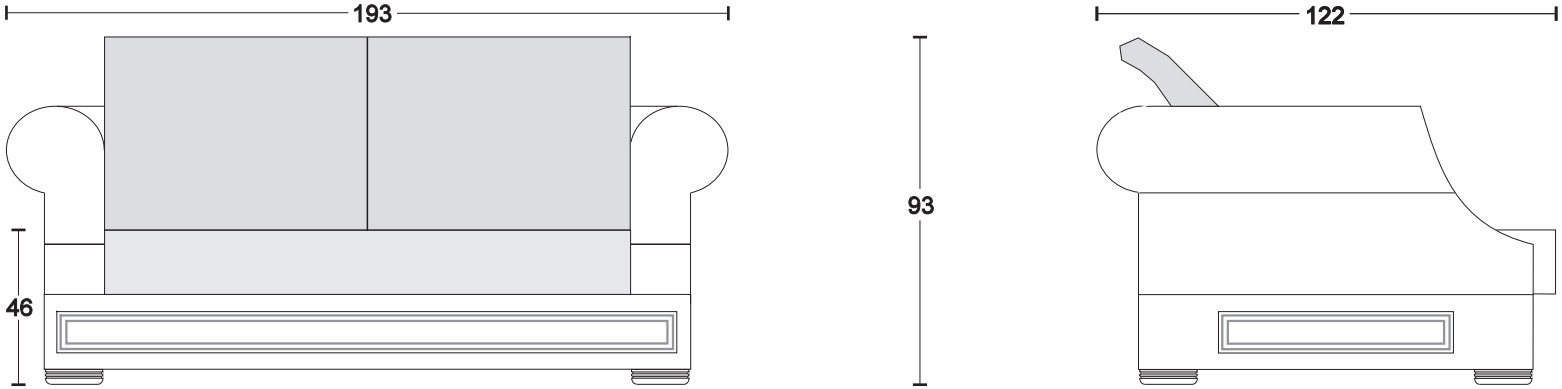

Pelle-Leather cat."SOFT"	Pelle-Leather cat."EXTRA"	Pelle-Leather cat."GLAM"
€ 9.119,00	€ 10.197,00	€ 11.385,00
Eco Nabuk Eco Nubuk	Velluto Velvet	
€ 7.033,40	€ 8.309,40	

CONFORT-NOUVEAU-125 MODERN POLTRONA - ARMCHAIR

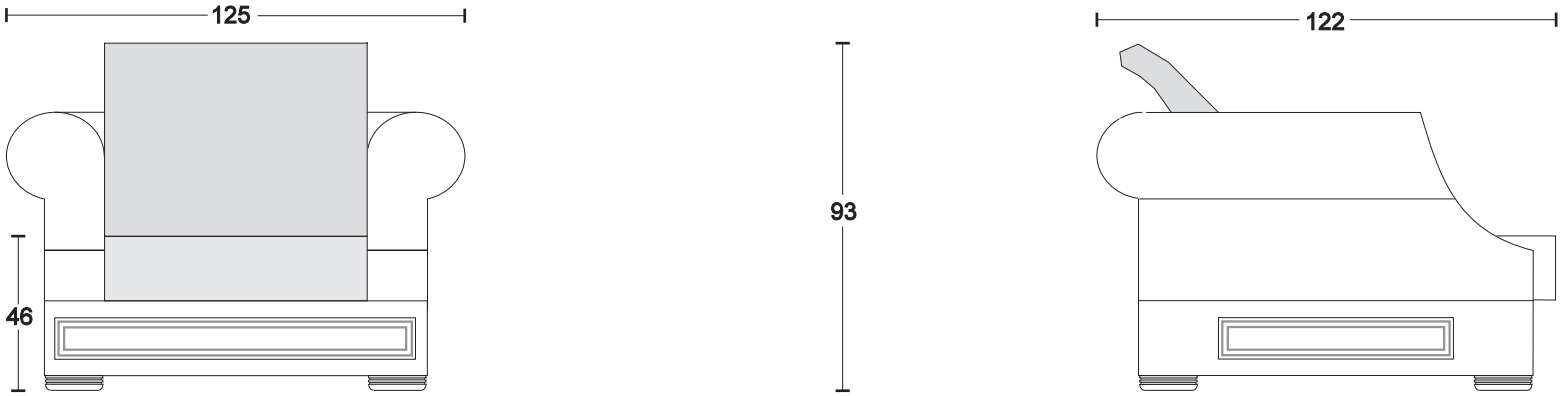

Pelle-Leather cat."SOFT"	Pelle-Leather cat."EXTRA"	Pelle-Leather cat."GLAM"
€ 6.957,50	€ 7.727,50	€ 8.552,50
Eco Nabuk Eco Nubuk	Velluto Velvet	
€ 5.439,50	€ 6.356,90	

CONFORT-NOUVEAU-264 LUMBAR CUSHION MODERN — DIVANO - SOFA

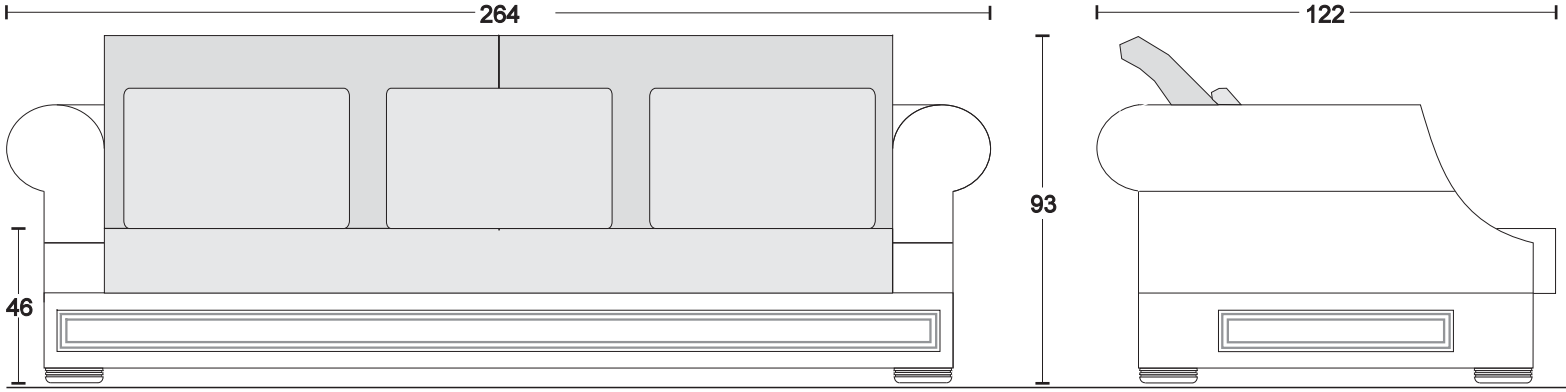

Pelle-Leather cat."SOFT"	Pelle-Leather cat."EXTRA"	Pelle-Leather cat."GLAM"
€ 12.045,00	€ 13.497,00	€ 15.015,00
Eco Nabuk Eco Nubuk	Velluto Velvet	
€ 9.082,70	€ 10.721,70	

CONFORT-NOUVEAU-193 LUMBAR CUSHION MODERN — DIVANO - SOFA

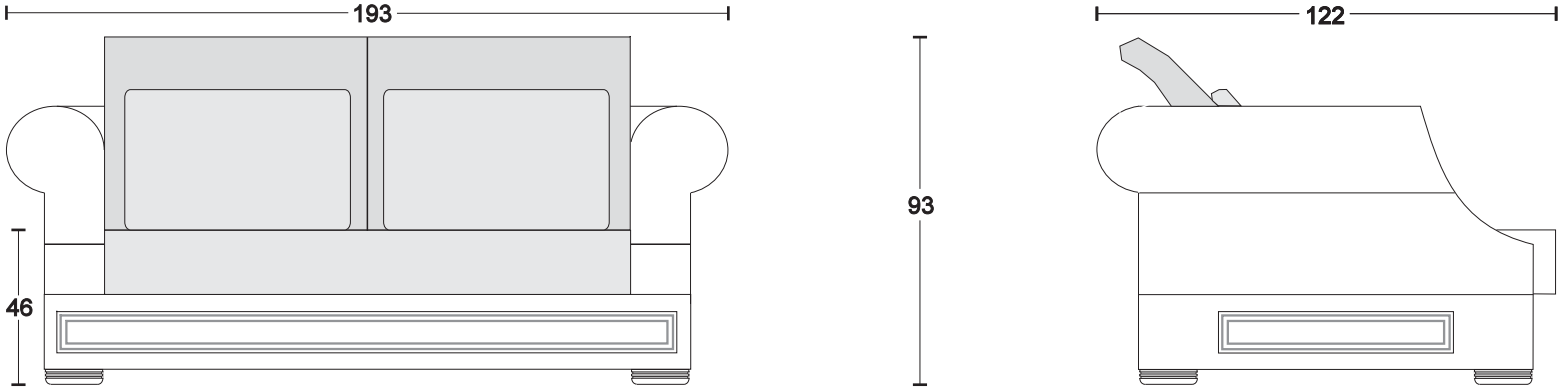

Pelle-Leather cat."SOFT"	Pelle-Leather cat."EXTRA"	Pelle-Leather cat."GLAM"
€ 9.878,00	€ 11.082,50	€ 12.397,00
Eco Nabuk Eco Nubuk	Velluto Velvet	
€ 7.539,40	€ 8.928,70	

CONFORT-NOUVEAU-125 LUMBAR CUSHION MODERN — POLTRONA - ARMCHAIR

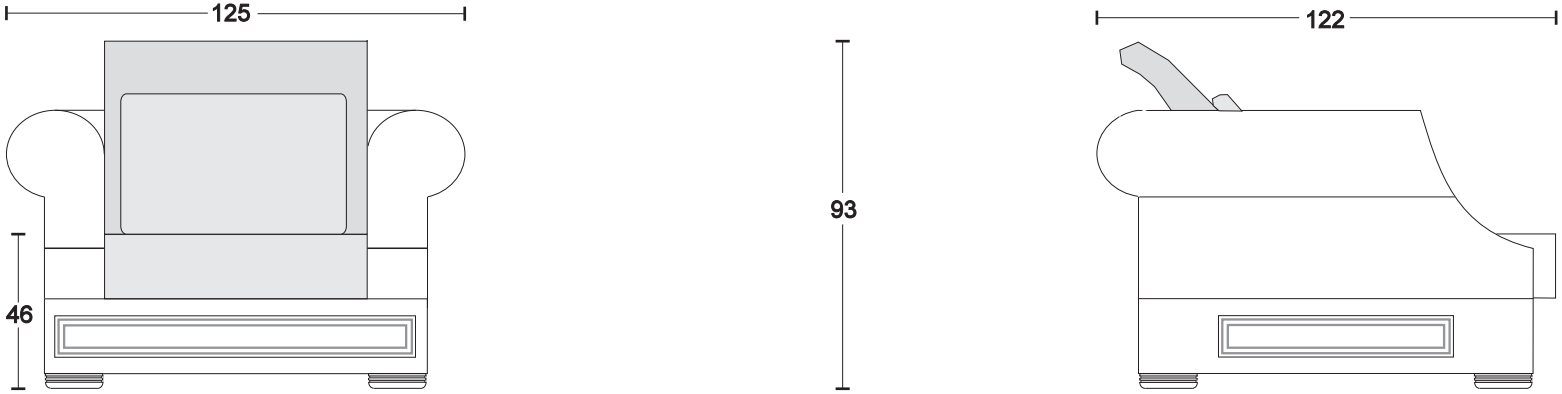

Pelle-Leather cat."SOFT"	Pelle-Leather cat."EXTRA"	Pelle-Leather cat."GLAM"
€ 7.337,00	€ 8.173,00	€ 9.058,50
Eco Nabuk Eco Nubuk	Velluto Velvet	
€ 5.692,50	€ 6.667,10	

CONFORT NOUVEAU- MODERN CHAISE LOUNGE - DX

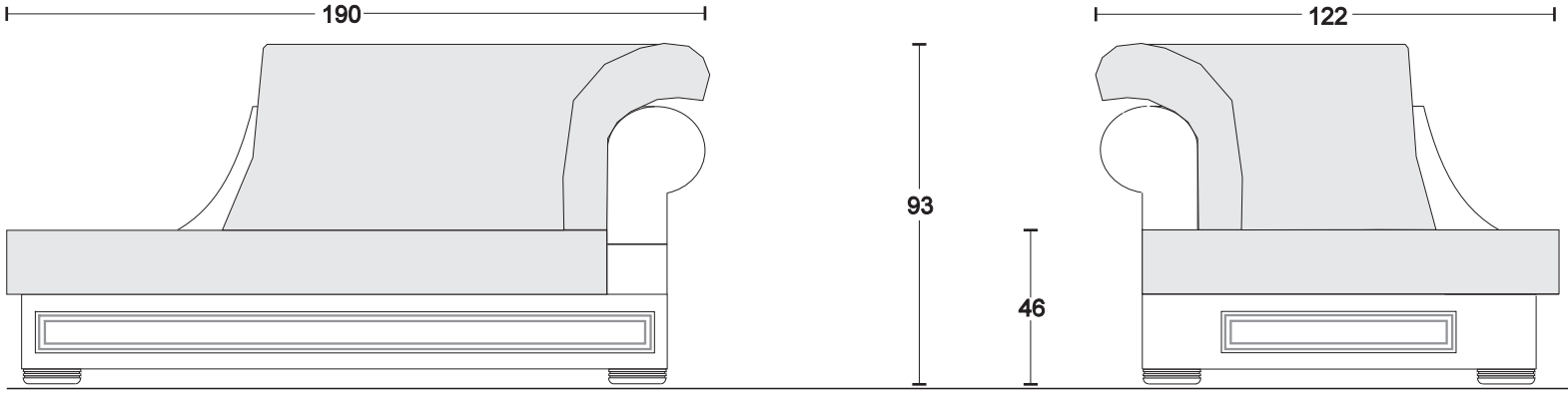

Pelle-Leather cat."SOFT"	Pelle-Leather cat."EXTRA"	Pelle-Leather cat."GLAM"
€ 8.970,50	€ 9.938,50	€ 10.884,50
Eco Nabuk Eco Nubuk	Velluto Velvet	
€ 7.191,80	€ 8.295,10	

CONFORT NOUVEAU- MODERN CHAISE LOUNGE - SX

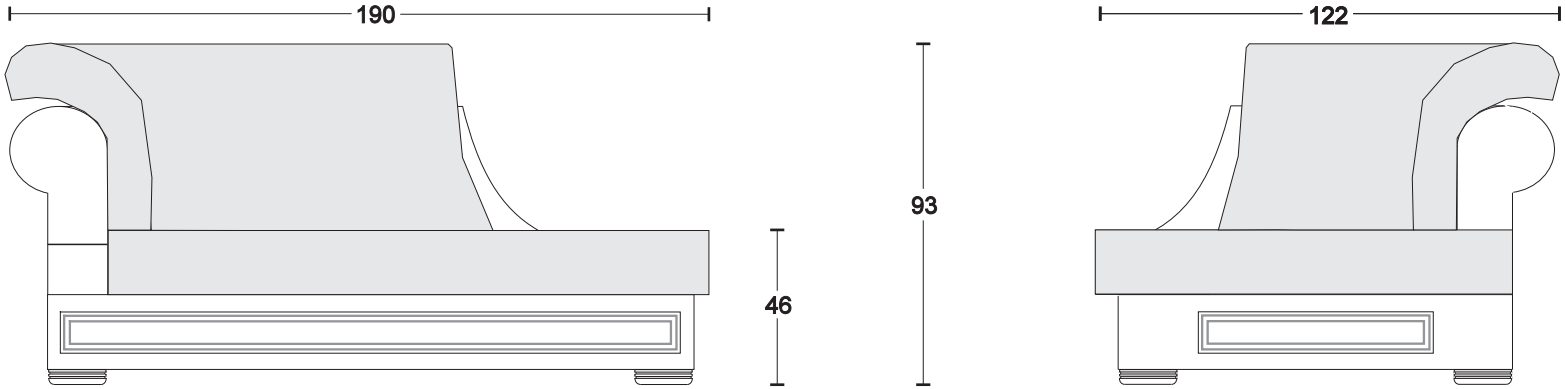

Pelle-Leather cat."SOFT"	Pelle-Leather cat."EXTRA"	Pelle-Leather cat."GLAM"
€ 8.970,50	€ 9.938,50	€ 10.884,50
Eco Nabuk Eco Nubuk	Velluto Velvet	
€ 7.191,80	€ 8.295,10	

CONFORT NOUVEAU

Pelle Leather cat.SOFT	Pelle Leather cat.EXTRA	Pelle Leather cat.GLAM	Eco Nabuk Eco Nubuk	Velluto Velvet
€ 495,00	€ 583,00	€ 676,50	€ 284,90	€ 367,40

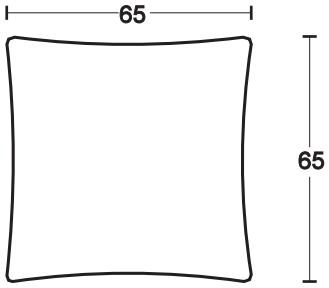

EXTRA CUSCINO - EXTRA CUSCION 65-55-45

Pelle Leather cat.SOFT	Pelle Leather cat.EXTRA	Pelle Leather cat.GLAM	Eco Nabuk Eco Nubuk	Velluto Velvet
€ 456,50	€ 533,50	€ 632,50	€ 266,20	€ 335,50

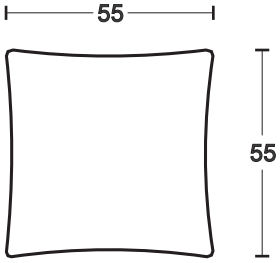

Pelle Leather cat.SOFT	Pelle Leather cat.EXTRA	Pelle Leather cat.GLAM	Eco Nabuk Eco Nubuk	Velluto Velvet
€ 412,50	€ 484,00	€ 561,00	€ 242,00	€ 303,60

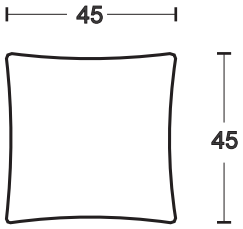

PLAY ROOM - POOL TABLE 10-12 FEET - MODERN

10 piedi dimensioni campo gioco cm. 284 x 142 - Dimensioni esterne cm. 320 x 178 - Russo H. 80; Snooker inglese H. 80; Americano H. 78
10 Feet playng fiel dimention cm. 284 x 142 - External dimention cm. 320 x 178 - Russian H. 80; English Snooker H. 80; American H. 78
Con piano in ardesia 40 mm - With playground stone slate 40 mm

12 piedi dimensioni campo gioco cm. 355 x 177 - Dimensioni esterne cm. 391 x 213 - Russo H. 80; Snooker inglese H. 80; Americano H. 78
12 Feet playng fiel dimention cm. 355 x 177 - External dimention cm. 391 x 213 - Russian H. 80; English Snooker H. 80; American H. 78
Con piano in ardesia 40 mm - With playground stone slate 40 mm

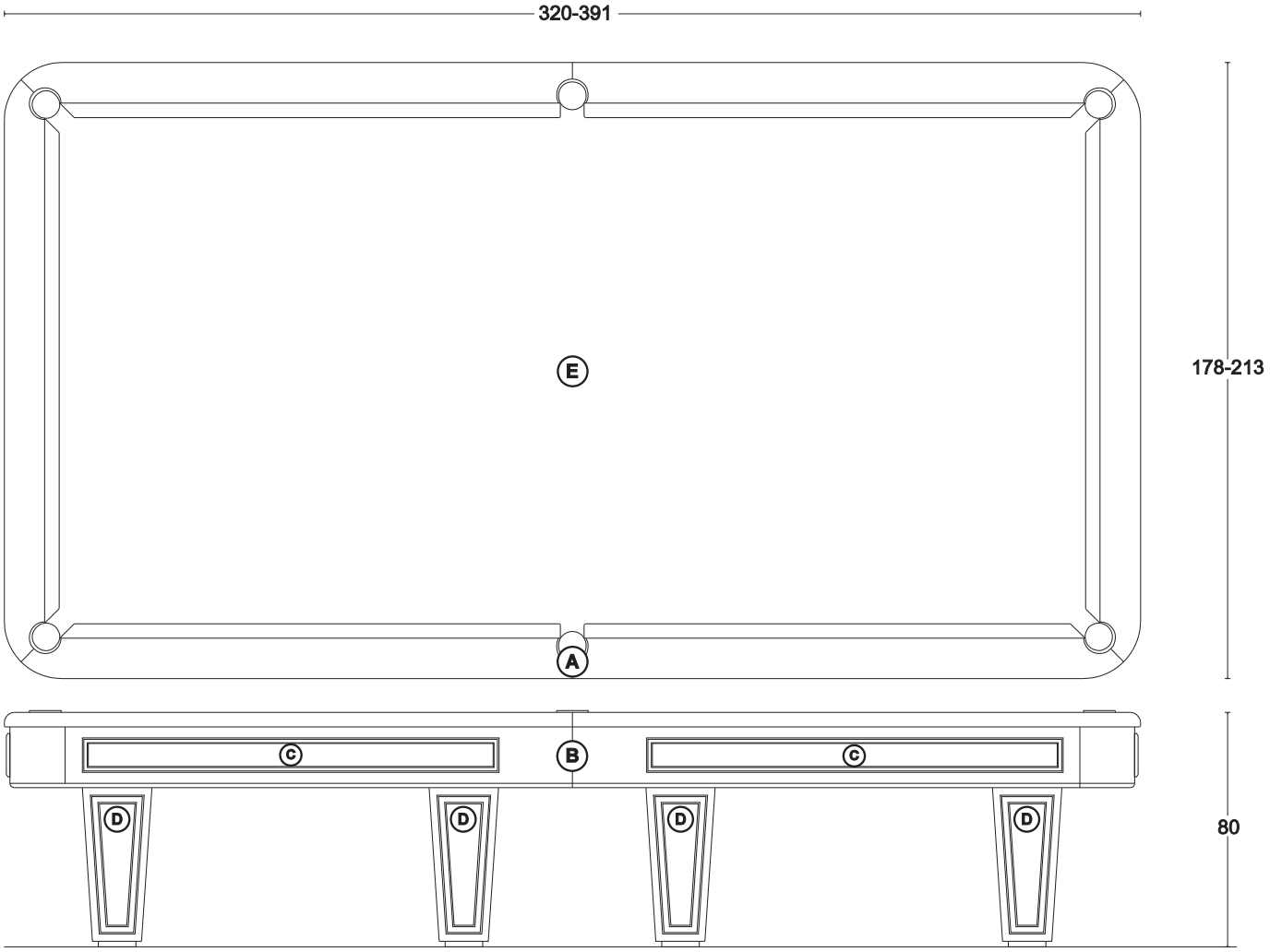

A+B+D Tutti i Laccato opaco / All Opaque laquered — D Decorazioni: anche in Oro/Argento foglia / D Decoration: Also Gold/Silver foil

C Inserti: Tutti i Laccato opaco - Decorazioni anche in oro/argento foglia
Insert: All Opaque laquered - Decoration also in Gold/Silver foil

E Tappeto biliardo colori diversi - Pool table cloth different colours

10 PIEDI-10 FEET € 60.087,50
12 PIEDI-12 FEET € 71.978,50

A+B+D Tutti i Laccato lucido / All Glossy laquered — D Decorazioni: anche in Oro/Argento foglia / D Decoration: Also in Gold/Silver foil

C Inserti: Tutti i Laccato lucido - Decorazioni anche in oro/argento foglia
Insert: All Glossy laquered - Decoration also in Gold/Silver foil

E Tappeto biliardo colori diversi - Pool table cloth different colours

10 PIEDI-10 FEET € 61.226,00
12 PIEDI-12 FEET € 73.117,00

PLAY ROOM - POOL LAMP 10-12 FEET - MODERN

Lampada a LED per biliardo da 10-12 piedi - 170 Watt - peso kg. 85
LED Lamp for Pool 10-12 Feet - 170 Watt - Weight Kg. 85

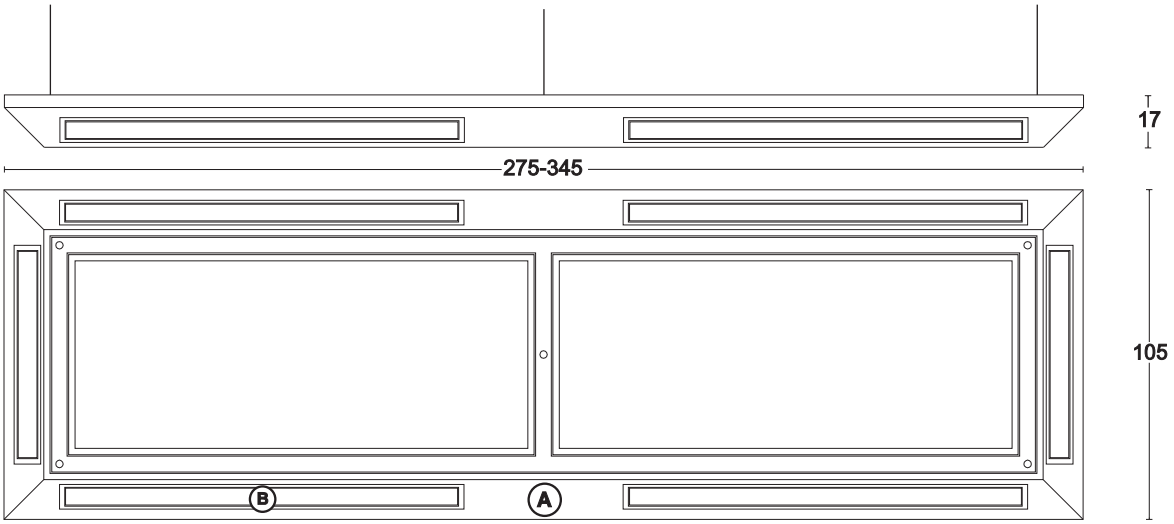

(A) Tutti i Laccato opaco - Decorazioni: anche in Oro/Argento foglia **€ 10.879,00**
All Opaque laquered - Decoration: Also Gold/Silver foil

(B) Inserti: Tutti i Laccato opaco - Decorazioni anche in oro/argento foglia
Insert: All Opaque laquered - Decoration also in Gold/Silver foil

(A) Tutti i Laccato lucido - Decorazioni: anche in Oro/Argento foglia **€ 11.891,00**
All Glossy laquered - Decoration: Also in Gold/Silver foil

(B) Inserti: Tutti i Laccato lucido - Decorazioni anche in oro/argento foglia
Insert: All Glossy laquered - Decoration also in Gold/Silver foil

CUE RACK-BODY-R - MODERN

Porta stecche per biliardo da 10-12 piedi con orologio al quarzo
Pool Cue Rack for 10-12 Feet with quarz clock

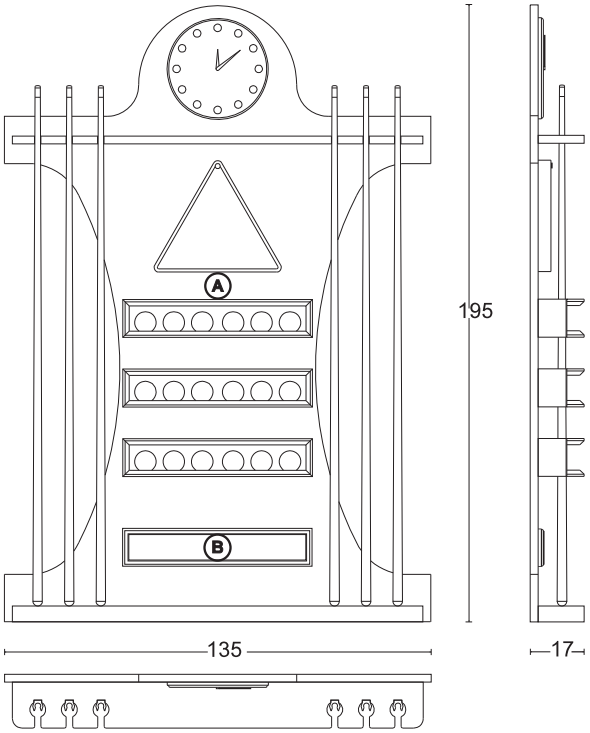

(A) Tutti i Laccato opaco - All Opaque laquered **€ 5.250,30**

(B) Inserti: Tutti i Laccato opaco - Decorazioni anche in oro/argento foglia
Insert: All Opaque laquered - Decoration also in Gold/Silver foil

(A) Tutti i Laccato lucido - All Glossy laquered **€ 6.009,30**

(B) Inserti: Tutte laccati lucidi - Decorazioni oro/argento fogliai
Insert: All Glossy laquered - Decorations Gold/Silver foil

- stecche in legno L.-Standard - da cm.160 (set 6 pezzi) - wooden Pool cue L.-Standard - cm. 160 (set 6 pieces) **€ 2.428,80**
- Set biglie Ø 52,4 mm. Snooker inglese - Ø 57mm. per Pool americano - Ø 68 mm per Piramide russa **€ 607,20**
  Set balls Ø 52,4 mm. english Snooker - Ø 57mm. American Pool - Ø 68 mm Russian Piramid

PLAY ROOM - POOL TABLE 8-9 FEET - MODERN

8 piedi dimensioni campo gioco cm. 224 x 112 - Dimensioni esterne cm. 260 x 148 - Russo H. 80; Snooker inglese H. 80; Americano H. 78
8 Feet playng fiel dimention cm. 224 x 112 - External dimention cm. 260 x 148 - Russian H. 80; English Snooker H. 80; American H. 78
Con piano in ardesia 25 mm - With playground stone slate 25 mm

9 piedi dimensioni campo gioco cm. 254 x 112 - Dimensioni esterne cm. 290 x 163 - Russo H. 80; Snooker inglese H. 80; Americano H. 78
9 Feet playng fiel dimention cm. 254 x 127 - External dimention cm. 290 x 163 - Russian H. 80; English Snooker H. 80; American H. 78
Con piano in ardesia 25 mm - With playground stone slate 25 mm

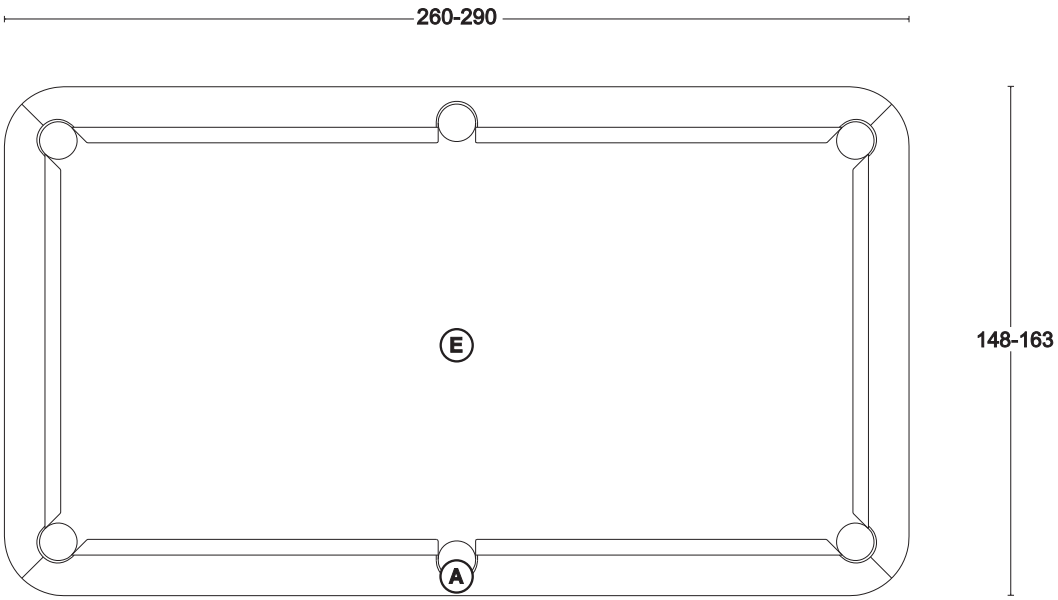

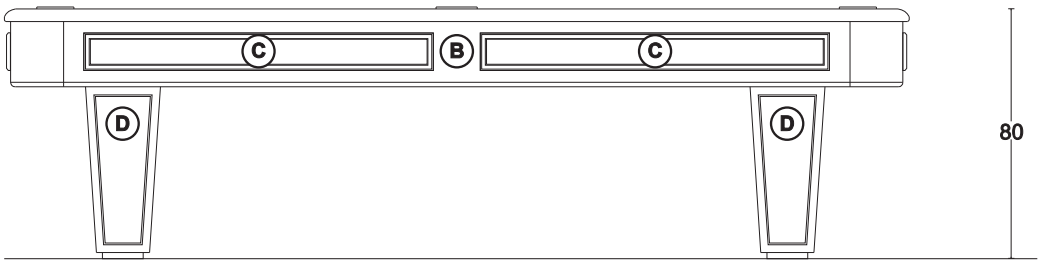

A+B+D Tutti i Laccato opaco / All Opaque laquered — D Decorazioni: Oro/Argento foglia / D Decoration: Gold/Silver foil

C Inserti: Tutti i Laccato opaco - Decorazioni oro/argento foglia
Insert: All Opaque laquered - Decoration Gold/Silver foil

E Tappeto biliardo colori diversi - Pool table cloth different colours

8 PIEDI-8 FEET € 41.239,00
9 PIEDI-9 FEET € 41.239,00

A+B+D Tutti i Laccato lucido / All Glossy laquered — D Decorazioni: Oro/Argento foglia / D Decoration: Gold/Silver foil

C Inserti: Tutti i Laccato lucido - Decorazioni oro/argento foglia
Insert: All Glossy laquered - Decoration Gold/Silver foil

E Tappeto biliardo colori diversi - Pool table cloth different colours

8 PIEDI-8 FEET € 42.251,00
9 PIEDI-9 FEET € 42.251,00

PLAY ROOM - POOL LAMP 8-9 FEET - MODERN

Lampada a LED per biliardo da 8-9 piedi - 130 Watt - peso kg. 70
LED Lamp for Pool 8-9 Feet - 130 Watt - Weight Kg. 70

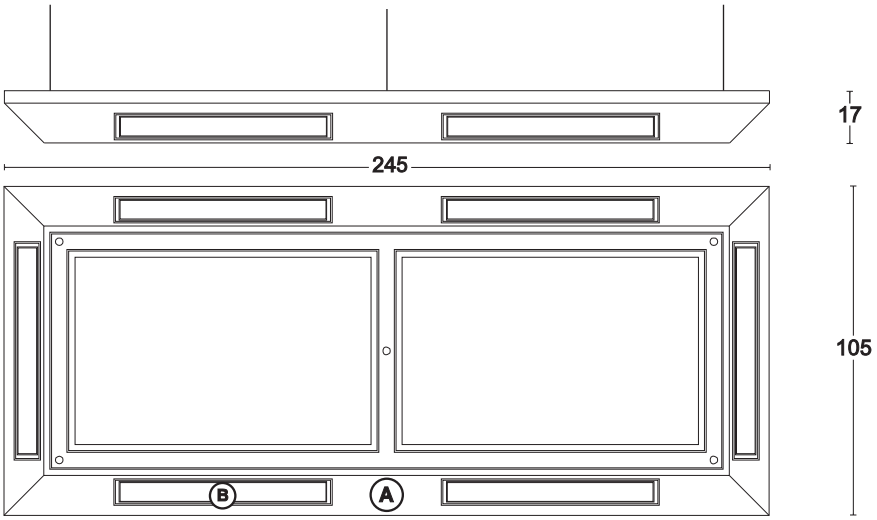

(A) Tutti i Laccato opaco - Decorazioni: anche in Oro/Argento foglia **€ 8.981,50**
All Opaque laquered - Decoration: Also Gold/Silver foil

(B) Inserti: Tutti i Laccato opaco - Decorazioni anche in oro/argento foglia
Insert: All Opaque laquered - Decoration also in Gold/Silver foil

(A) Tutti i Laccato lucido - Decorazioni: anche in Oro/Argento foglia **€ 8.981,50**
All Glossy laquered - Decoration: Also in Gold/Silver foil

(B) Inserti: Tutti i Laccato lucido - Decorazioni anche in oro/argento foglia
Insert: All Glossy laquered - Decoration also in Gold/Silver foil

CUE RACK-BODY-A - MODERN

Porta stecche per biliardo da 8-9 piedi con orologio al quarzo
Pool Cue Rack for 8-9 Feet with quarz clock

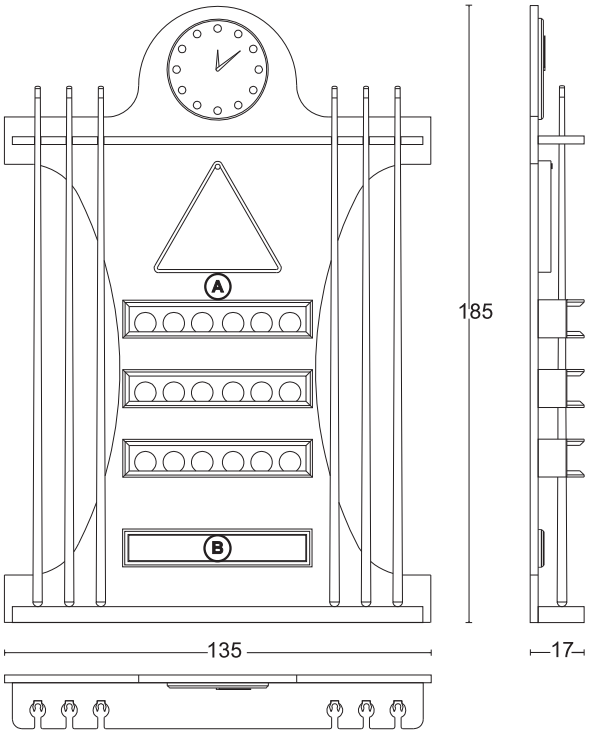

(A) Tutti i Laccato opaco - All Opaque laquered **€ 5.250,30**

(B) Inserti: Tutti i Laccato opaco - Decorazioni anche in oro/argento foglia
Insert: All Opaque laquered - Decoration also in Gold/Silver foil

(A) Tutti i Laccato lucido - All Glossy laquered **€ 6.009,30**

(B) Inserti: Tutte laccati lucidi - Decorazioni oro/argento fogliai
Insert: All Glossy laquered - Decorations Gold/Silver foil

- stecche in legno L.-Standard - da cm.145 (set 6 pezzi) - wooden Pool cue L.-Standard - cm. 145 (set 6 pieces) **€ 1.821,60**
- Set biglie Ø 52,4 mm. Snooker inglese - Ø 57mm. per Pool americano - Ø 68 mm per Piramide russa **€ 607,20**
  Set balls Ø 52,4 mm. english Snooker - Ø 57mm. American Pool - Ø 68 mm Russian Piramid

ALTRO-OTHER 299 > 330

DIVANI & POLTRONE - ACCESSORI - PORTA CD/DVD
SOFAS & ARMCHAIRS - ACCESSORIES - CD/DVD RACKS

VISMARADESIGN®

ELEGANCE - DIVANO - SOFA

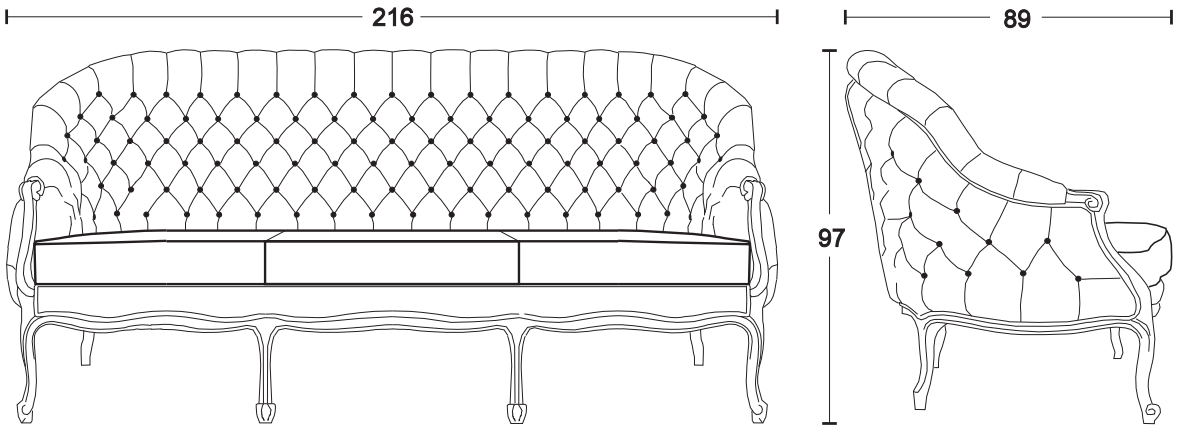

Pelle-Leather cat."SOFT"	Pelle-Leather cat."EXTRA"	Pelle-Leather cat."GLAM"	Eco Nabuk Eco Nabuk	Velluto Velvet
€ 9.696,50	€ 11.115,50	€ 12.628,00	€ 8.668,00	€ 9.174,00

ELEGANCE - POLTRONA - ARMCHAIR

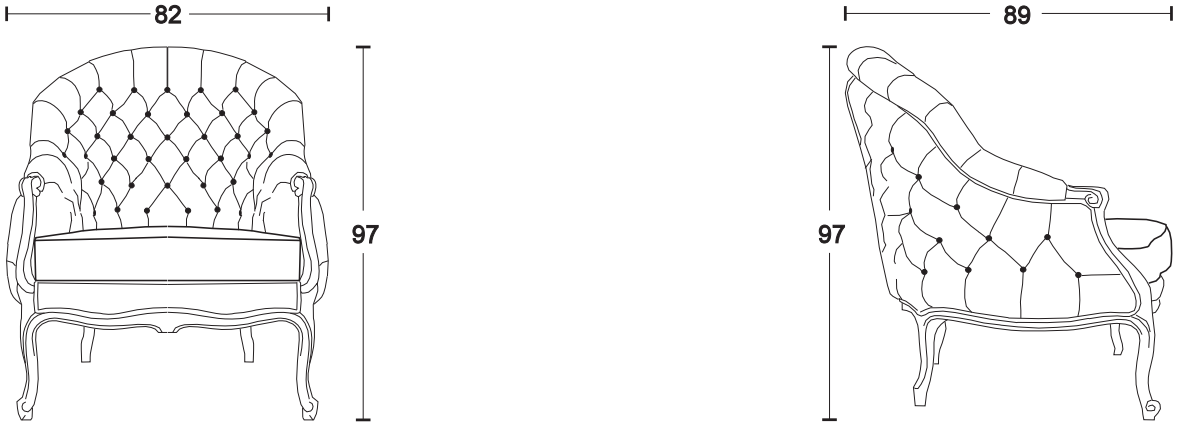

Pelle-Leather cat."SOFT"	Pelle-Leather cat."EXTRA"	Pelle-Leather cat."GLAM"	Eco Nabuk Eco Nabuk	Velluto Velvet
€ 6.344,80	€ 7.364,50	€ 8.374,30	€ 5.604,50	€ 6.061,00

BIJOU - DIVANO - SOFA

Pelle-Leather cat."SOFT"	Pelle-Leather cat."EXTRA"	Pelle-Leather cat."GLAM"	Eco Nabuk Eco Nabuk	Velluto Velvet
€ 11.552,20	€ 13.687,30	€ 15.888,40	€ 8.789,00	€ 9.801,00

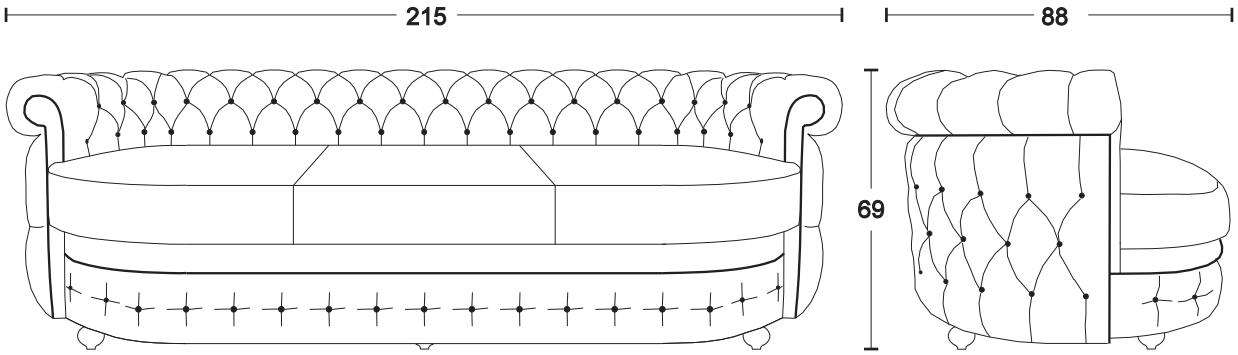

BIJOU - POLTRONA - ARMCHAIR

Pelle-Leather cat."SOFT"	Pelle-Leather cat."EXTRA"	Pelle-Leather cat."GLAM"	Eco Nabuk Eco Nabuk	Velluto Velvet
€ 6.653,90	€ 7.928,80	€ 9.196,00	€ 4.834,50	€ 5.467,00

VINTAGE - DIVANO - SOFA

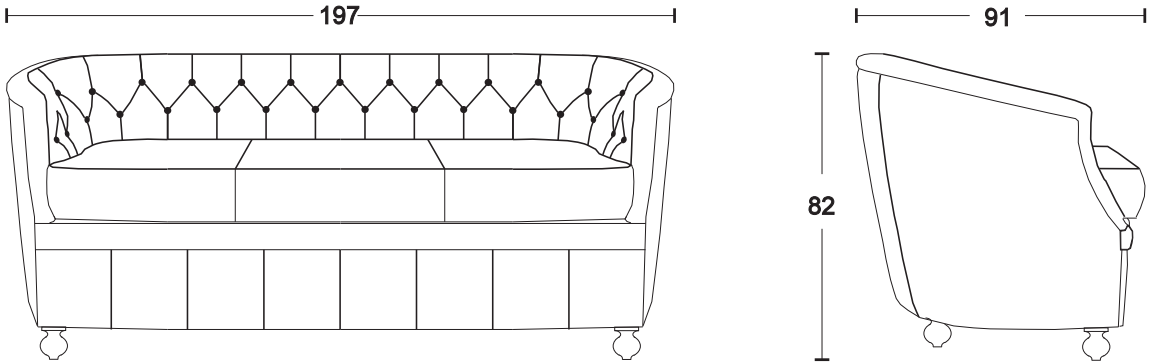

Pelle-Leather cat."SOFT"	Pelle-Leather cat."EXTRA"	Pelle-Leather cat."GLAM"	Eco Nabuk Eco Nabuk	Velluto Velvet
€ 8.197,20	€ 9.968,20	€ 11.737,00	€ 6.451,50	€ 6.897,00

VINTAGE - POLTRONA - ARMCHAIR

Pelle-Leather cat."SOFT"	Pelle-Leather cat."EXTRA"	Pelle-Leather cat."GLAM"	Eco Nabuk Eco Nabuk	Velluto Velvet
€ 5.373,50	€ 6.130,30	€ 7.394,20	€ 3.949,00	€ 4.438,50

MINIMIS 180/11 - 180/20

Tavolino Multiuso con ruote - profilo base Metalsilver
Multifunctional coffee table with wheels - Metalsilver bottom border

ROVERE WENGE'-BLACKWOOD	**€ 1.239,70**
ROSSO CARDINAL-VERDE LIMONE	**€ 1.239,70**
ORO/ARGENTO FOGLIA-GOLD/SILVER FOIL	**€ 2.138,40**
COCCO TESTA MORO-STRUZZO CREMA SERPE TESTA MORO(pelle - leather)	**€ 2.511,30**

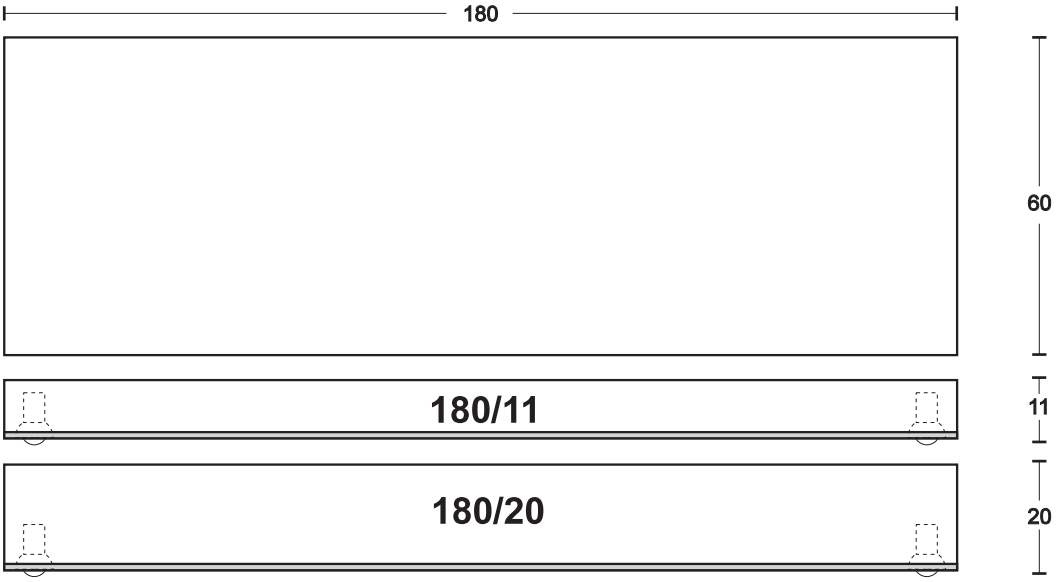

MINIMIS 120/11 - 120/20

Tavolino Multiuso con ruote - profilo base Metalsilver
Multifunctional coffee table with wheels - Metalsilver bottom border

ROVERE WENGE'-BLACKWOOD	**€ 1.023,00**
ROSSO CARDINAL-VERDE LIMONE	**€ 1.023,00**
ORO/ARGENTO FOGLIA-GOLD/SILVER FOIL	**€ 1.768,80**
COCCO TESTA MORO-STRUZZO CREMA SERPE TESTA MORO(pelle - leather)	**€ 2.066,90**

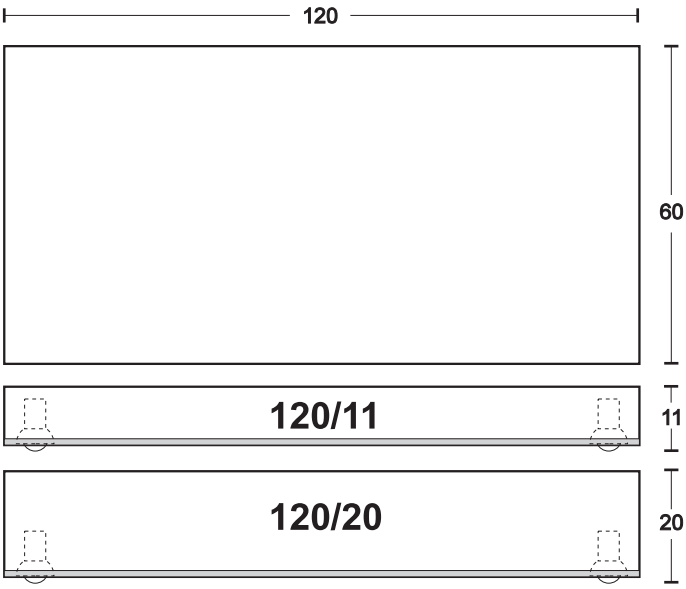

MINIMIS 60/11 - 60/20

Tavolino Multiuso con ruote - profilo base Metalsilver
Multifunctional coffee table with wheels - Metalsilver bottom border

ROVERE WENGE'-BLACKWOOD	**€ 834,90**
ROSSO CARDINAL-VERDE LIMONE	**€ 834,90**
ORO/ARGENTO FOGLIA-GOLD/SILVER FOIL	**€ 1.111,00**
COCCO TESTA MORO-STRUZZO CREMA SERPE TESTA MORO(pelle - leather)	**€ 1.448,70**

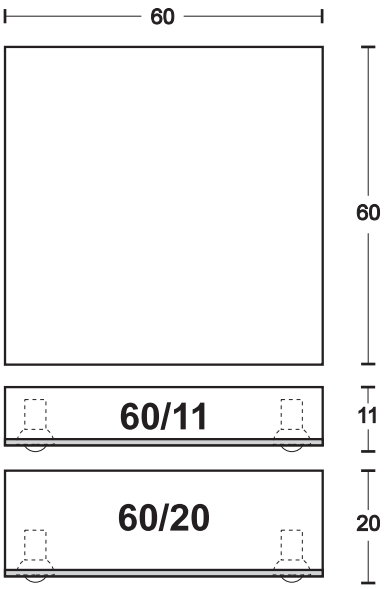

MINIMIS-GLAMOUR 180/11 - 180/20

Tavolino Multiuso con ruote - profilo base BIANCO su pelle nera, NERO su pelle bianca
Multifunctional coffee table with wheels - WHITE bottom border on black leather, BLACK on white leather

PELLE NERA - BLACK LEATHER
inserto triangolare-triangular insertion
COCCO BIANCO- WHITE COCCO

PELLE BIANCA - WHITE LEATHER
inserto triangolare-triangular insertion
COCCO NERO- BLACK COCCO

€ 3.201,00

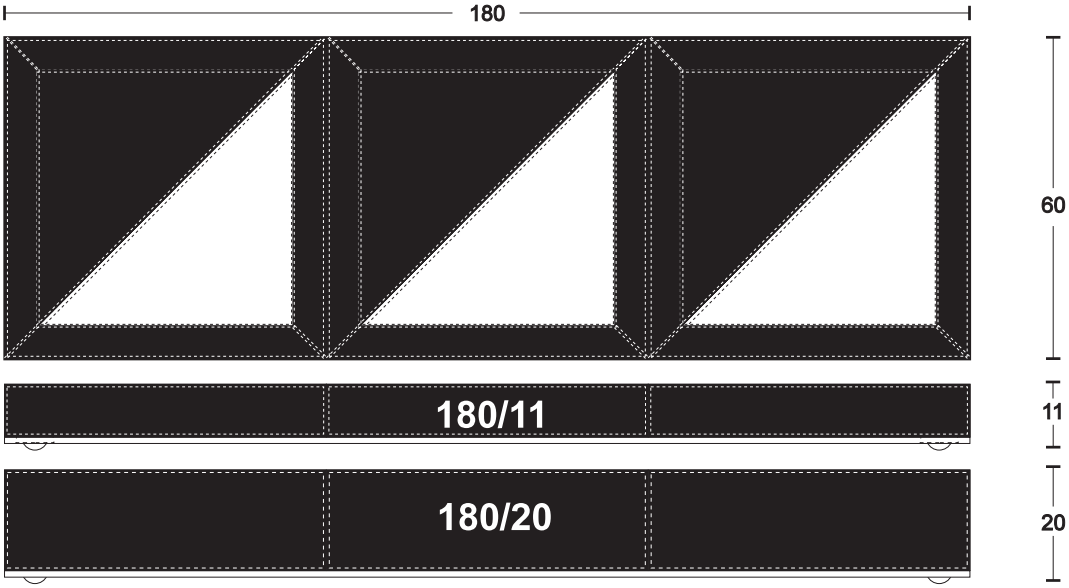

MINIMIS GLAMOUR 120/11 - 120/20

Tavolino Multiuso con ruote
Multifunctional coffee table with wheels

PELLE NERA - BLACK LEATHER
inserto triangolare-triangular insertion
COCCO BIANCO- WHITE COCCO

PELLE BIANCA - WHITE LEATHER
inserto triangolare-triangular insertion
COCCO NERO- BLACK COCCO

€ 2.365,00

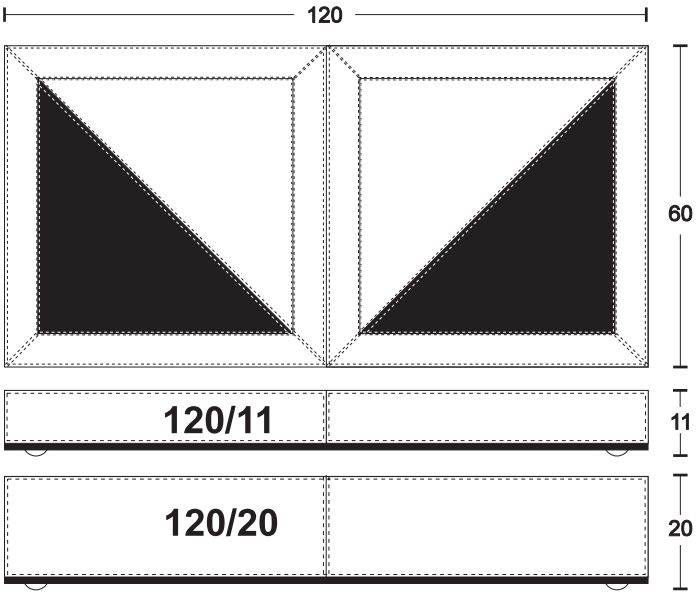

MINIMIS GLAMOUR 60/11 - 60/20

Tavolino Multiuso con ruote
Multifunctional coffee table with wheels

PELLE NERA - BLACK LEATHER
inserto triangolare-triangular insertion
COCCO BIANCO- WHITE COCCO

PELLE BIANCA - WHITE LEATHER
inserto triangolare-triangular insertion
COCCO NERO- BLACK COCCO

€ 1.455,30

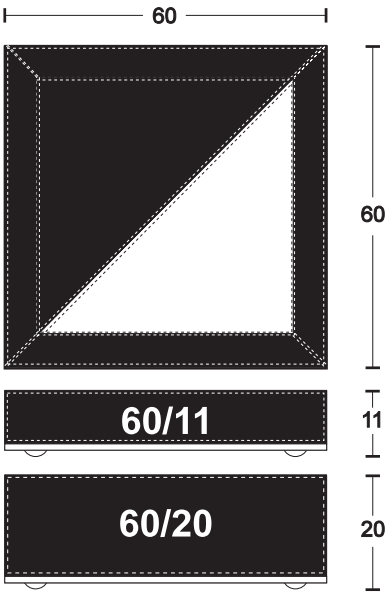

THE FAN - 163

Dipinto materico "Donna con Ventaglio"
Hand-made materic painting "Donna con Ventaglio"

(A) Tutti i laccati opachi-Decorazioni Oro/Argento all opaque laquering-decoration gold/silver foil	€ 1.556,50
(A) Nero/Bianco Lucido-Decori Oro/ argento Gloss Black/White-Gold/Silver Foil Decorations	€ 1.633,50

THE DANCER - 163

Dipinto materico "La danzatrice"
Hand-made materic painting "La danzatrice"

(A) Tutti i laccati opachi-Decorazioni Oro/Argento all opaque laquering-decoration gold/silver foil	€ 1.556,50
(A) Nero/Bianco Lucido-Decori Oro/ argento Gloss Black/White-Gold/Silver Foil Decorations	€ 1.633,50

THE FAN - 141

Dipinto materico "Donna con Ventaglio"
Hand-made materic painting "Donna con Ventaglio"

(A) Tutti i laccati opachi-Decorazioni Oro/Argento all opaque laquering-decoration gold/silver foil	€ 1.507,00
(A) Nero/Bianco Lucido-Decori Oro/ argento Gloss Black/White-Gold/Silver Foil Decorations	€ 1.578,50

THE DANCER - 141

Dipinto materico "La danzatrice"
Hand-made materic painting "La danzatrice"

(A) Tutti i laccati opachi-Decorazioni Oro/Argento all opaque laquering-decoration gold/silver foil	€ 1.507,00
(A) Nero/Bianco Lucido-Decori Oro/ argento Gloss Black/White-Gold/Silver Foil Decorations	€ 1.578,50

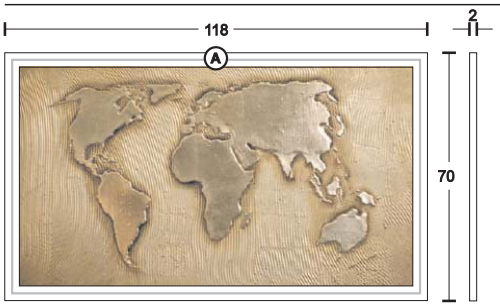

THE WORLD

Foglia platino o foglia argento o foglia oro
Platinum foil or silver foil or gold foil

(A) Tutti i laccati opachi-Decorazioni Oro/Argento all opaque laquering-decoration gold/silver foil	€ 2.123,00
(A) Nero/Bianco Lucido-Decori Oro/ argento Gloss Black/White-Gold/Silver Foil Decorations	€ 2.178,00

ROSES BALL

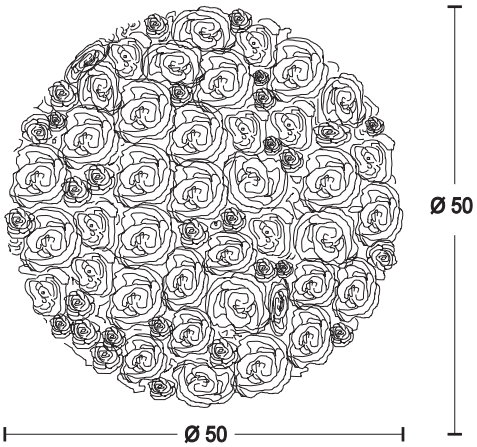

ROSE IN STOFFA (circa 300 teste)
FABRIC ROSES (about 300 heads

€ 1.252,90

Imballo cassa di legno
Wooden case packed

AMPHORA

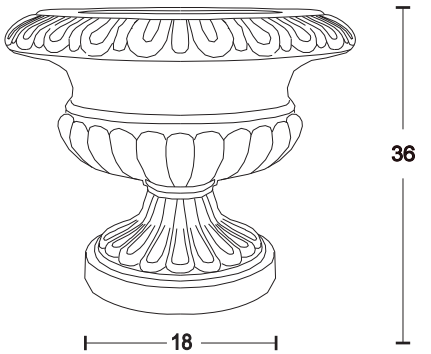

TUTTI I LACCATI LUCIDI
DECORAZIONI ORO/ARGENTO FOGLIA

ALL GLOSSY LAQUERING
SILVER/GOLD FOIL-DECORATION

€ 986,70

COMPLETAMENTE IN ORO/ARGENTO FOGLIA
FULLY GOLD/SILVERFOIL

€ 1.183,60

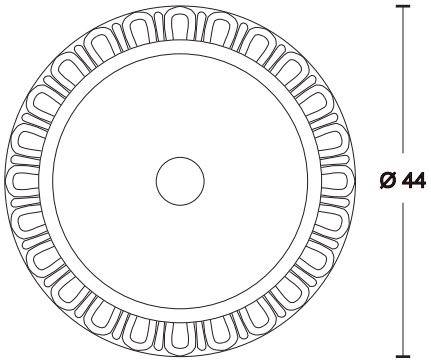

Imballo cassa di legno
Wooden case packed

VASE GLAM

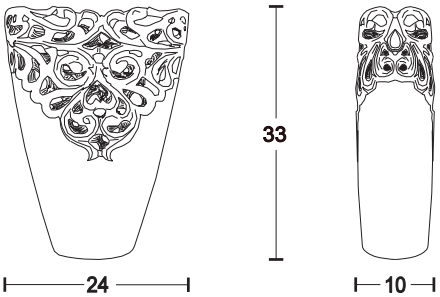

BIANCO LUCIDO
DECORAZIONI CROMO

WHITE GLOSSY
CHROME-DECORATION

€ 695,20

Imballo cassa di legno
Wooden case packed

DAVID

TUTTI I LACCATI LUCIDI
DECORAZIONI ORO/ARGENTO FOGLIA

ALL GLOSSY LAQUERING
SILVER/GOLD FOIL-DECORATION

€ 531,30

Completamente in oro/argento foglia
Fully gold/Silverfoir

€ 638,00

Imballo cassa di legno
Wooden case packed

DIANA

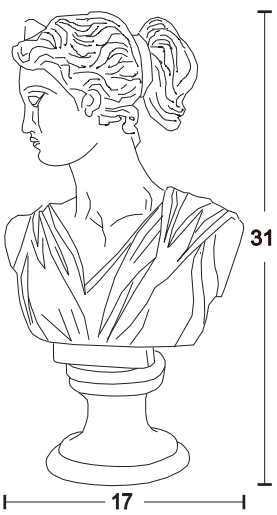

TUTTI I LACCATI LUCIDI
DECORAZIONI ORO/ARGENTO FOGLIA

ALL GLOSSY LAQUERING
SILVER/GOLD FOIL-DECORATION

€ 531,30

Completamente in oro/argento foglia
Fully gold/Silverfoir

€ 638,00

Imballo cassa di legno
Wooden case packed

BIG DAVID

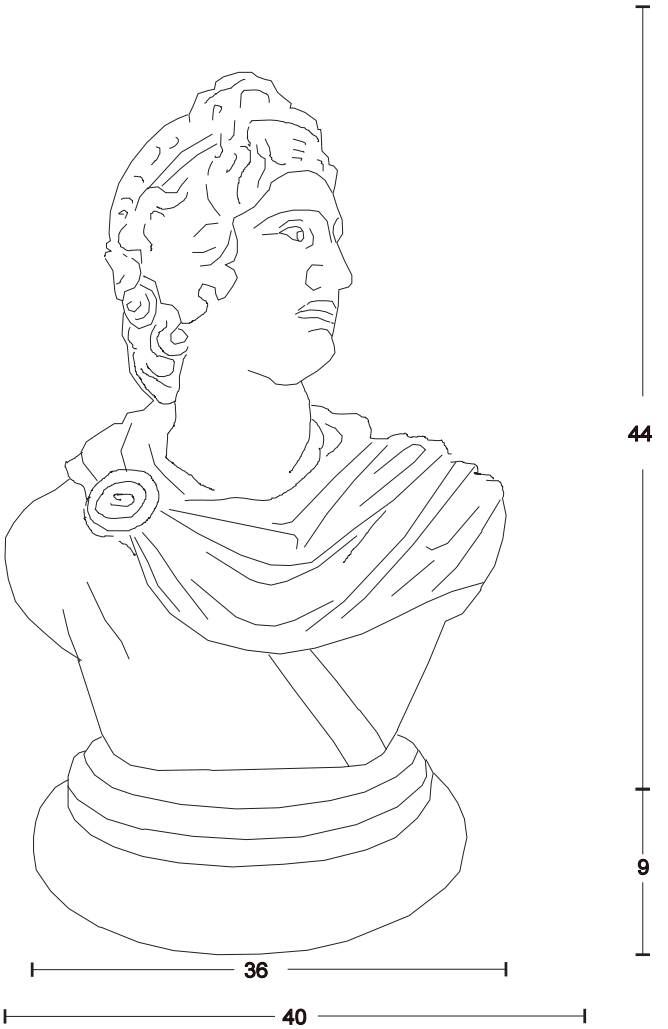

TUTTI I LACCATI LUCIDI-DECORAZIONI ORO/ARGENTO FOGLIA

ALL GLOSSY LAQUERING-SILVER/GOLD FOIL-DECORATION

€ 1.163,80

Completamente in oro/argento foglia
Fully gold/Silverfoir € 1.404,70

Imballo cassa di legno-Wooden case packed

THE HORSE

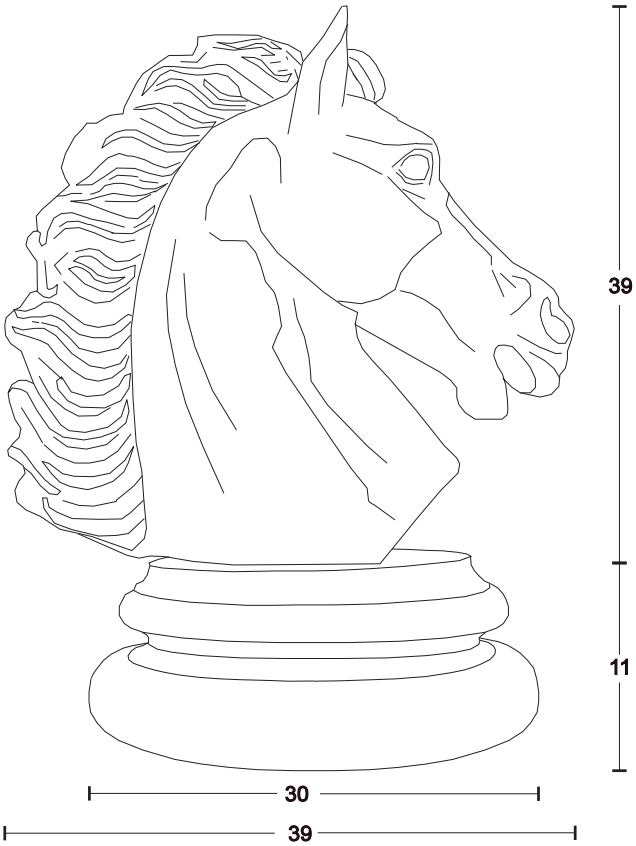

TUTTI I LACCATI LUCIDI-DECORAZIONI ORO/ARGENTO FOGLIA

ALL GLOSSY LAQUERING-SILVER/GOLD FOIL-DECORATION

€ 1.087,90

Completamente in oro/argento foglia
Fully gold/Silverfoir € 1.251,80

Imballo cassa di legno-Wooden case packed

EMPIRE

Porta CD alogeno per 122 CD (220 o 110 volts)
Halogen CD rack for 122 CD (220 or 110 volts)

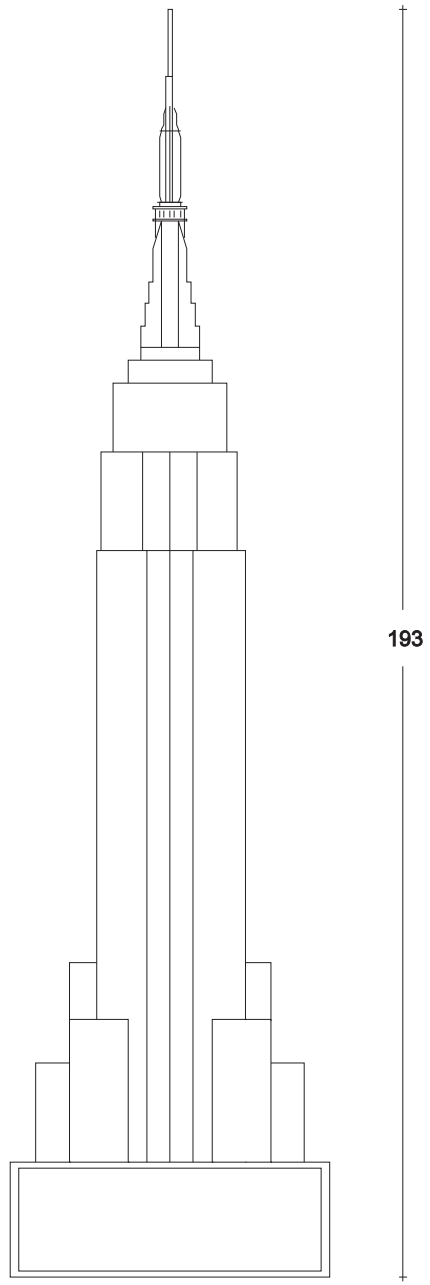

Elemento porta cd per 122 unità (50 posizionabili nella struttura della facciata, nascosti da appositi sportelli, ed il resto nel cassetto posizionato nel piedistallo.
Realizzato in acciaio inox, è la riproduzione in scala 1 : 200 del famoso "Empire".
Si tratta di un porta cd artistico, adatto sia ad ambientazioni private che pubbliche.
Sette faretti alogeni animano la costruzione, creando una speciale atmosfera ed un ambiente soft.

Cd rack for 122 units (50 CD's can be placed in the structure of the facade through the use of the swivel doors and the rest can be stored in the drawer in the pedestal).
Made of stainless steel metal sheets, it is the recontruction on a scale 1 : 200 of the famous "Empire".
It is an artistic cd-rack, suitable for public as well as private settings.
Seven halogen spotlights give the building a lively energy creating a special atmosphere and a soft environment.

PREZZO - PRICE **€ 7.531,70**

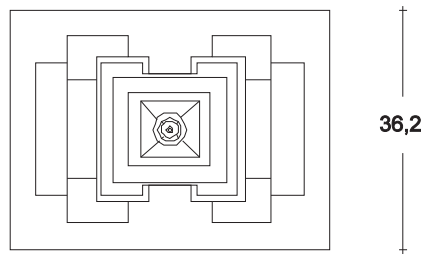

OPTIONAL
Base laccata- Laquered pedestal (cm. 56 x 44 x 3)
METALTITANIO / METALSILVER

PREZZO - PRICE **€ 291,50**

SCRIGNO

Porta CD/DVD per 960 CD (e/o 432 DVD) a parete
Wall CD/DVD Rack for 960 CD (and or 432 DVD)

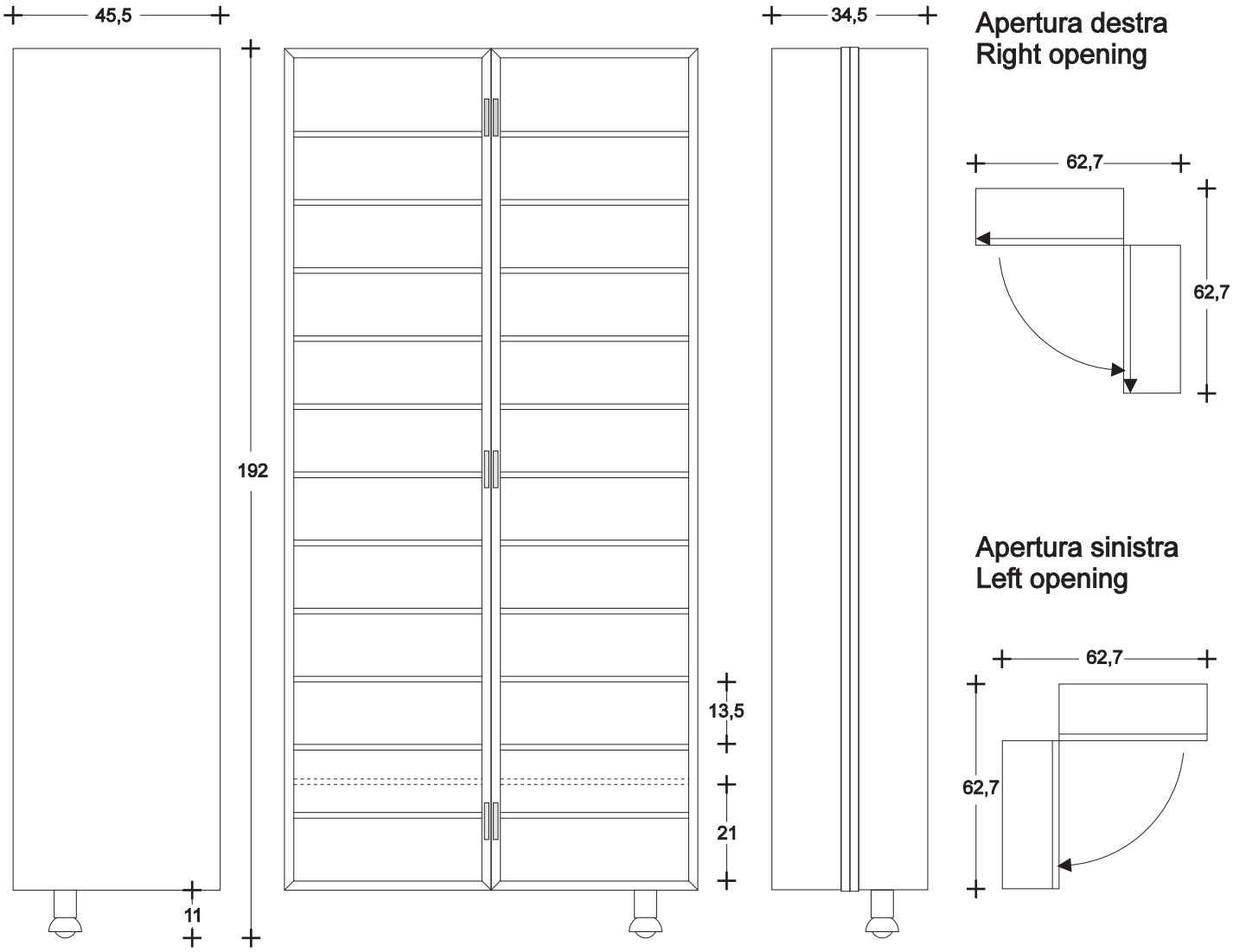

ROVERE WENGE' Cornice centrale - Central frame: METALSILVER Ripiani interni - Inner shelves :METALSILVER	€ 3.150,40
ZEBRAN Cornice centrale - Central frame :ITALIAN COFFEE Ripiani interni - Inner shelves:METALSILVER	€ 3.150,40
BLACKWOOD Cornice centrale - Central frame :METALSILVER Ripiani interni - Inner shelves : METALSILVER	€ 3.150,40
GRAYWOOD Cornice centrale - Central frame :METALSILVER Ripiani interni - Inner shelves :METALSILVER	€ 3.150,40
ARGENTO FOGLIA - SILVER-FOIL Cornice centrale - Central frame:METALTITANIO Ripiani interni - Inner shelves:METALSILVER	€ 3.972,10
ORO FOGLIA - GOLD-FOIL Cornice centrale - Central frame:METALTITANIO Ripiani interni - Inner shelves:METALSILVER	€ 3.972,10
SERPE TESTA MORO (Pelle - Leather) Cornice centrale - Central frame:ROSSO CARDINAL Ripiani interni - Inner shelves:METALSILVER	€ 4.768,50
STRUZZO CREMA (Pelle - Leather) Cornice centrale - Central frame:TALIAN COFFEE Ripiani interni - Inner shelves:METALSILVER	€ 4.768,50
COCCO TESTA MORO (Pelle - Leather) Cornice centrale - Central frame:ROSSO CARDINAL Ripiani interni - Inner shelves:METALSILVER	€ 4.768,50
ROSSO CARDINAL Cornice centrale - Central frame:METALTITANIO Ripiani interni - Inner shelves:METALSILVER	€ 3.111,90

SCRIGNO GLAMOUR

Porta CD/DVD per 960 CD (e/o 432 DVD)a parete
Wall CD/DVD Rack for 960 CD (and or 432 DVD)

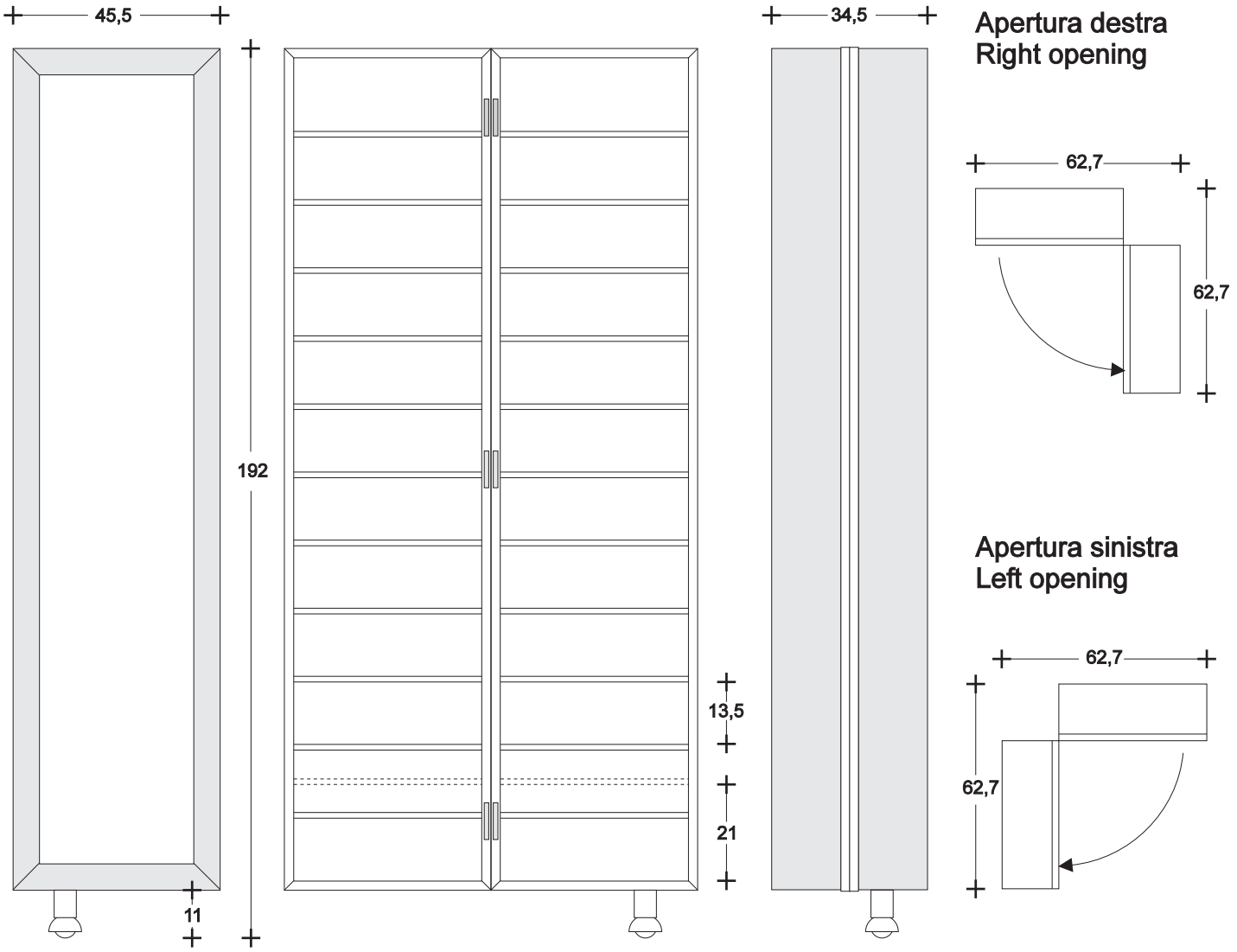

PELLE NERA - BLACK LEATHER **€ 5.149,10**
inserto - insertion: COCCO BIANCO - WHITE COCCO
Cornice centrale - Central frame:METALBLACK
Ripiani interni - Inner shelves:METALSILVER

PELLE NERA - BLACK LEATHER **€ 5.149,10**
inserto - insertion: COCCO DORATO - GOLDEN COCCO
Cornice centrale - Central frame:METALBLACK
Ripiani interni - Inner shelves:METALSILVER

PELLE NERA - BLACK LEATHER **€ 5.540,70**
inserto - insertion: CAVALLINO ZEBRATO - STRIPED "CAVALLINO"
Cornice centrale - Central frame:METALBLACK
Ripiani interni - Inner shelves:METALSILVER

SOFT ROCK 150 - HORIZONTAL

Porta CD/DVD per 426 CD (e/o 194 DVD) a parete
Wall CD/DVD Rack for 426 CD (and or 194 DVD)

ROVERE WENGE' interno-inside: METALSILVER	€ 1.457,50
ROVERE SBIANCATO interno-inside: METALSILVER	€ 1.457,50
ZEBRAN interno-inside: METALSILVER	€ 1.457,50
GRAYWOOD interno-inside: METALSILVER	€ 1.457,50
BLACKWOOD interno-inside: METALSILVER	€ 1.457,50
COCCO TESTA MORO(pelle - leather) interno-inside: ROSSO CARDINAL	€ 2.768,70
SERPE TESTA MORO(pelle - leather) interno-inside: ROSSO CARDINAL	€ 2.768,70
STRUZZO CREMA(pelle - leather) interno-inside: ITALIAN COFFEE	€ 2.768,70
TUTTI LACCATI-all laquering interno-inside: TUTTI LACCATI-all laquering	€ 1.531,20

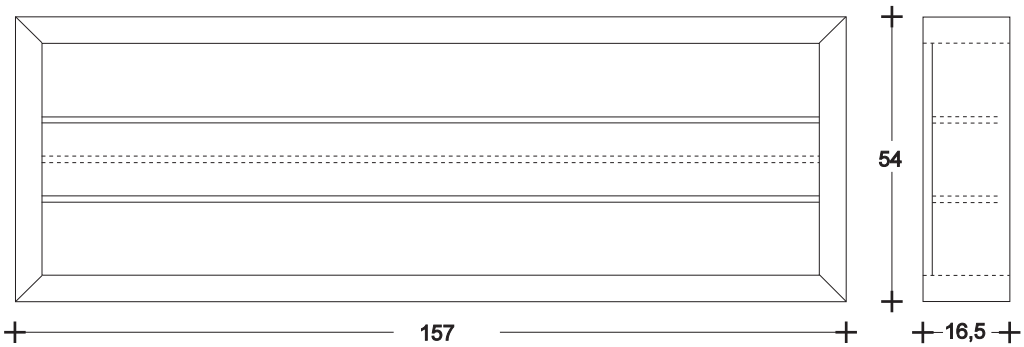

SOFT ROCK 200 - HORIZONTAL

Porta CD/DVD per 555 CD (e/o 254 DVD) a parete
Wall CD/DVD Rack for 555 CD (and or 254 DVD)

ROVERE WENGE' interno-inside: METALSILVER	€ 1.628,00
ROVERE SBIANCATO interno-inside: METALSILVER	€ 1.628,00
ZEBRAN interno-inside: METALSILVER	€ 1.628,00
GRAYWOOD interno-inside: METALSILVER	€ 1.628,00
BLACKWOOD interno-inside: METALSILVER	€ 1.628,00
COCCO TESTA MORO(pelle - leather) interno-inside: ROSSO CARDINAL	€ 3.187,80
SERPE TESTA MORO(pelle - leather) interno-inside: ROSSO CARDINAL	€ 3.187,80
STRUZZO CREMA(pelle - leather) interno-inside: ITALIAN COFFEE	€ 3.187,80
TUTTI LACCATI-all laquering interno-inside: TUTTI LACCATI-all laquering	€ 1.697,30

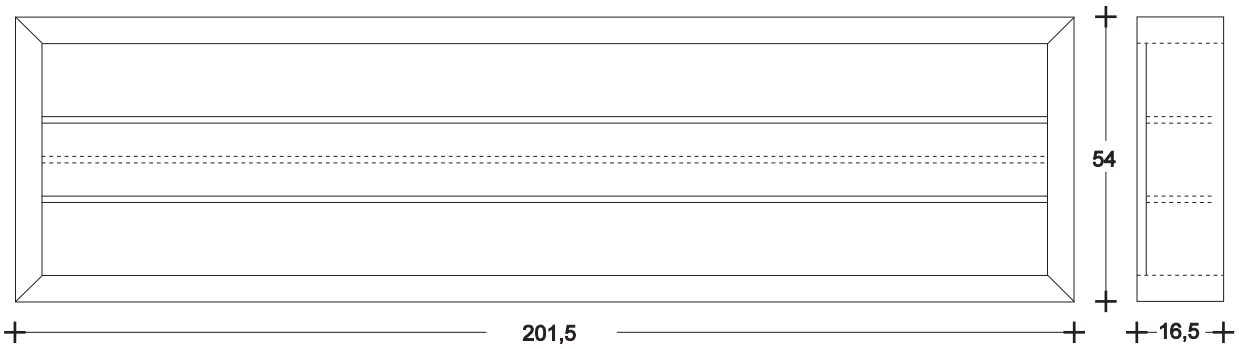

SOFT ROCK 200 - VERTICAL

Porta CD/DVD per 546 CD (e/o 250 DVD) a parete
Wall CD/DVD Rack for 546 CD (and or 250 DVD)

ROVERE WENGE' interno-inside: METALSILVER	**€ 1.593,90**
ROVERE SBIANCATO interno-inside: METALSILVER	**€ 1.593,90**
ZEBRAN interno-inside: METALSILVER	**€ 1.593,90**
GRAYWOOD interno-inside: METALSILVER	**€ 1.593,90**
BLACKWOOD interno-inside: METALSILVER	**€ 1.593,90**
COCCO TESTA MORO(pelle - leather) interno-inside: ROSSO CARDINAL	**€ 3.103,10**
SERPE TESTA MORO(pelle - leather) interno-inside: ROSSO CARDINAL	**€ 3.103,10**
STRUZZO CREMA(pelle - leather) interno-inside: ITALIAN COFFEE	**€ 3.103,10**
TUTTI LACCATI-all laquering interno-inside: Tutti i laccati-all laquering	**€ 1.784,20**

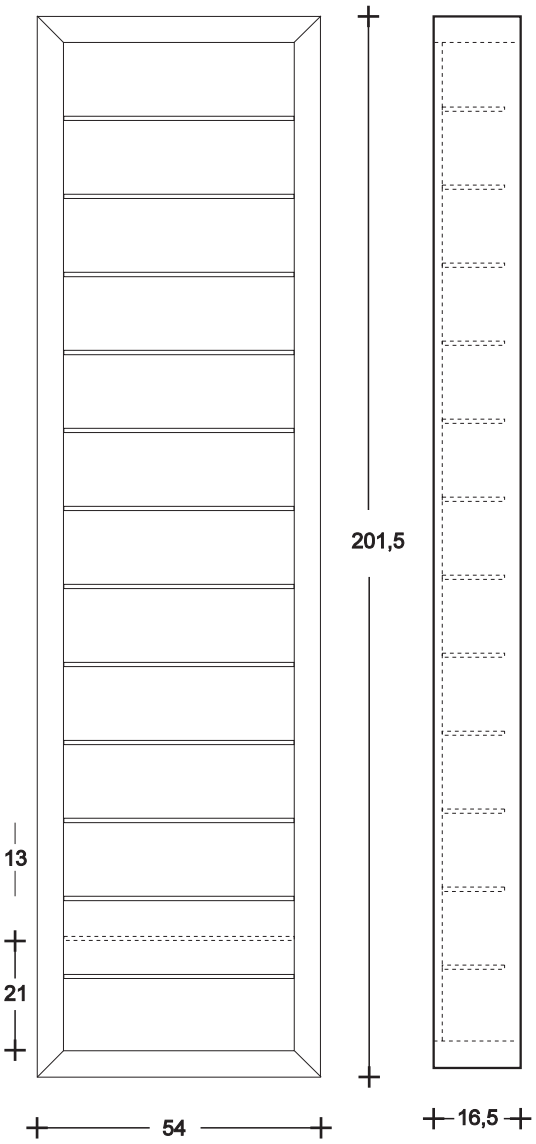

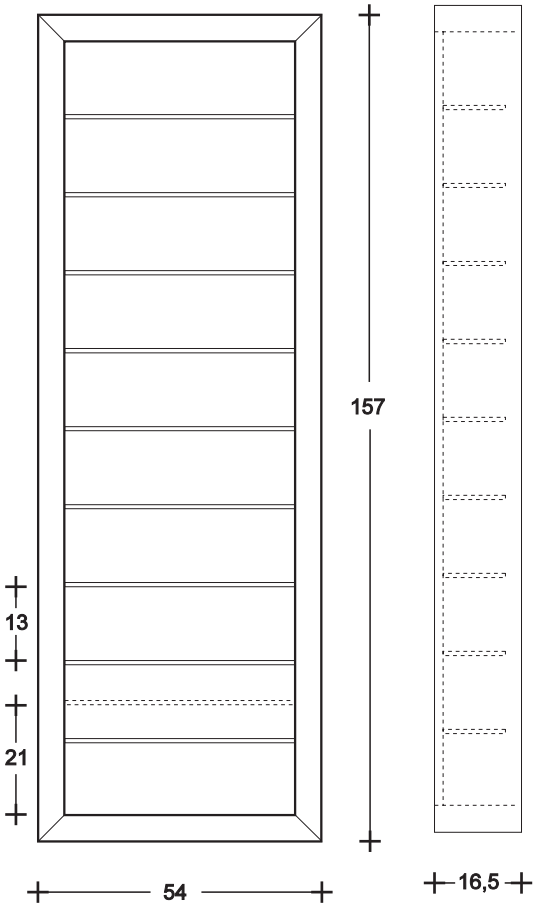

SOFT ROCK 150 - VERTICAL

Porta CD/DVD per 426 CD (e/o 192 DVD) a parete
CD/DVD-rack for 426 CD (and or 192 DVD)

ROVERE WENGE' interno-inside: METALSILVER	**€ 1.442,10**
ROVERE SBIANCATO interno-inside: METALSILVER	**€ 1.442,10**
ZEBRAN interno-inside: METALSILVER	**€ 1.442,10**
GRAYWOOD interno-inside: METALSILVER	**€ 1.442,10**
BLACKWOOD interno-inside: METALSILVER	**€ 1.442,10**
COCCO TESTA MORO(pelle - leather) interno-inside: ROSSO CARDINAL	**€ 2.780,80**
SERPE TESTA MORO(pelle - leather) interno-inside: ROSSO CARDINAL	**€ 2.780,80**
STRUZZO CREMA(pelle - leather) interno-inside: ITALIAN COFFEE	**€ 2.780,80**
TUTTI LACCATI-all laquering interno-inside: Tutti i laccati-all laquering	**€ 1.530,10**

REVOLVING - SOFT ROCK

Porta CD/DVD rotante per 840 CD (e/o 384 DVD)
Revolving CD/DVD Rack for 840 CD (and or 384 DVD)

ROVERE WENGE' interno-inside: METALSILVER	**€ 2.543,20**
ROVERE SBIANCATO interno-inside: METALSILVER	**€ 2.543,20**
ZEBRAN interno-inside: METALSILVER	**€ 2.543,20**
GRAYWOOD interno-inside: METALSILVER	**€ 2.543,20**
BLACKWOOD interno-inside: METALSILVER	**€ 2.543,20**
COCCO TESTA MORO(pelle - leather) interno-inside: ROSSO CARDINAL	**€ 5.034,70**
SERPE TESTA MORO(pelle - leather) interno-inside: ROSSO CARDINAL	**€ 5.034,70**
STRUZZO CREMA(pelle - leather) interno-inside: ITALIAN COFFEE	**€ 5.034,70**
TUTTI LACCATI-all laquering interno-inside: Tutti i laccati-all laquering	**€ 2.695,00**

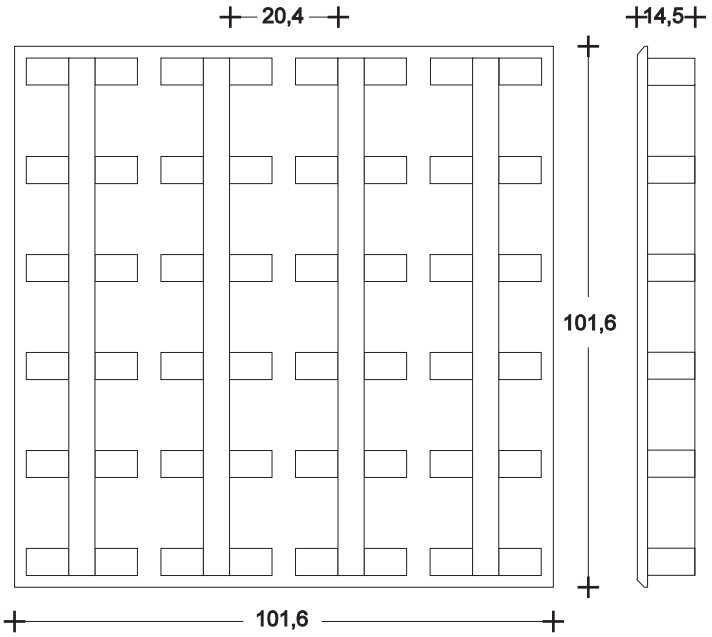

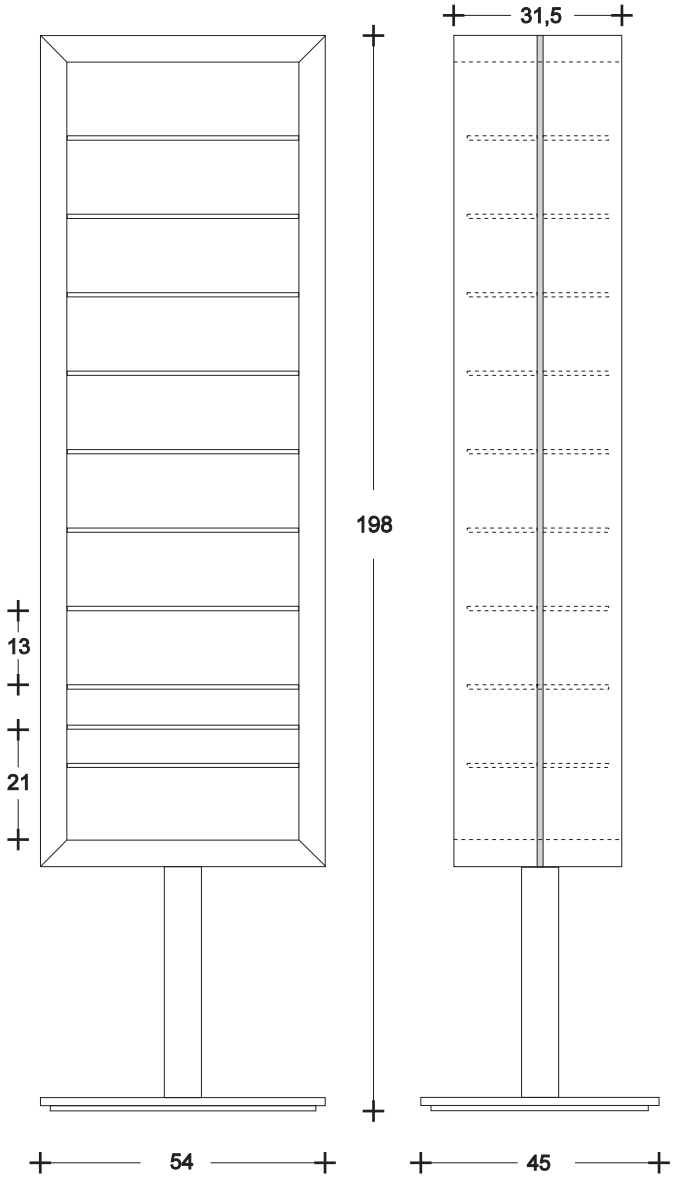

TEN - 430

Porta CD/DVD a parete per 430 CD (e/o 180 DVD)
CD/DVD-rack for 430 CD (and or 180 DVD)

ROVERE WENGE' Schiena - Back: ROSSO CARDINAL	**€ 1.657,70**
ROVERE SBIANCATO Schiena - Back: METALSILVER	**€ 1.657,70**
ZEBRAN Schiena - Back: ITALIAN COFFEE	**€ 1.657,70**
BLACKWOOD Schiena - Back: METALSILVER	**€ 1.657,70**
GRAYWOOD Schiena - Back: METALSILVER	**€ 1.657,70**
NOCE Schiena - Back: METALSILVER	**€ 1.657,70**
METALSILVER Schiena - Back: METALTITANIO/ROSSO CARDINAL	**€ 1.657,70**

TEN - 506

Porta CD/DVD a parete per 506 CD (e/o 297 DVD)
CD/DVD-rack for 506 CD (and or 297 DVD)

ROVERE WENGE' Schiena - Back: ROSSO CARDINAL	**€ 1.611,50**
ROVERE SBIANCATO Schiena - Back: METALSILVER	**€ 1.611,50**
ZEBRAN Schiena - Back: ITALIAN COFFEE	**€ 1.611,50**
BLACKWOOD Schiena - Back: METALSILVER	**€ 1.611,50**
GRAYWOOD Schiena - Back: METALSILVER	**€ 1.611,50**
NOCE Schiena - Back: METALSILVER	**€ 1.611,50**
METALSILVER Schiena - Back: METALTITANIO/ROSSO CARDINAL	**€ 1.821,60**

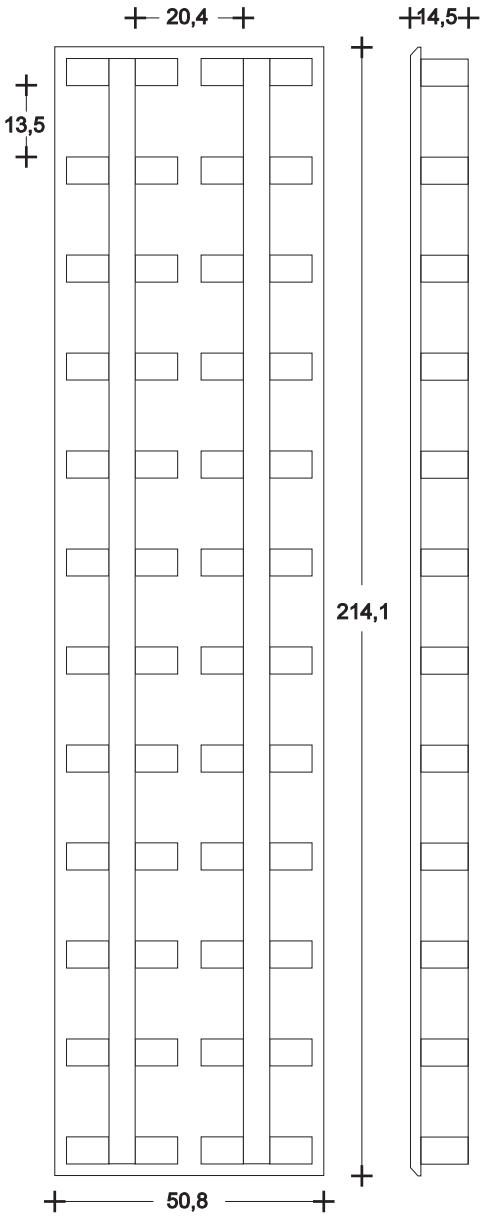

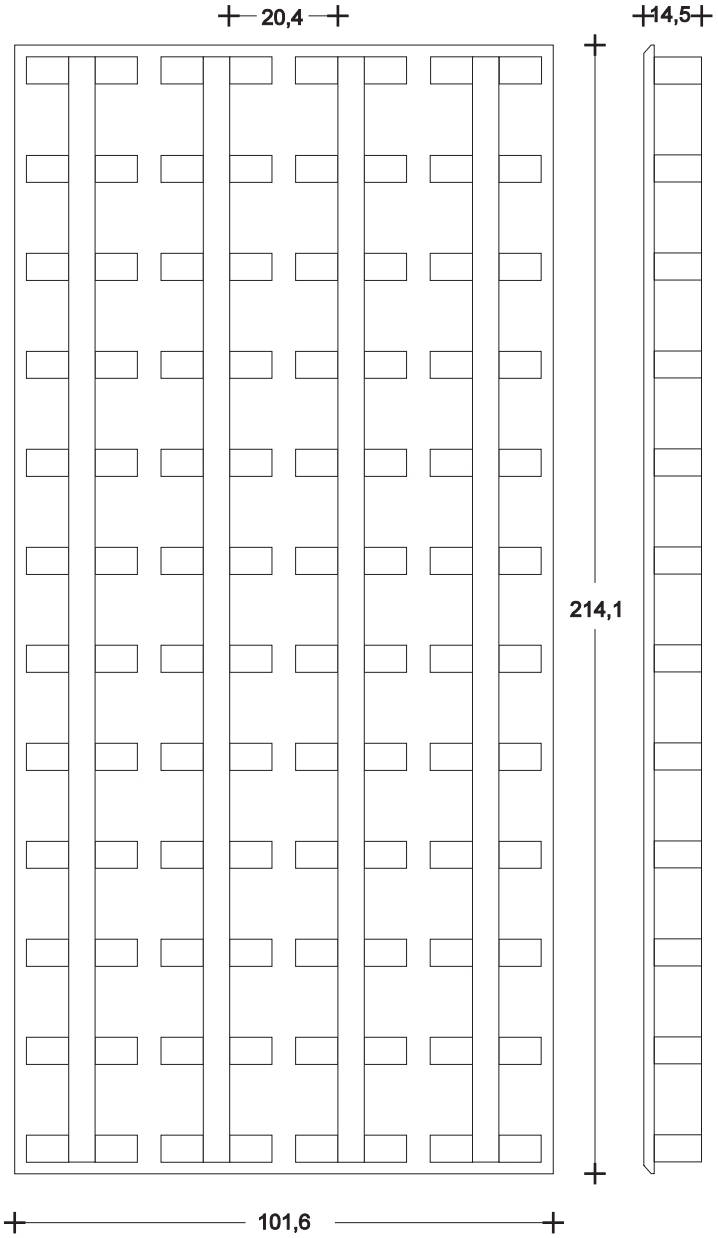

TEN - 946

Porta CD/DVD a parete per 946 CD (e/o 495 DVD)
CD/DVD-rack for 946 CD (and or 495 DVD)

ROVERE WENGE' Schiena - Back: ROSSO CARDINAL	**€ 2.833,60**
ROVERE SBIANCATO Schiena - Back: METALSILVER	**€ 2.833,60**
ZEBRAN Schiena - Back: ITALIAN COFFEE	**€ 2.833,60**
BLACKWOOD Schiena - Back: METALSILVER	**€ 2.833,60**
GRAYWOOD Schiena - Back: METALSILVER	**€ 2.833,60**
NOCE Schiena - Back: METALSILVER	**€ 2.833,60**
METALSILVER Schiena - Back: METALTITANIO/ROSSO CARDINAL	**€ 3.117,40**

OTHELLO DVD

Elemento porta DVD a parete per 81 DVD
Wall DVD rack for 81 DVD

Laccato vari colori con piedini e ripiani color alluminio.
Lacquered in various colours with aluminium coloured feet and shelves

GIALLO PEPERONE	**€ 1.210,00**
BLU OCEANO	**€ 1.210,00**
BLU OLTREMARE	**€ 1.210,00**
VERDE CANNETO	**€ 1.210,00**
ROSSO VERMIGLIO	**€ 1.210,00**
BLU ELETTRICO	**€ 1.210,00**
VERDE LIMONE	**€ 1.210,00**
GIALLO CADMIO	**€ 1.210,00**
ALLUMINIO - ALUMINIUM	**€ 1.335,40**
VIOLETTO COBALTO mix METALTITANIO	**€ 1.335,40**
ALLUMINIO mix METALTITANIO	**€ 1.265,00**

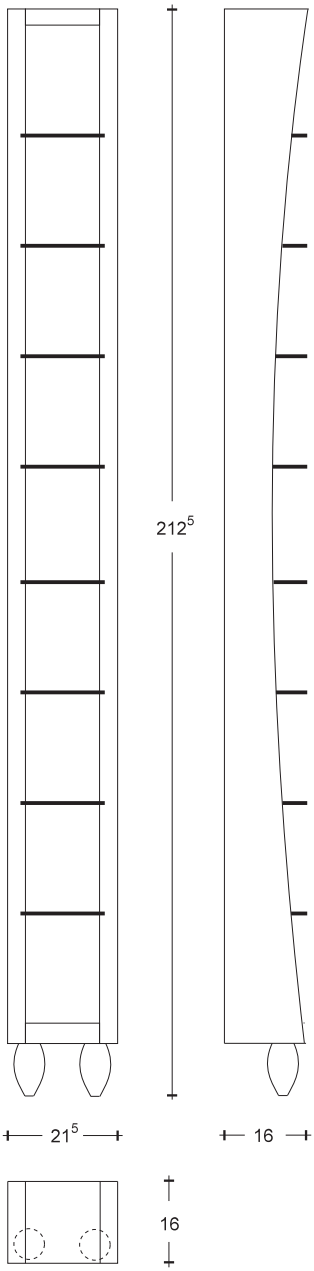

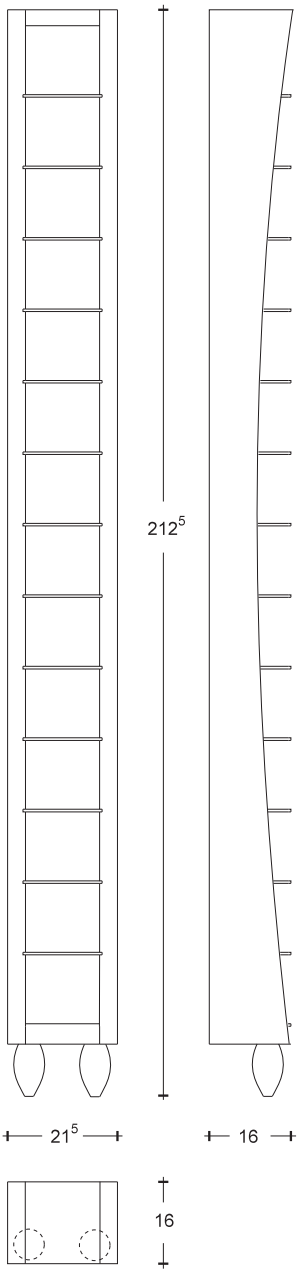

OTHELLO CD

Elemento porta CD a parete per 196 CD.
CD rack for 196 CD

Laccato vari colori con piedini e ripiani color alluminio.
Lacquered in various colours with aluminium coloured feet and shelves

GIALLO PEPERONE	**€ 1.210,00**
BLU OCEANO	**€ 1.210,00**
BLU OLTREMARE	**€ 1.210,00**
VERDE CANNETO	**€ 1.210,00**
ROSSO VERMIGLIO	**€ 1.210,00**
BLU ELETTRICO	**€ 1.210,00**
VERDE LIMONE	**€ 1.210,00**
GIALLO CADMIO	**€ 1.210,00**
ALLUMINIO - ALUMINIUM	**€ 1.335,40**
VIOLETTO COBALTO mix METALTITANIO	**€ 1.335,40**
ALLUMINIO mix METALTITANIO	**€ 1.265,00**

SUPEROTHELLO DVD

Elemento porta DVD a parete per 198 DVD
Wall DVD rack for 198 DVD or VHS

Laccato vari colori con piedini e ripiani color alluminio.
Lacquered in various colours with aluminium coloured feet and shelves.

GIALLO PEPERONE	€ 1.479,50
BLU OCEANO	€ 1.479,50
BLU OLTREMARE	€ 1.479,50
VERDE CANNETO	€ 1.479,50
ROSSO VERMIGLIO	€ 1.479,50
BLU ELETTRICO	€ 1.479,50
VERDE LIMONE	€ 1.479,50
GIALLO CADMIO	€ 1.479,50
ALLUMINIO - ALUMINIUM	€ 1.552,10
VIOLETTO COBALTO mix METALTITANIO	€ 1.552,10
ALLUMINIO mix METALTITANIO	€ 1.552,10

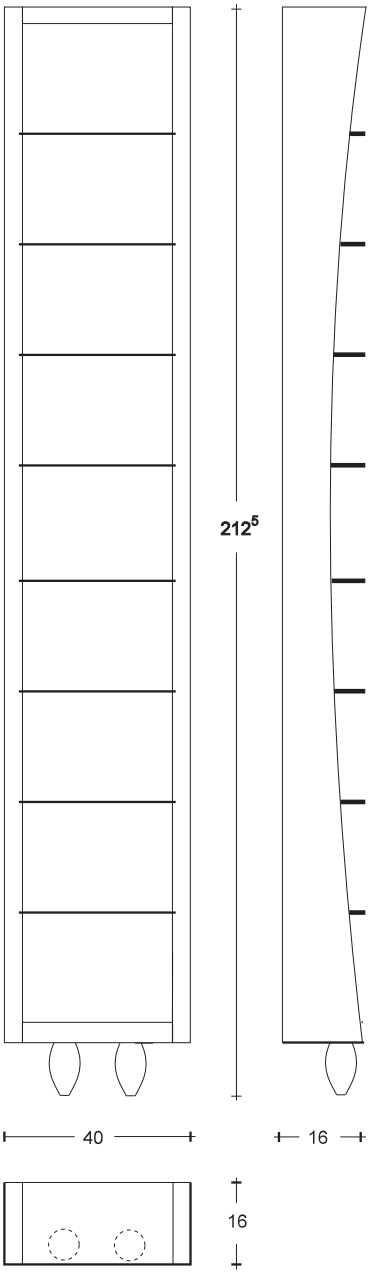

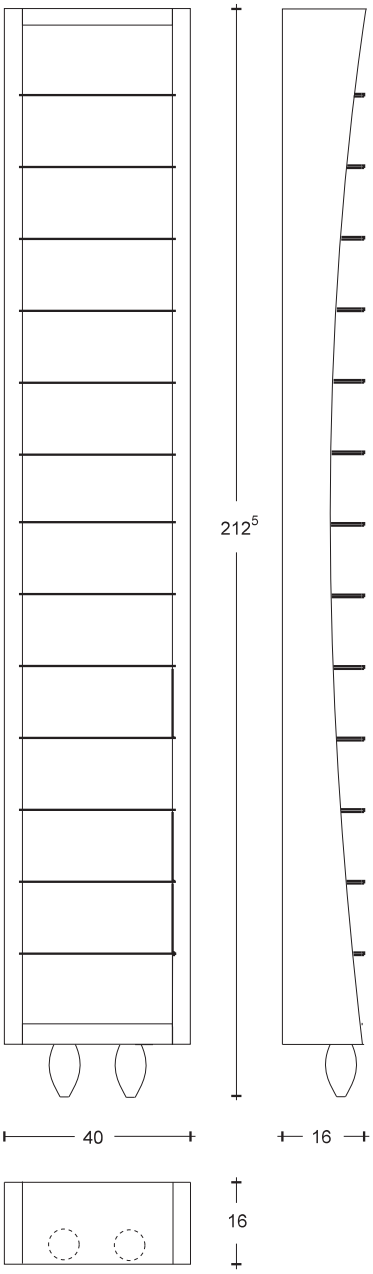

SUPEROTHELLO CD

Elemento porta CD a parete per 462 CD.
CD rack for 462 CD

Laccato vari colori con piedini e ripiani color alluminio.
Lacquered in various colours with aluminium coloured feet and shelves

GIALLO PEPERONE	€ 1.479,50
BLU OCEANO	€ 1.479,50
BLU OLTREMARE	€ 1.479,50
VERDE CANNETO	€ 1.479,50
ROSSO VERMIGLIO	€ 1.479,50
BLU ELETTRICO	€ 1.479,50
VERDE LIMONE	€ 1.479,50
GIALLO CADMIO	€ 1.479,50
ALLUMINIO - ALUMINIUM	€ 1.552,10
VIOLETTO COBALTO mix METALTITANIO	€ 1.552,10
ALLUMINIO mix METALTITANIO	€ 1.552,10

DVD BOX BY BOX- 218

Elemento porta DVD a parete per 344 DVD (e/o CD)
Wall DVD rack for 344 DVD (and or CD)

NOCE - WALLNUT (sfere colorate - multicolour balls)	€ 2.282,50
CANALETTO (dark walnut) (sfere alluminio - aluminium balls)	€ 2.421,10
VERDE CANNETO (sfere colorate - multicolour balls)	€ 2.269,30
DELFINO (sfere colorate - multicolour balls)	€ 2.269,30
GIALLO CADMIO (sfere colorate - multicolour balls)	€ 2.269,30
BLU OLTREMARE (sfere colorate - multicolour balls)	€ 2.269,30
ALLUMINIO (sfere colorate - multicolour balls)	€ 2.454,10

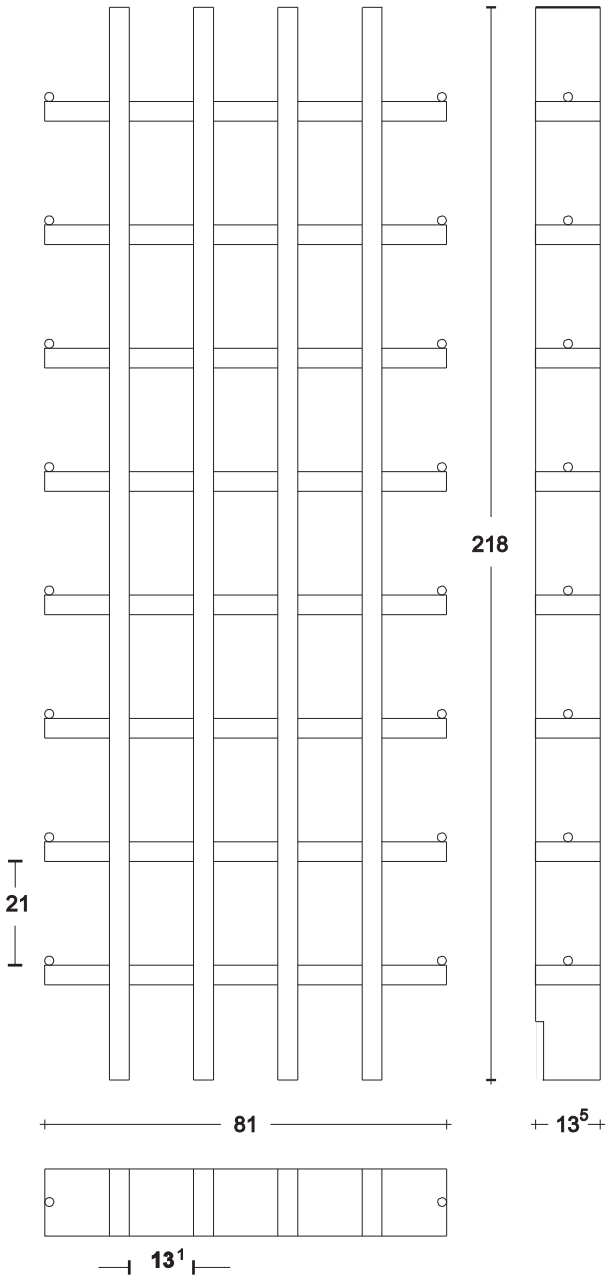

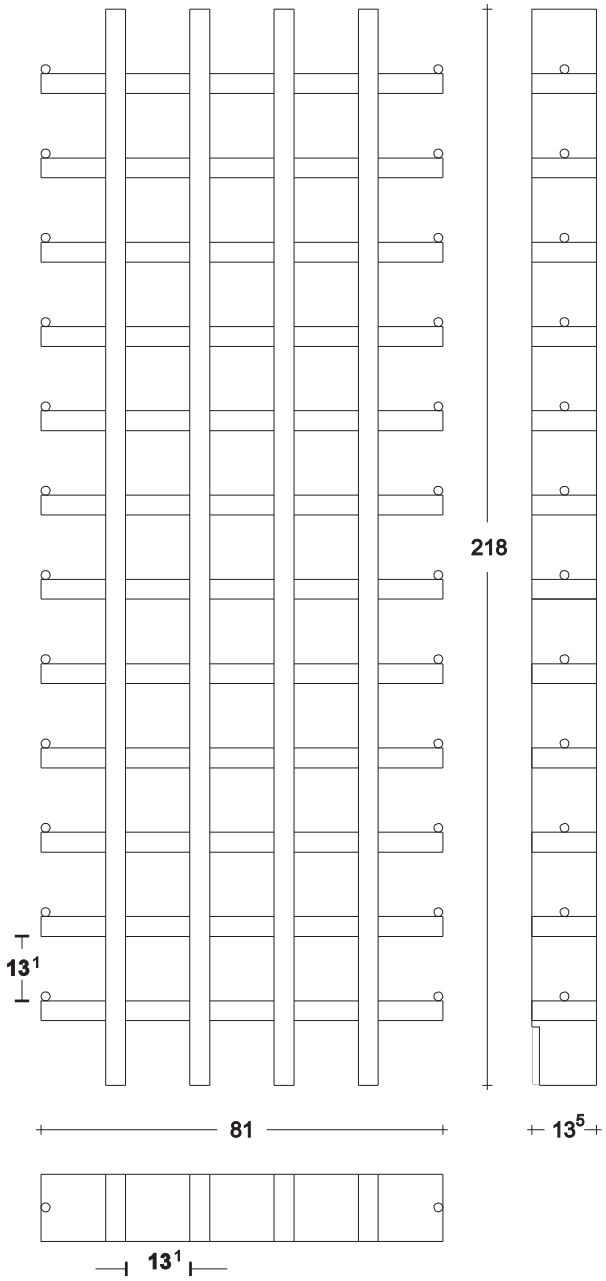

BOX BY BOX- 218

Elemento porta CD a parete per 696 CD
Wall CD rack for 696 CD

NOCE - WALLNUT (sfere colorate - multicolour balls)	€ 2.406,80
CANALETTO (dark walnut) (sfere alluminio - aluminium balls)	€ 2.547,60
VERDE CANNETO (sfere colorate - multicolour balls)	€ 2.439,80
DELFINO (sfere colorate - multicolour balls)	€ 2.439,80
GIALLO CADMIO (sfere colorate - multicolour balls)	€ 2.439,80
BLU OLTREMARE (sfere colorate - multicolour balls)	€ 2.439,80
ALLUMINIO (sfere colorate - multicolour balls)	€ 2.580,60
VIOLETTO COBALTO mix METALTITANIO (sfere alluminio - aluminium balls)	€ 2.707,10
ALLUMINIO mix METALTITANIO (sfere alluminio - aluminium balls)	€ 2.707,10

BOX BY BOX- 98

Elemento porta CD a parete per 350 CD
Wall CD rack for 350 CD

NOCE - WALLNUT (sfere colorate - multicolour balls)	**€ 1.516,90**
CANALETTO (dark walnut) (sfere alluminio - aluminium balls)	**€ 1.600,50**
VERDE CANNETO (sfere colorate - multicolour balls)	**€ 1.549,90**
DELFINO (sfere colorate - multicolour balls)	**€ 1.549,90**
GIALLO CADMIO (sfere colorate - multicolour balls)	**€ 1.549,90**
BLU OLTREMARE (sfere colorate - multicolour balls)	**€ 1.549,90**
ALLUMINIO (sfere colorate - multicolour balls)	**€ 1.619,20**
VIOLETTO COBALTO mix METALTITANIO (sfere alluminio - aluminium balls)	**€ 1.697,30**
ALLUMINIO mix METALTITANIO (sfere alluminio - aluminium balls)	**€ 1.697,30**

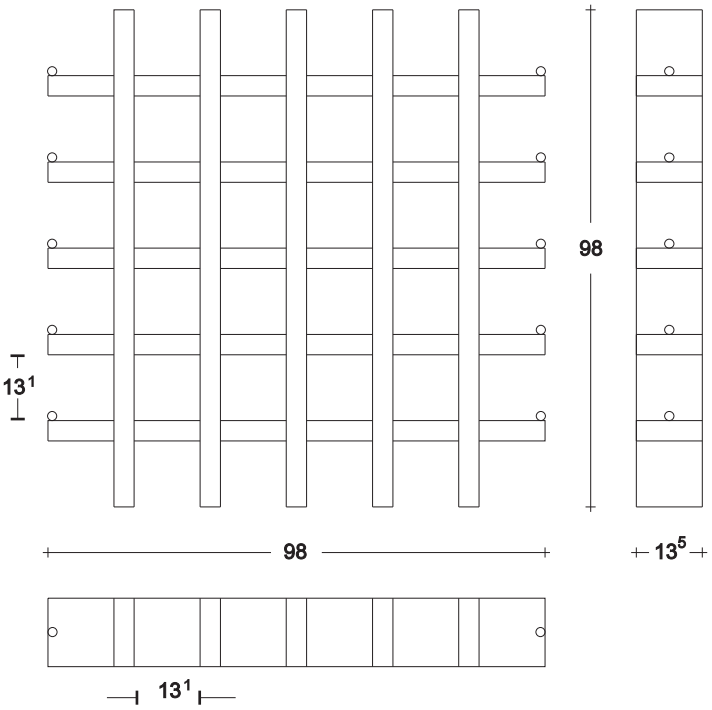

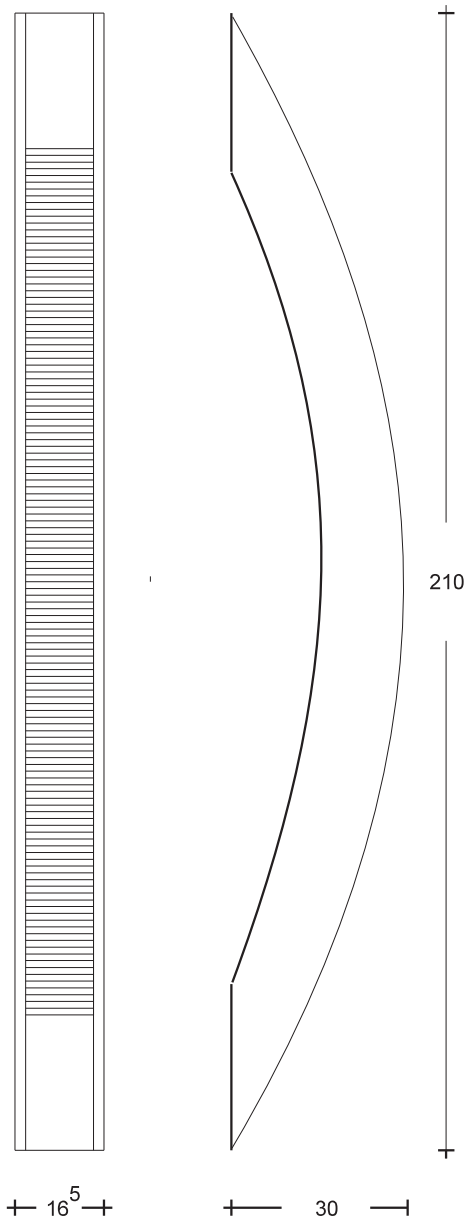

COMMA

Elemento porta cassette CD a parete per 128 CD
Wall CD rack for 128 CD

VERDE SALVIA	**€ 1.309,00**
VERDE CANNETO	**€ 1.309,00**
GIALLO CADMIO	**€ 1.309,00**
PESCA CHIARA	**€ 1.309,00**
GRIGIO ANTRACITE	**€ 1.309,00**
VERDE ZAFFIRO	**€ 1.309,00**
BLU ELETTRICO	**€ 1.309,00**
METALSILVER	**€ 1.442,10**
METALTITANIO	**€ 1.442,10**

REVOLVING TOWER

Porta CD/DVD
CD/DVD rack

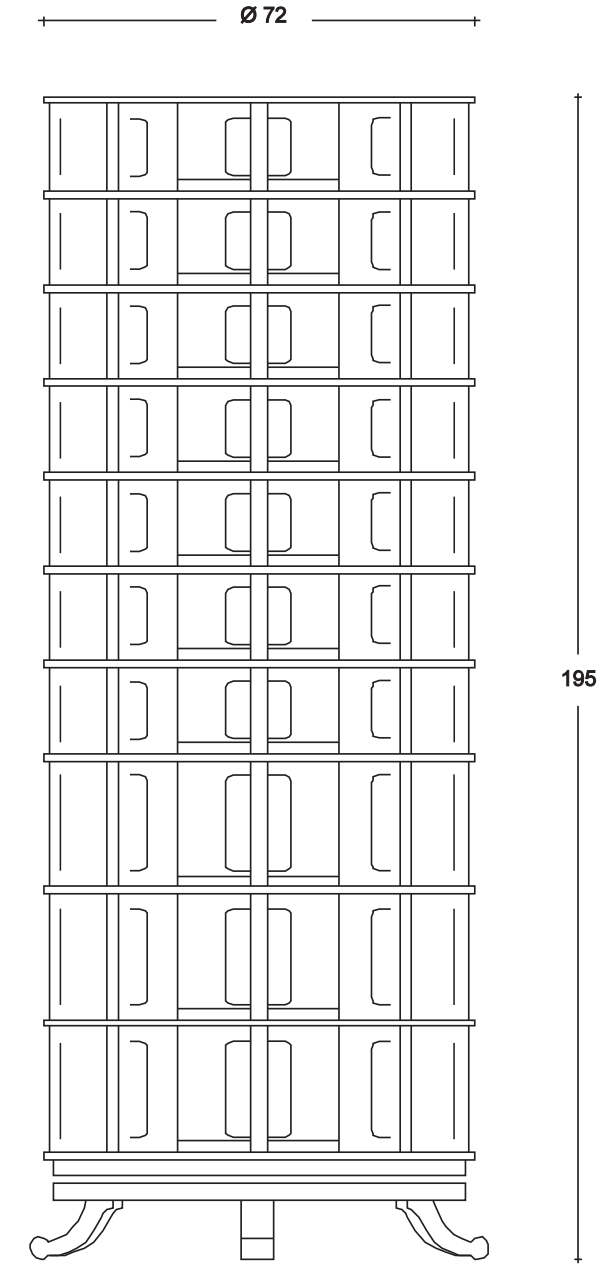

Art. RT.D/CD (standard)
Revolving Tower composta da 3 vassoi per DVD
(3 x 72= 216 DVD) + 7 vassoi per CD (7 x 104= 728 CD).
Revolving Tower consisting of 3 trays for DVD
(3 x 72= 216 DVD) + 7 trays for CD (7 x 104= 728 CD)

€ 4.320,80

Art. RT. CD
Revolving Tower composta da 11 vassoi per CD
(11 x 104= 1.144 CD). H. cm. 191,5
Revolving Tower consisting of 11 trays for CD
(11 x 104= 1.144 CD) H. cm. 191,5

€ 4.480,30

Art. RT. DVD
Revolving Tower composta da 8 vassoi per DVD
(8 x 72= 576 DVD). H. cm. 196,5
Revolving Tower consisting of 8 trays for DVD
(8 x 72= 576 DVD). H. cm. 196,5

€ 4.272,40

Finiture standard/ Standard finishings
vassoi-trays:AZZURRO CIELO
fianchi-sides: METALSILVER

vassoi-trays:ALLUMINIO
fianchi-sides: METALPIOMBO

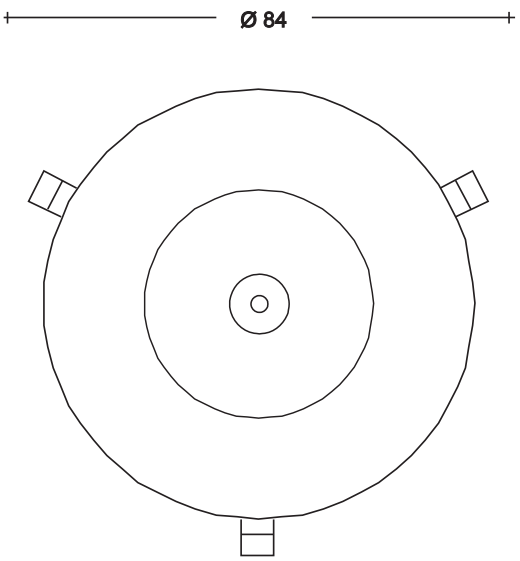

colori laccati a richiesta da nostre cartelle
colori senza variazione di prezzo
Lacquering Colours on request according
to our colour-cards without price increase

TOTEM

Elemento porta CD/DVD per 200 CD (e/o 100 DVD)
CD/DVD rack for 200 CD (and or 100 DVD)

VERDE CANNETO + vetro - glass	**€ 1.442,10**
BLU OLTREMARE + vetro - glass	**€ 1.442,10**
PESCA CHIARA + vetro - glass	**€ 1.442,10**
VERDE ZAFFIRO + vetro - glass	**€ 1.442,10**
BORDEAUX ETRUSCO + vetro - glass	**€ 1.442,10**
NERO-BLACK + vetro - glass	**€ 1.442,10**
BIANCO-WHITE + vetro - glass	**€ 1.442,10**
ALLUMINIO-ALUMINIUM + vetro - glass	**€ 1.520,20**

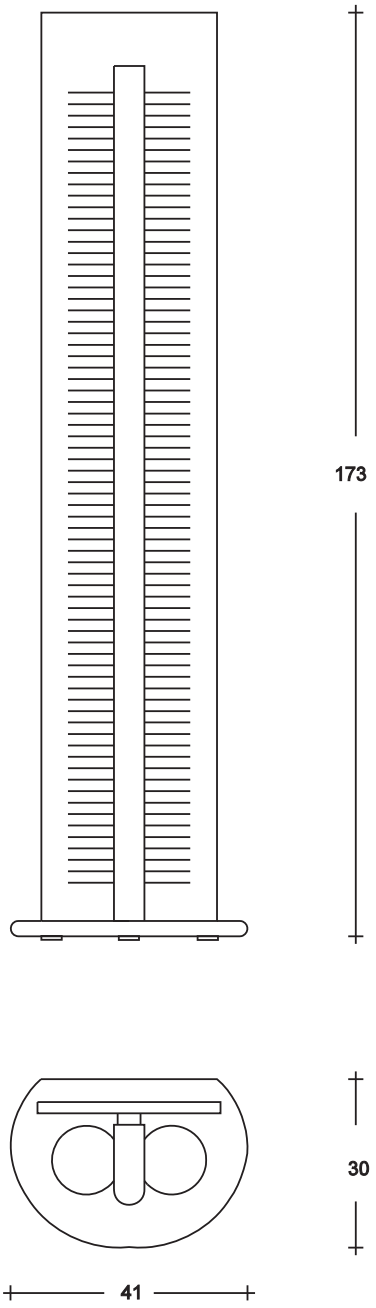

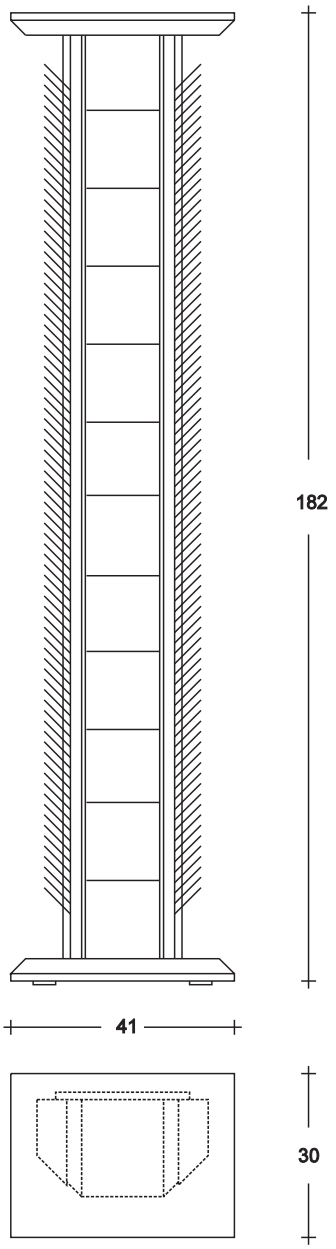

FISCHER

Elemento porta CD per 330 CD.
CD rack for 330 CD

BLU OLTREMARE schiena vetro - crystal back	**€ 1.796,30**
VERDE CANNETO schiena vetro - crystal back	**€ 1.796,30**
PESCA CHIARA schiena vetro - crystal back	**€ 1.796,30**
NERO - BLACK schiena vetro - crystal back	**€ 1.796,30**
BIANCO - WHITE schiena vetro - crystal back	**€ 1.796,30**

MORPHEUS

Porta CD/DVD a parete per 473 CD (e/o DVD)
Wall CD/DVD rack for 473 CD (and or DVD)

Pianetti e particolari color allumini,tendina a rullo cotone sintetico ecru
Aluminium shelves and parts, sliding curtain in synthetic cotton ecru

NOCE - Wallnut	**€ 2.051,50**
NOCE CANALETTO (Noce scuro) Dark wallnut	**€ 2.051,50**
NERO - BLACK	**€ 2.081,20**
CREMA	**€ 2.081,20**
METALSILVER	**€ 2.143,90**
METALTITANIO	**€ 2.143,90**

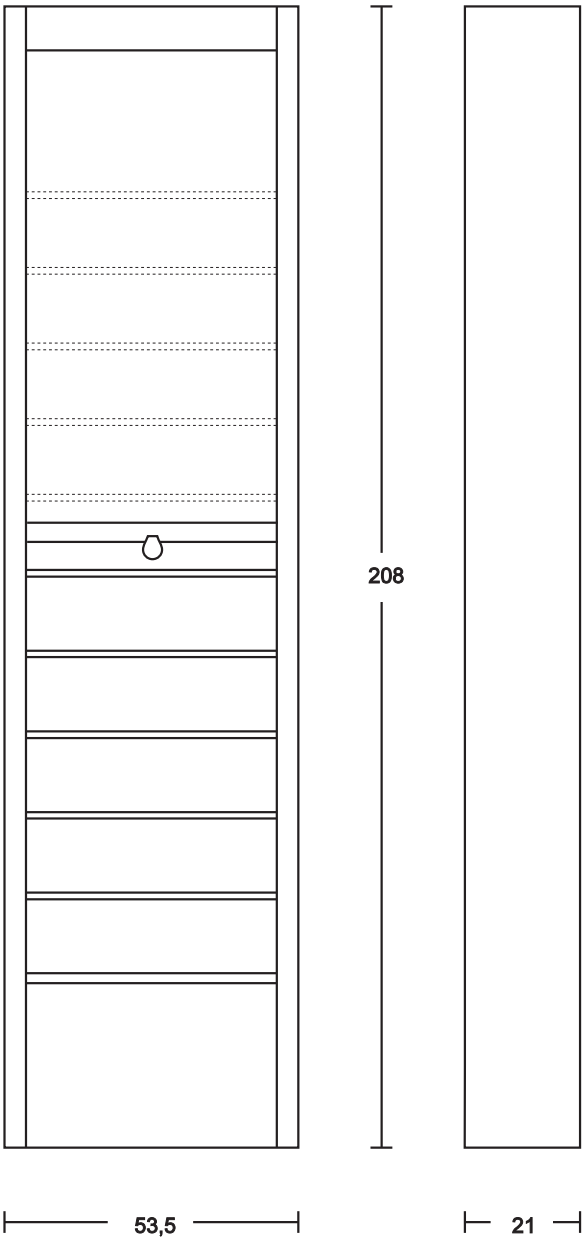

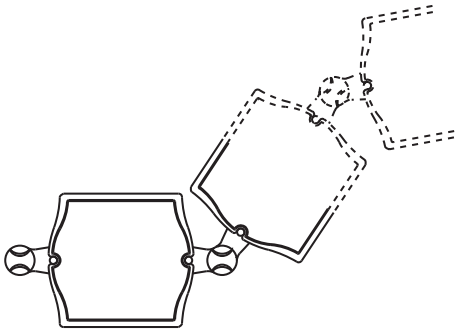

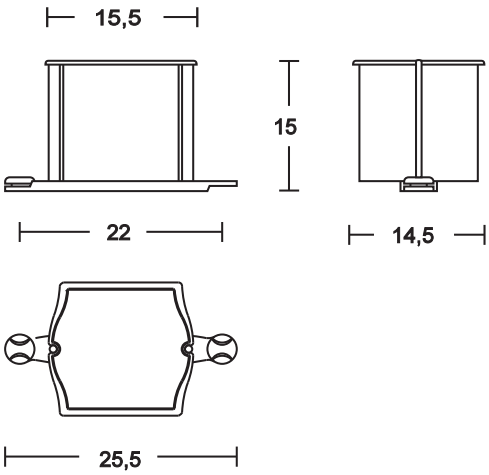

ISOMERO

Porta CD a parete da 11 CD
CD rack for 11 CD - on wall

Basetta orientabile in Nylon color antracite,supporti metallici
vaschetta in Moplen colorato traslucido

Adjustable base in Nylon,anthracite, with metal parts,
Box in coloured and translucent Moplen-materials

BLU - BLUE (13 pezzi - 13 pieces)	**€ 297,00**
ANTRACITE - ANTHRACITE (13 pezzi - 13 pieces)	**€ 297,00**
SALMONE - SALMON (13 pezzi - 13 pieces)	**€ 297,00**
GIALLO - YELLOW (13 pezzi - 13 pieces)	**€ 297,00**

IN CONFEZIONE DA NR. 13 PEZZI PER SINGOLO COLORE
ORDINE MINIMO PER RIVENDITORE NR. 3 CONFEZIONI

EACH PACKAGE INCLUDES NR. 13 PIECES IN ONE COLOUR
MINIMUM ORDER FOR RETAILER: NR. 3 PACKAGES

ODO

Porta CD per 84 CD
CD rack for 84 CD

Pianetti alluminio - aluminium shelves

Multistrato color NOCE Stratified wood - WALNUT colour	**€ 584,10**
Multistrato color CILIEGIO Stratified wood - CHERRY colour	**€ 640,20**
GIALLO CADMIO	**€ 632,50**
ZAFFIRO	**€ 632,50**
GRIGIO ANTRACITE	**€ 632,50**
VERDE LIMONE	**€ 632,50**
ROSSO VERMIGLIO	**€ 632,50**
BLU ELETTRICO	**€ 632,50**
METALSILVER-METALTITANIO-METALBLACK	**€ 689,70**

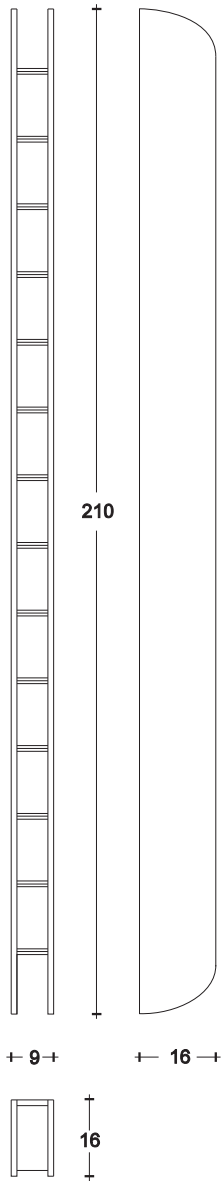

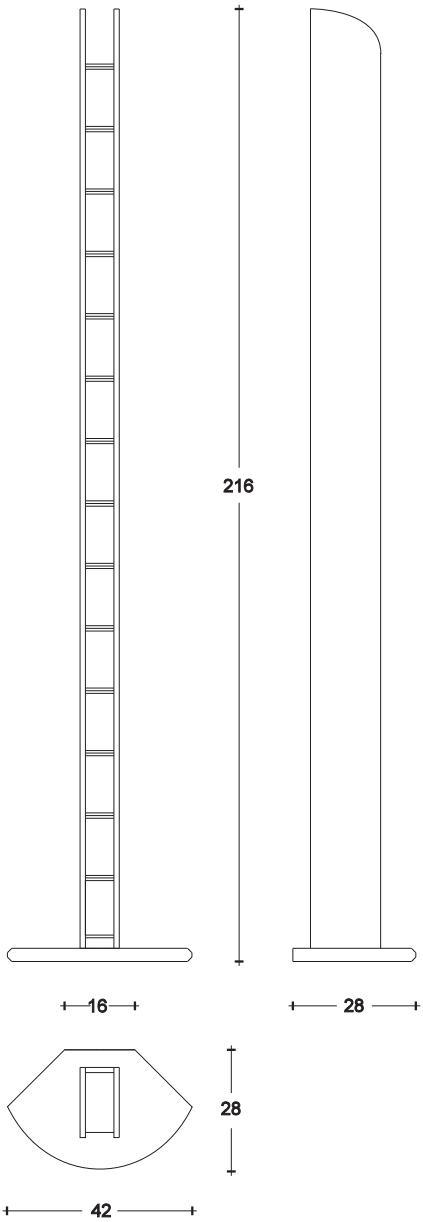

ODO FLOOR

Porta CD per 90 CD
CD rack for 90 CD

Pianetti e base alluminio - shelves + base aluminium

Multistrato color NOCE Stratified wood - WALNUT colour	**€ 821,70**
Multistrato color CILIEGIO Stratified wood - CHERRY colour	**€ 860,20**
GIALLO CADMIO	**€ 853,60**
ZAFFIRO	**€ 853,60**
GRIGIO ANTRACITE	**€ 853,60**
VERDE LIMONE	**€ 853,60**
ROSSO VERMIGLIO	**€ 853,60**
BLU ELETTRICO	**€ 853,60**
METALSILVER-METALTITANIO-METALBLACK	**€ 910,80**

CD REGLO

Elemento porta CD per 67 CD
CD rack for 67 CD

NOCE - NERO (+ cristallo + crystal)	€ 1.310,10
BLU OLTREMARE (+ cristallo + crystal)	€ 1.310,10
PESCA CHIARA (+ cristallo + crystal)	€ 1.310,10
VERDE ZAFFIRO (+ cristallo + crystal)	€ 1.310,10
GIALLO CADMIO (+ cristallo + crystal)	€ 1.310,10
NERO (+ cristallo + crystal)	€ 1.310,10
VERDE CANNETO (+ cristallo + crystal)	€ 1.310,10
ALLUMINIO (+ cristallo + crystal)	€ 1.371,70

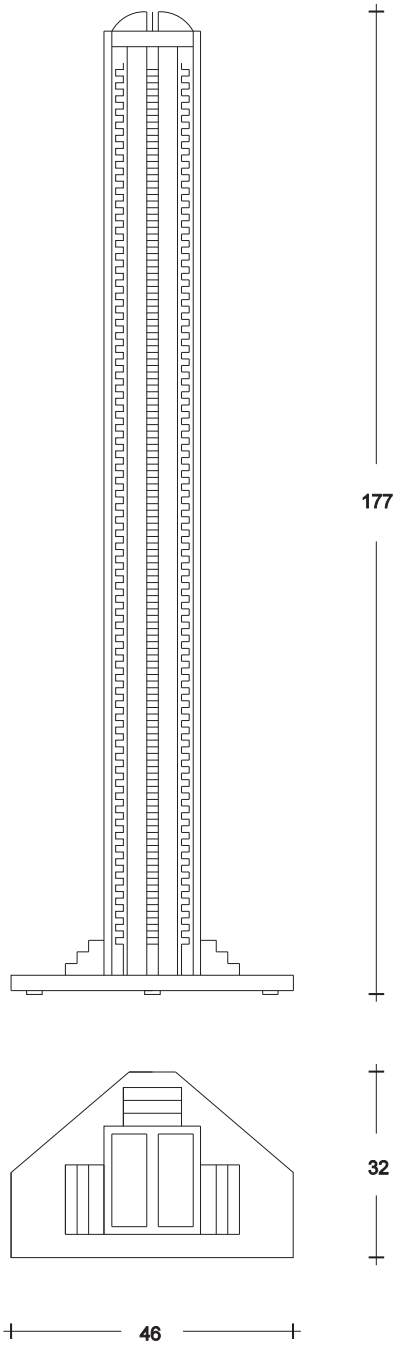

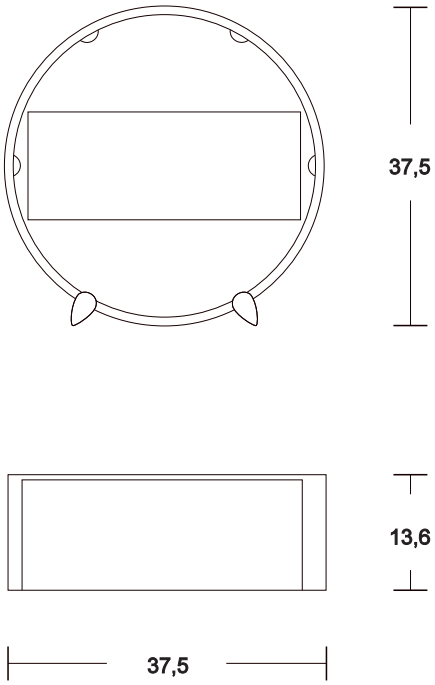

PAPALLA

Porta CD a parete e non da 30 CD
CD rack for 30 CD - on wall as standard

Policarbonato traslucido
Translucid coloured "polycarbonate" material

BLU - BLUE (5 pezzi - 5 pieces)	€ 430,10
BIANCO - WHITE (5 pezzi - 5 pieces)	€ 430,10
ARANCIO - ORANGE (5 pezzi - 5 pieces)	€ 430,10
GIALLO - YELLOW (5 pezzi - 5 pieces)	€ 430,10

IN CONFEZIONE DA NR. 5 PEZZI PER SINGOLO COLORE
ORDINE MINIMO PER RIVENDITORE NR. 2 CONFEZIONI

EACH PACKAGE INCLUDES NR. 5 PIECES IN ONE COLOUR
MINIMUM ORDER FOR RETAILER: NR. 2 PACKAGES

THE SIGN

Elemento porta CD a parete per 105 CD
Wall CD rack for 105 CD

BLU ELETTRICO	**€ 1.057,10**
ALLUMINIO - ALUMINIUM	**€ 1.057,10**
VIOLETTO COBALTO	**€ 1.057,10**
METALTITANIO	**€ 1.057,10**
Laminato: ORO FOGLIA finishing: GOLD-FOIL	**€ 1.379,40**

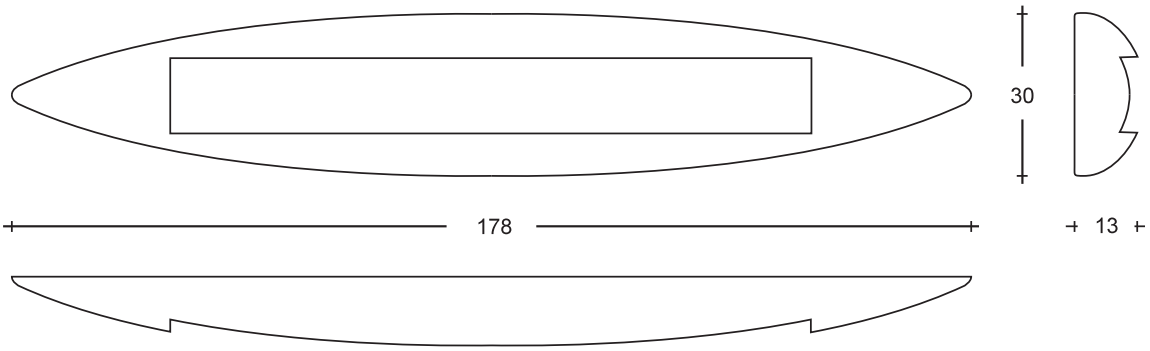

IL DADO

Un prezioso Dado ferma Cd DVD, ferma libri, ferma fogli.
in METALBLACK con 7 CRYSTAL STONES incastonate

A precious, multifunctional Cube: CD-DVD stop, boo-end, paper-weight
in METALBLACK WITH 7 set Crystal Stones.

1 CONFEZIONE DA 10 PEZZI- 1 PACKAGE OF 10 PIECES **€ 878,90**

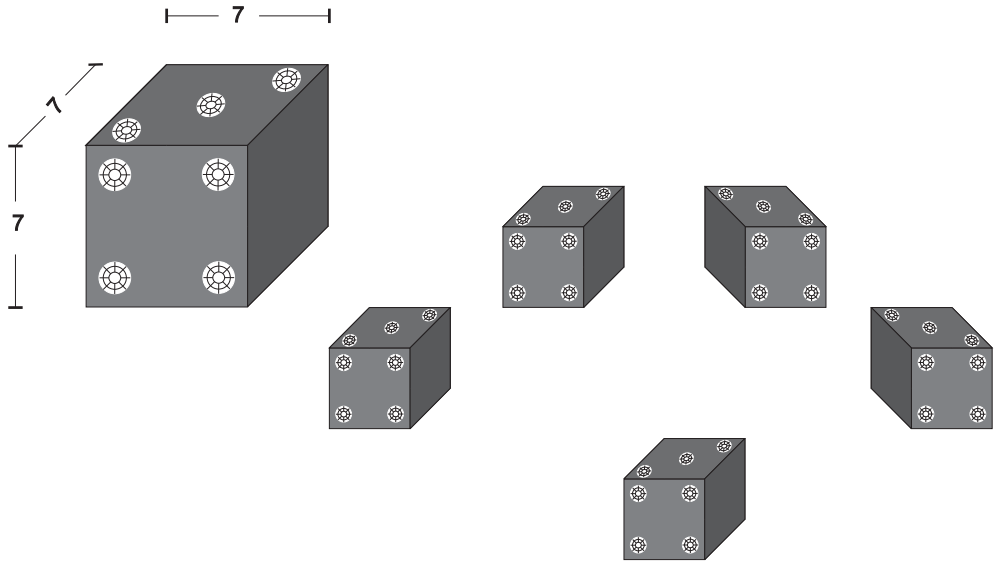

DISKO

Porta CD a parete per 280 CD
Wall CD rack for 280 CD

pianetti color alluminio
Shelves aluminium colour

GIALLO CADMIO	**€ 1.226,50**
ROSSO VERMIGLIO	**€ 1.226,50**
BLU ELETTRICO	**€ 1.226,50**
NERO - BLACK - SCHWARZ	**€ 1.226,50**
ALLUMINIO - ALUMINIUM	**€ 1.353,00**

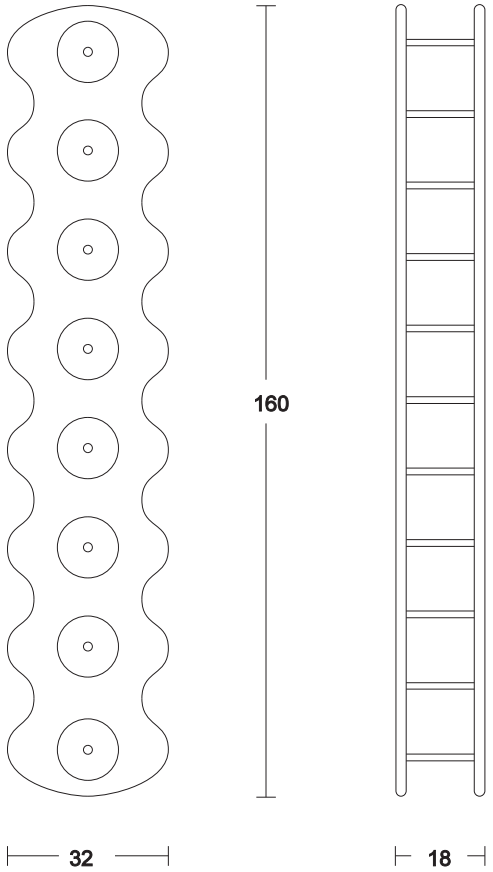

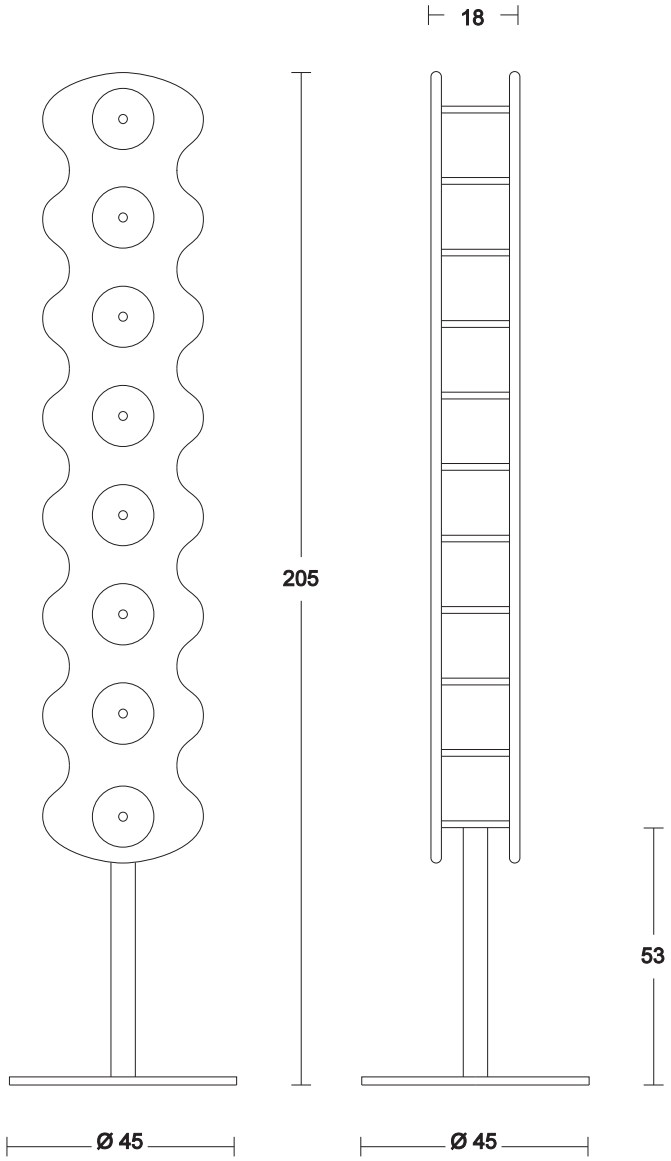

DISKO - FLOOR

Porta CD per 280 CD rotante
Revolving cd rack for 280 CD

pianetti color alluminio
Shelves aluminium colour

GIALLO CADMIO	**€ 1.798,50**
ROSSO VERMIGLIO	**€ 1.798,50**
BLU ELETTRICO	**€ 1.798,50**
NERO - BLACK	**€ 1.798,50**
ALLUMINIO - ALUMINIUM	**€ 1.985,50**

IL TEMPO DELLA MUSICA

Porta CD a parete per 130 CD
Wall CD rack for 130 CD

con vasche di contenimento color ALLUMINIO
Metallic container ALUMINIUM colour

GIALLO CADMIO	€ 932,80
BLU ELETTRICO	€ 932,80
ROSSO VERMIGLIO	€ 932,80
NERO -BLACK	€ 932,80
ALLUMINIO - ALUMINIUM	€ 986,70

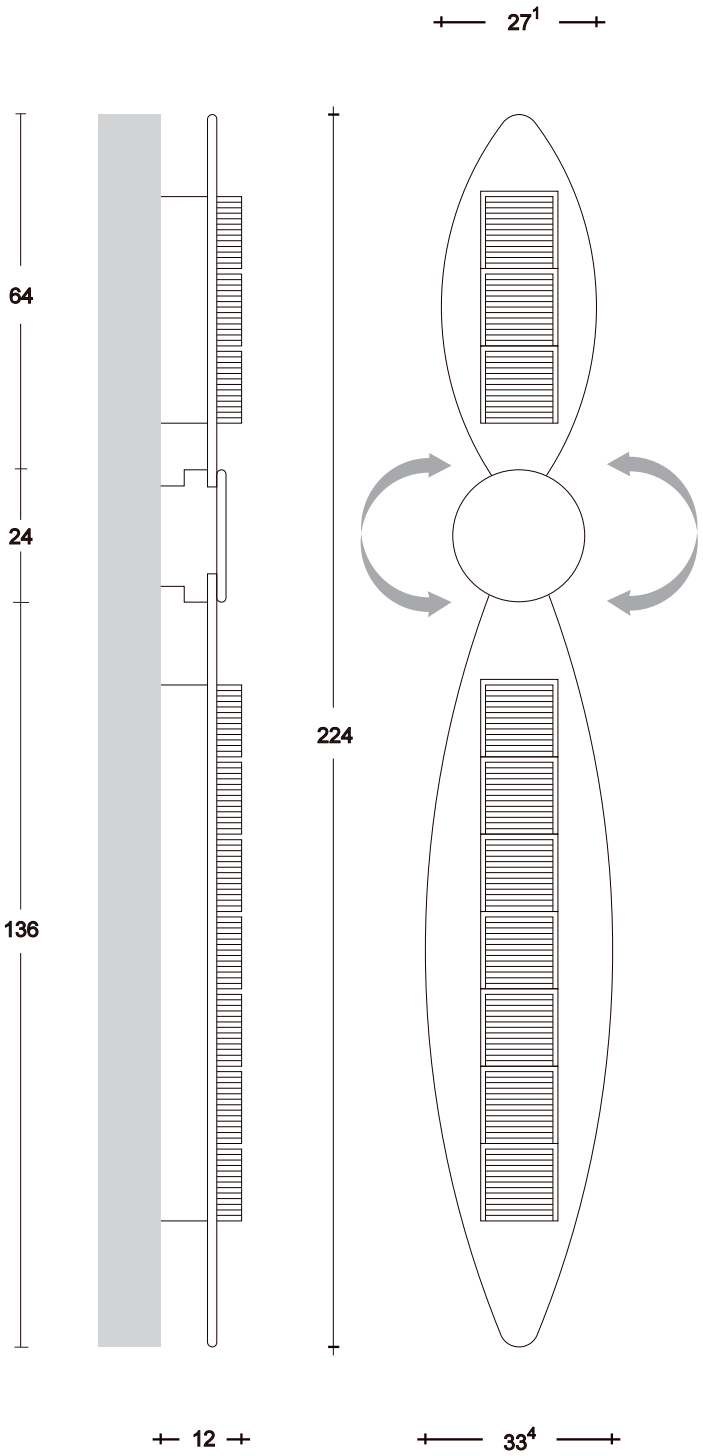

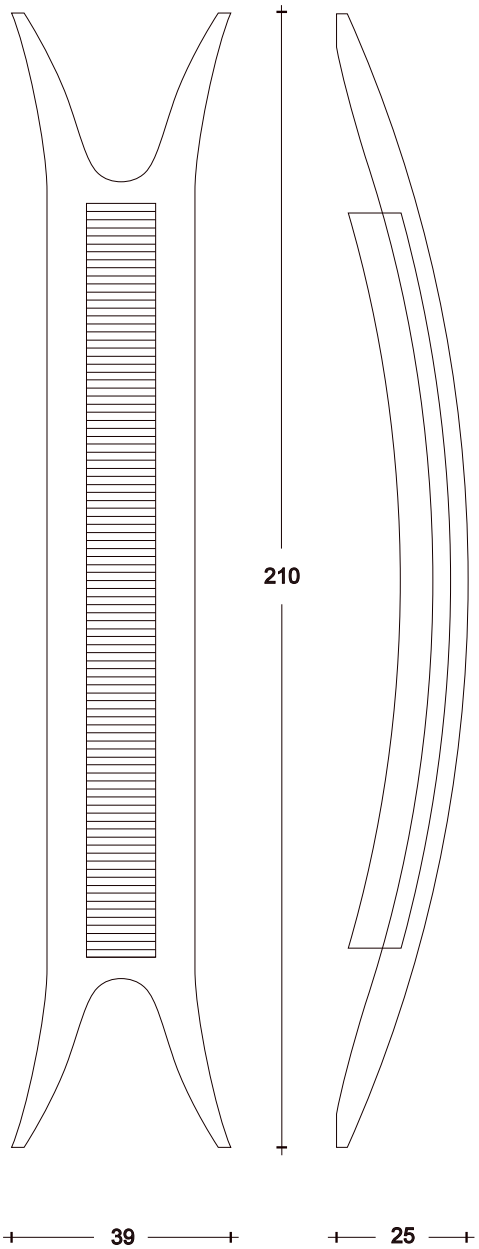

SWEET ANGEL

Porta CD a parete per 90 CD
Wall CD rack for 90 CD

GRIGIO ANTRACITE	€ 1.732,50
VERDE LIMONE	€ 1.732,50
BLU ELETTRICO	€ 1.732,50
ALLUMINIO - ALUMINIUM	€ 1.732,50
METALTITANIO	€ 1.732,50
VIOLETTO COBALTO mix METALTITANIO	€ 1.922,80
laminato ORO FOGLIA - interno METALTITANIO finishing: GOLD-FOIL - inner surface: METALTITANIO	€ 2.580,60

DUNE

sistema a parete
Wall CD rack system

Laccato: VERDE SALVIA-CREMA-GIALLO CADMIO-
Lacquered: DELFINO-GRIGIO ANTRACITE

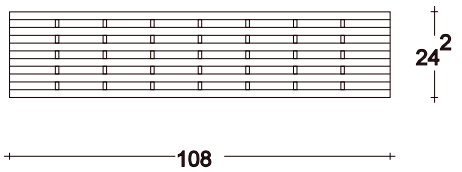

DUNE 80

Elemento porta CD per 80 CD **€ 746,90**
CD rack for 80 CD

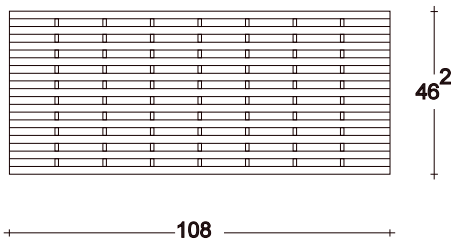

DUNE 160

Elemento porta CD per 160 CD **€ 1.226,50**
CD rack for 160 CD

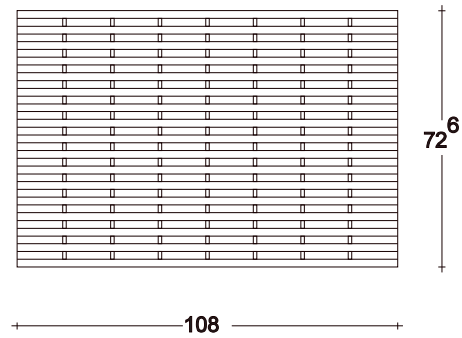

DUNE 256

Elemento porta CD per 256 CD **€ 1.796,30**
CD rack for 256 CD

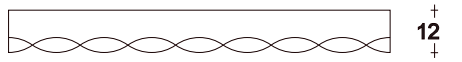

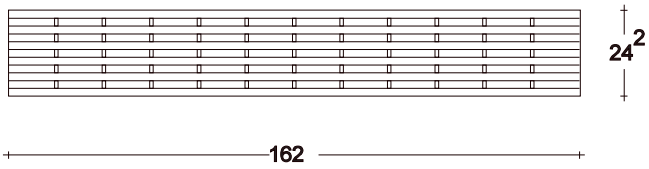

DUNE 120

Elemento porta CD per 120 CD **€ 998,80**
CD rack for 120 CD

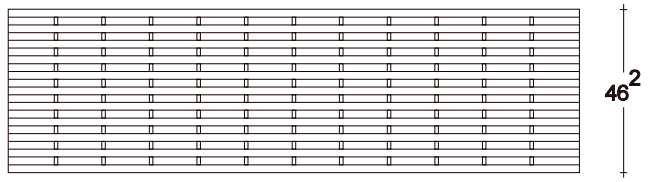

DUNE 240

Elemento porta CD per 240 CD **€ 1.745,70**
CD rack for 240 CD

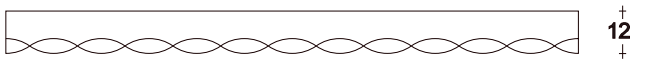

MAGMA

Porta CD per 180 CD
CD rack for 180 CD

Costituito da elementi in MDF e parti in poliuretano
MDF parts and polyurethane parts

VERDE ZAFFIRO	**€ 2.170,30**
BLU ELETTRICO	**€ 2.170,30**
GIALLO CADMIO	**€ 2.170,30**
ROSSO VERMIGLIO	**€ 2.170,30**
VIOLETTO COBALTO	**€ 2.352,90**
ALLUMINIO - ALUMINIUM	**€ 2.352,90**
METALTITANIO mix ALLUMINIO	**€ 2.435,40**
VIOLETTO COBALTO mix METALTITANIO	**€ 2.435,40**
laminato ORO FOGLIA - interno METALTITANIO finishing:GOLD-FOIL - inner surface: METALTITANIO	**€ 3.130,60**

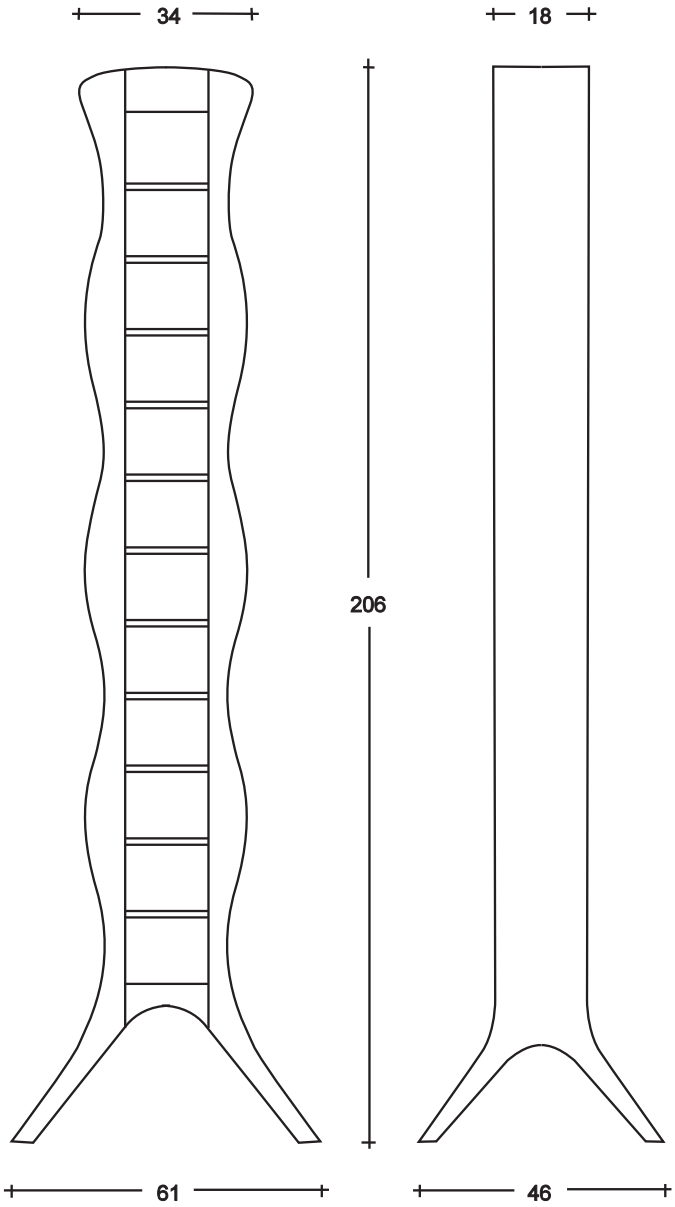

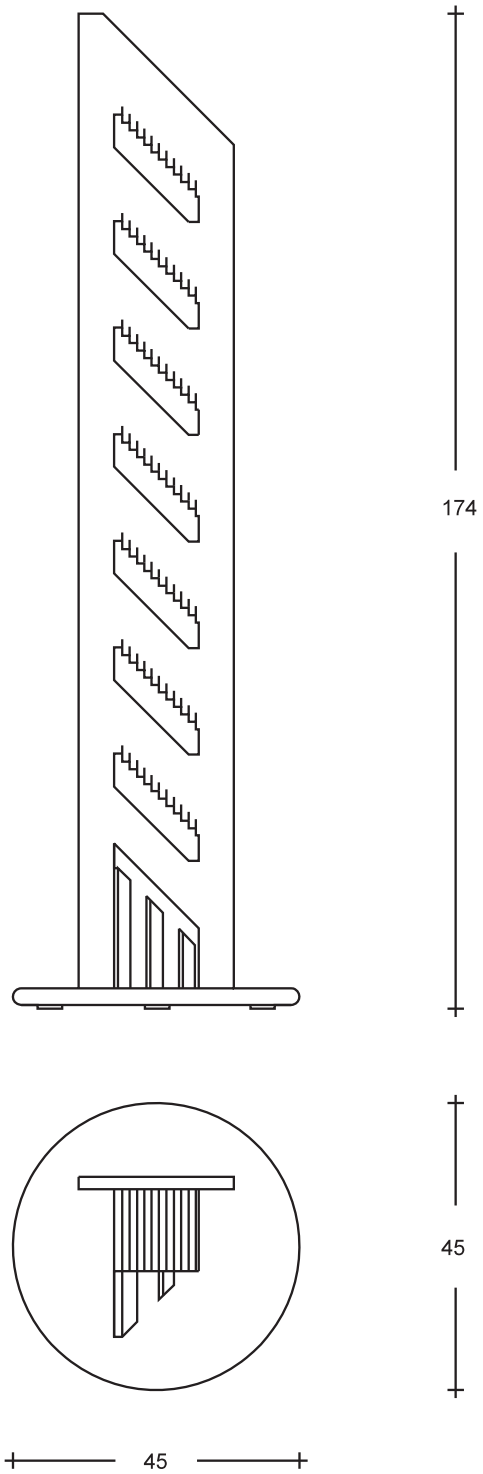

LE RAMPE

Elemento porta CD per 98 CD
CD rack for 98 CD

MASSELLO intrecciato e cristallo base verde canneto
Interlaced SOLID WOOD and crystal base verde canneto
€ 1.695,10

MASSELLO intrecciato e cristallo base blu oltremare
Interlaced SOLID WOOD and crystal base blu oltremare
€ 1.695,10

MASSELLO intrecciato e cristallo base nero
Interlaced SOLID WOOD and crystal base black
€ 1.695,10

DIAPASON

Elemento porta CD per 168 CD
CD rack for 168 CD.

Struttura in metallo verniciato nero
Particolari in NICHEL BIANCO e NERO
Pianetti multistrati - color CILIEGIO

€ 1.909,60

Black lacquered metal structure.
Particulars NICHEL WHITE and BLACK
Stratified wood planes - CHERRY colour

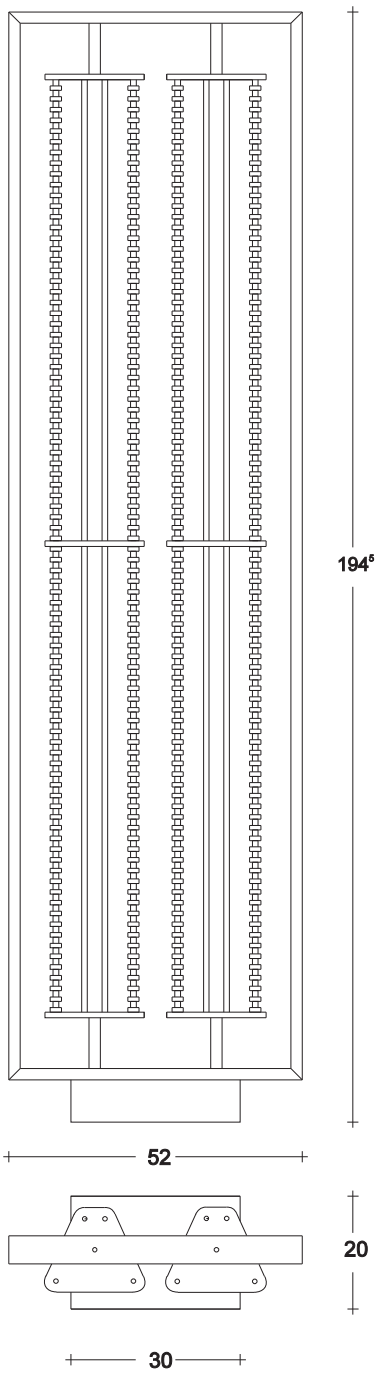

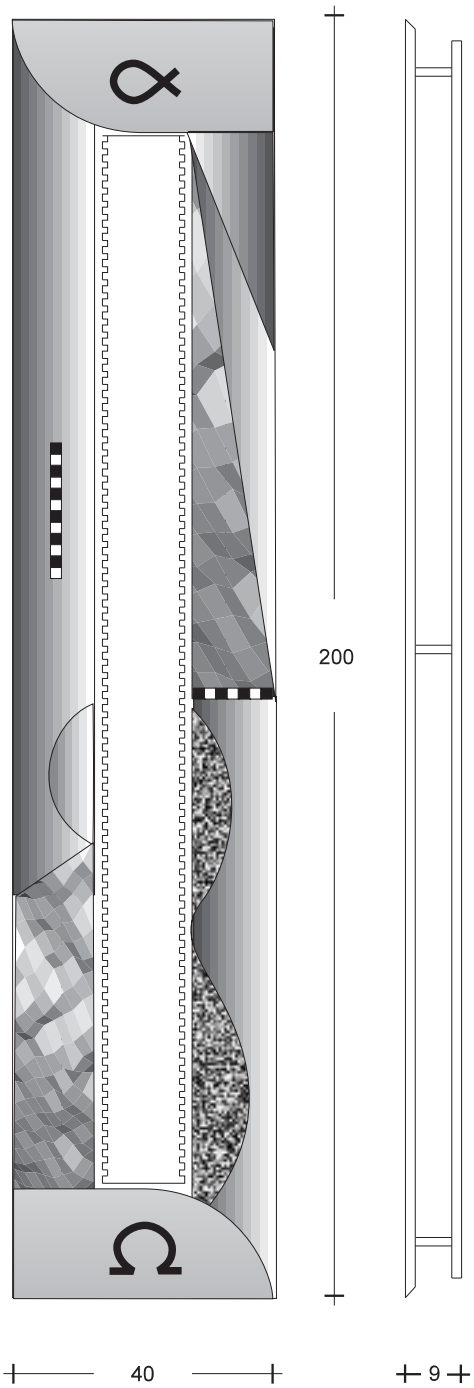

CD PICTURE

Elemento porta CD a parete per 80 CD
Wall CD rack for 80 CD

Vetro con lavorazioni a idrogetto
Pannello con intarsio in legni e radiche naturali.
Crystal fretworked by jet-water.
Woods and briers inlaid.

€ 2.263,80

COLUMBUS

Elemento porta CD per 130 CD
CD rack for 130 CD

Multistrati color NOCE - base NERO Stratified wood-WALLNUT - BLACK base	**€ 1.973,40**
Multistrati color CILIEGIO - base NERO Stratified wood - CHERRY colour - BLACK base	**€ 2.081,20**
Color ALLUMINIO - base color ALLUMINIO ALUMINIUM colour - ALUMINIUM base	**€ 2.282,50**
NERO - base NERO BLACK colour - BLACK base	**€ 2.156,00**
VIOLETTO COBALTO mix METALTITANIO	**€ 2.406,80**
ALUMINIUM mix METALTITANIO	**€ 2.406,80**
ORO FOGLIA - base METALTITANIO GOLD FOIL - Base METALTITANIO	**€ 4.092,00**

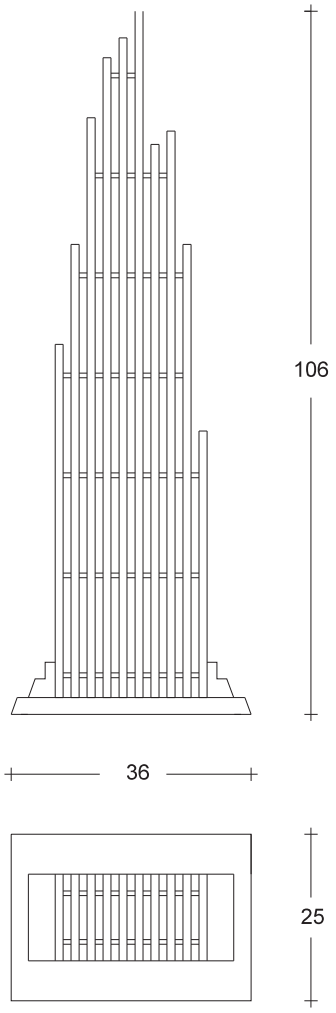

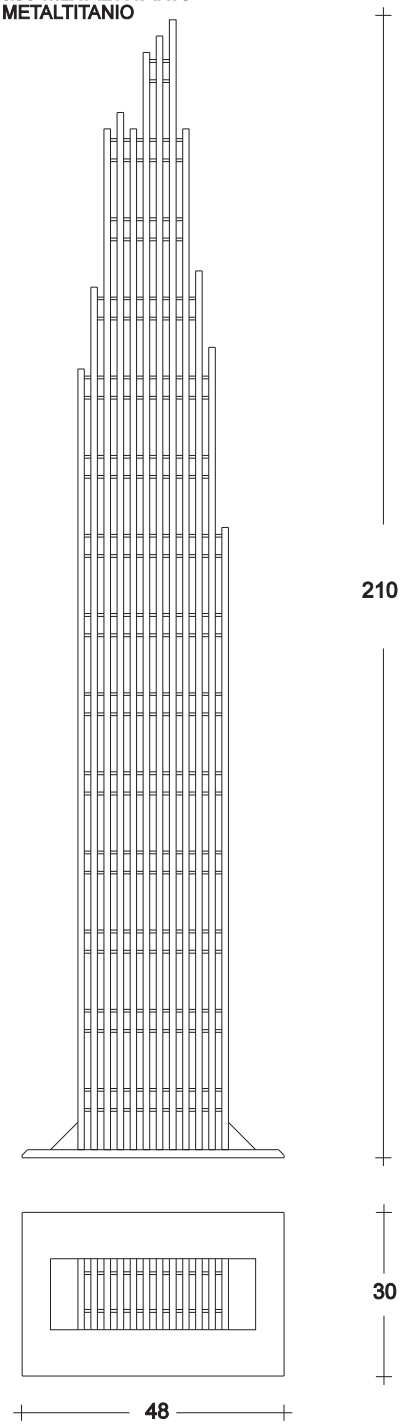

LITTLE COLUMBUS

Elemento porta CD per 48 CD
CD rack for 48 CD

Multistrati color NOCE - base BORDEAUX Stratified wood-WALLNUT - BORDEAUX base	**€ 1.043,90**
Multistrati color CILIEGIO - base BORDEAUX Stratified wood - CHERRY colour - BORDEAUX base	**€ 1.100,00**
Color ALLUMINIO - base color ALLUMINIO ALUMINIUM colour - ALUMINIUM base	**€ 1.169,30**
NERO - base NERO BLACK colour - BLACK base	**€ 1.113,20**

VISMARA DESIGN
20822 SEVESO MB (ITALY)
VIA CARDUCCI, 3
T. +39 0362503726
F. +39 0362551452
E: VISMARA@VISMARA.IT
WWW.VISMARA.IT